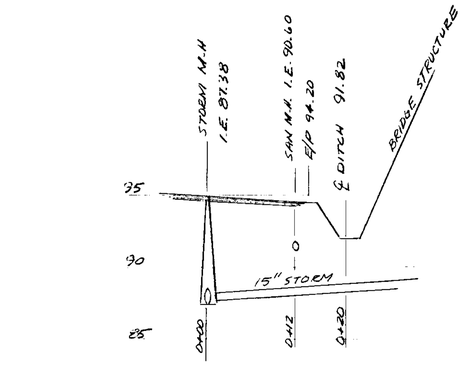

SECTION "A"

1" = 5' V
1" = 10' H

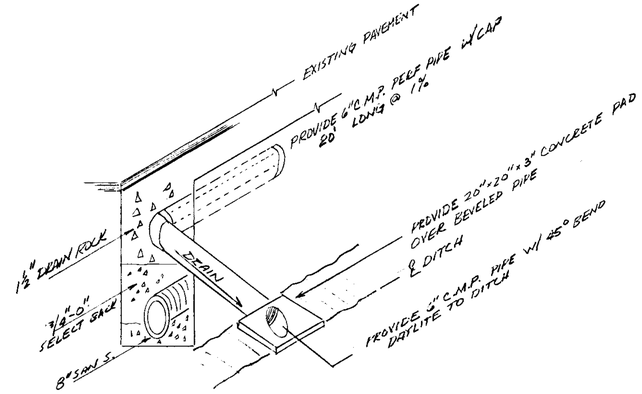

INTERSEPTOR DRAIN STA 1+49 & 4+55

N.T.S.

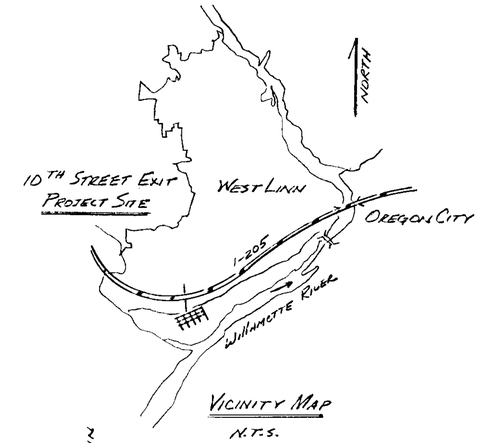

VICINITY MAP

N.T.S.

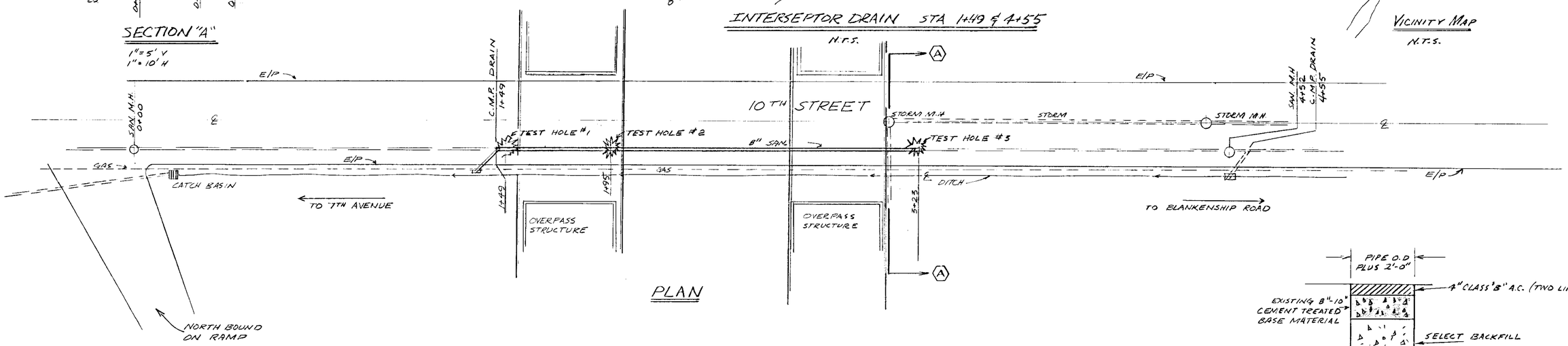

PLAN

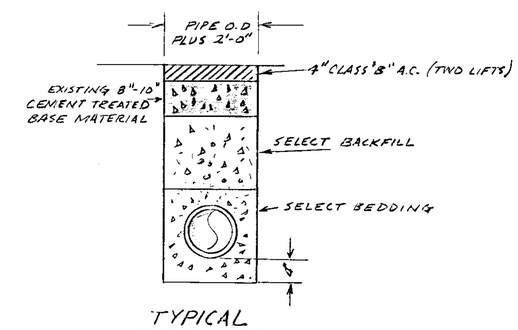

TYPICAL TRENCH SECTION

N.T.S

RELAY THIS SECTION

STATION 1+49 TO STATION 3+23 174 LIN. FEET

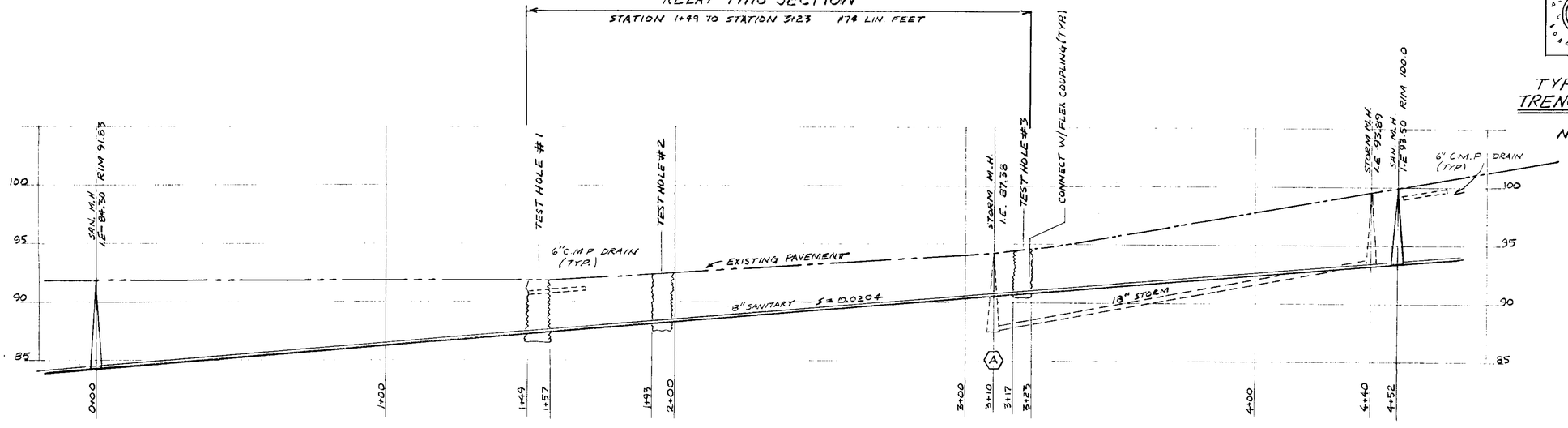

PROFILE

DATE	NO.	REVISION		
			DRAWN D.K.K. J.W.D.	
			FILE	DATE 2/81
			SCALE HOR. 1" = 20' VERT. 1" = 5'	

CITY OF WEST LINN

PUBLIC WORKS DEPARTMENT

10TH STREET
SANITARY SEWER PROJECT

PLAN & PROFILE

1/1