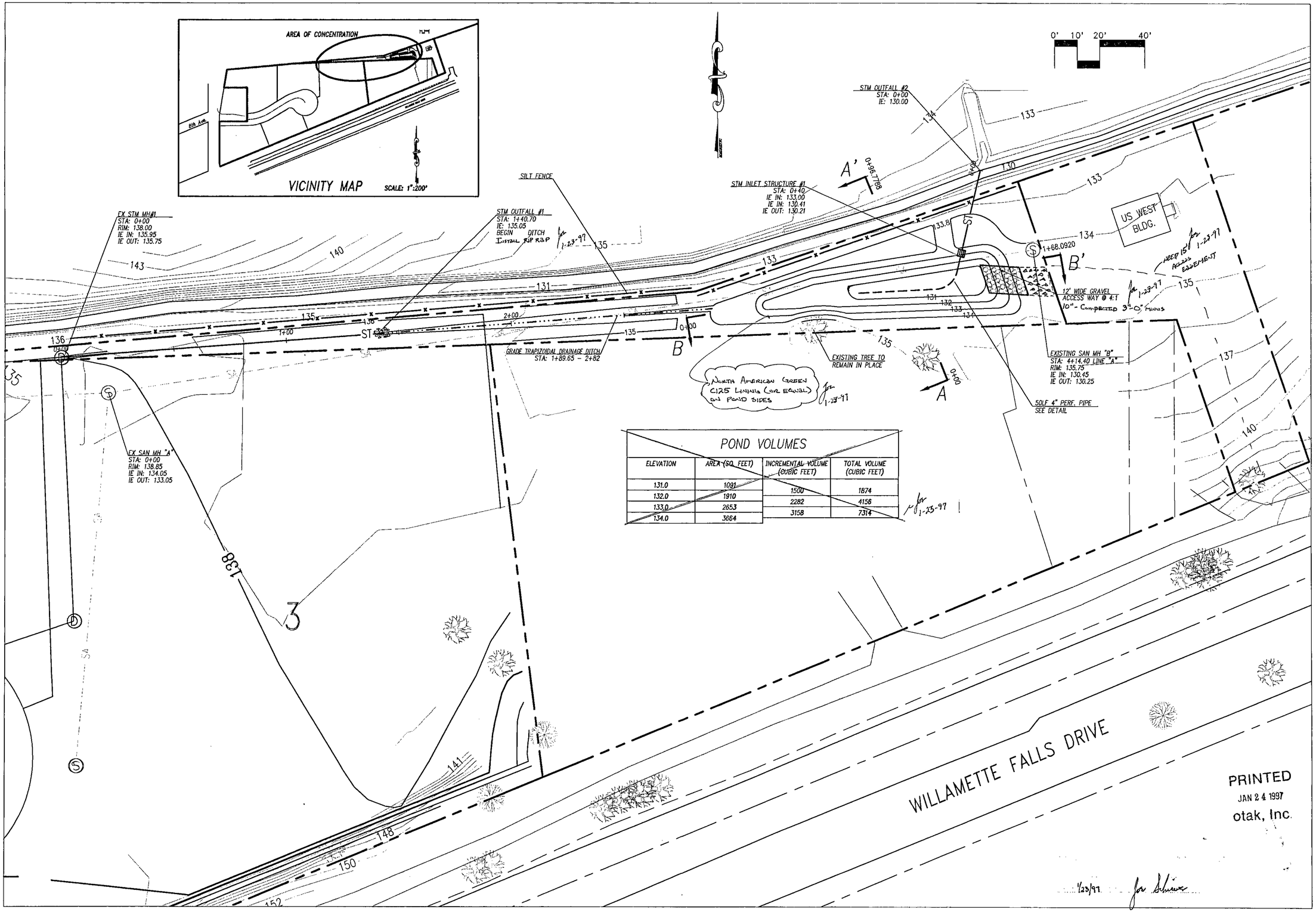

POND VOLUMES

ELEVATION	AREA (SQ. FEET)	INCREMENTAL VOLUME (CUBIC FEET)	TOTAL VOLUME (CUBIC FEET)
131.0	1091		
		1500	1874
132.0	1910		
		2282	4156
133.0	2653		
		3158	7314
134.0	3664		

MFK DESIGNED	10-25-95 DATE	
JLN DRAWN	11-2-95 DATE	
G.O.E CHECKED	11-2-95 DATE	

NO.	DATE	BY	CHK	APPD.	REVISIONS

REGISTERED PROFESSIONAL ENGINEER 17447 OREGON SEPTEMBER 28, 1984 N. FARES KEKHIA
EXPIRES JUNE 30, 1997
1-23-97

10 TH ST COMMERCIAL
DETENTION POND
CITY OF WEST LINN
OREGON

KOSS, BROD, GOODRICH & ASSOCIATES
19363 WILLAMETTE DR, #509
WEST LINN, OREGON 97068

otak Incorporated
17355 S.W. BOONES FERRY ROAD
LAKE OSWEGO, OREGON 97035
(503)635-3618
FAX (503)635-5395

SCALE: 1"=20'
DRAWING NO. D4647SWM
PROJECT NO. 4647
SHEET NO. 1/2

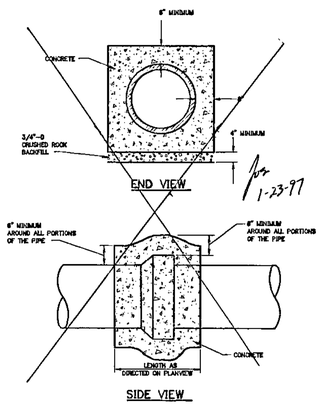

CONCRETE ENCASEMENT DETAIL

NOT TO SCALE

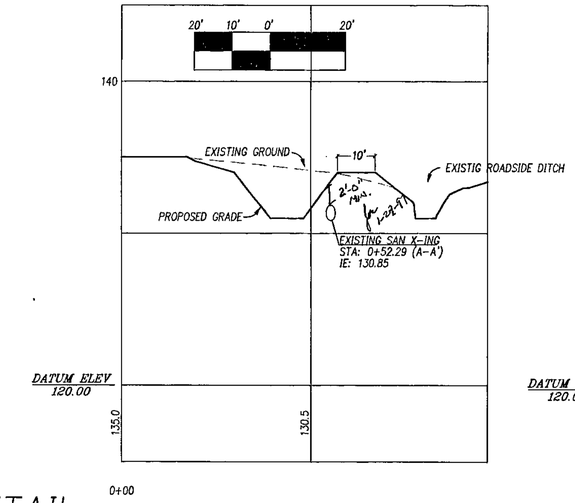

SECTION A-A'

SCALE 1":20' HORZ
1":5' VERT

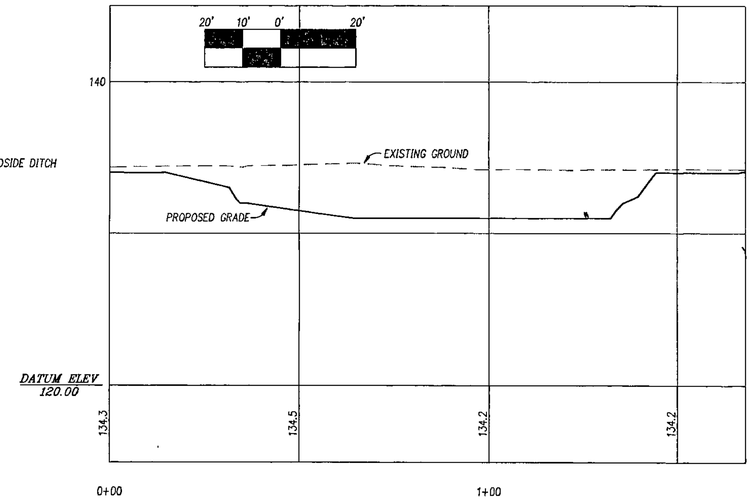

SECTION B-B'

SCALE 1":20' HORZ
1":5' VERT

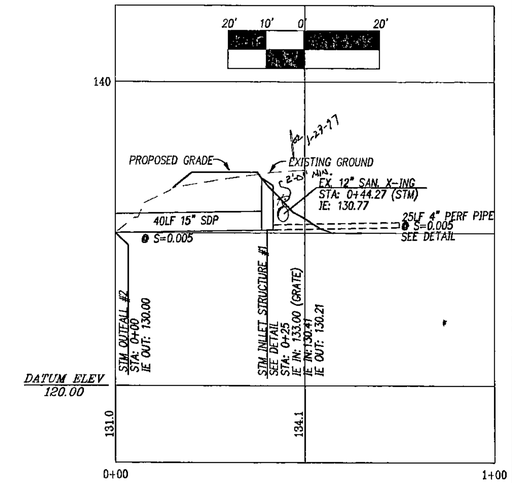

STM LINE LEAVING POND

SCALE 1":20' HORZ
1":5' VERT

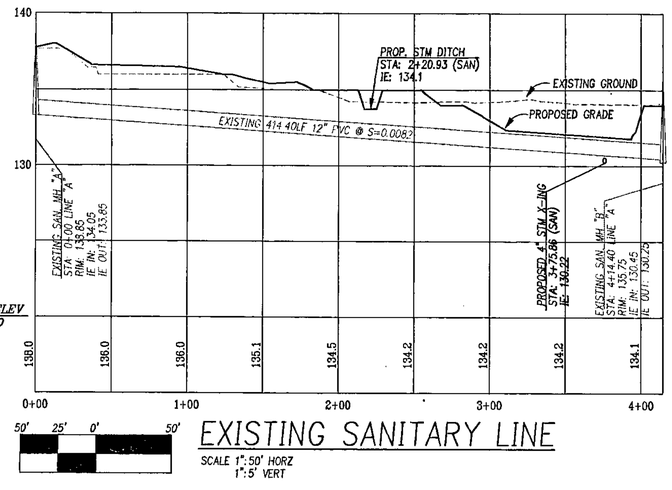

EXISTING SANITARY LINE

SCALE 1":50' HORZ
1":5' VERT

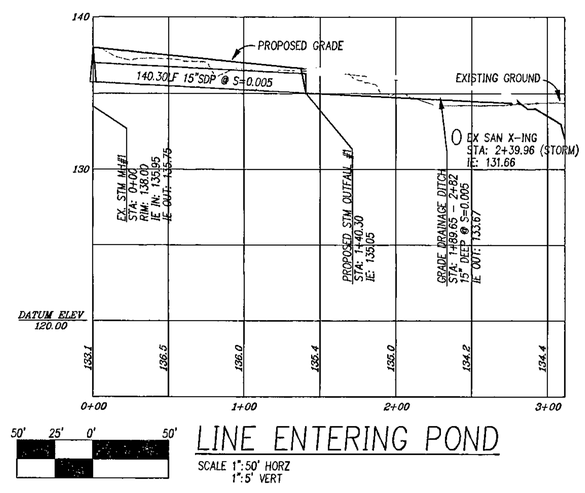

LINE ENTERING POND

SCALE 1":50' HORZ
1":5' VERT

INLET STRUCTURE DETAIL

NOT TO SCALE

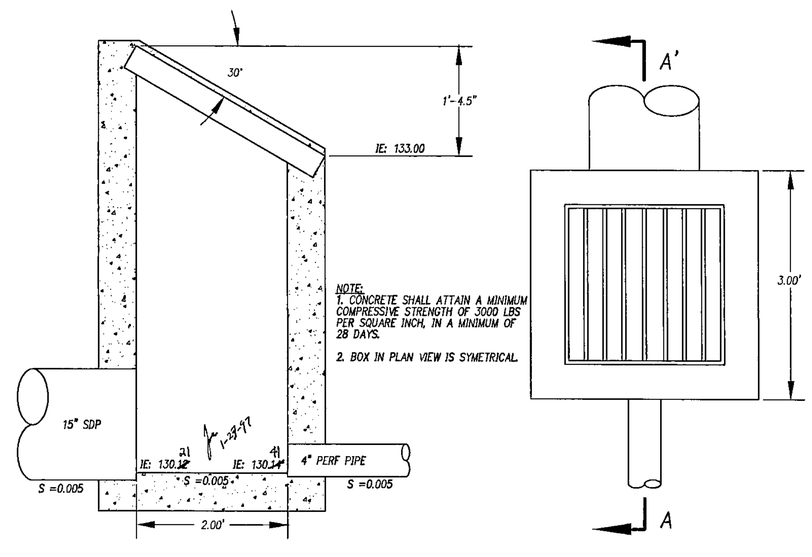

PERF PIPE DETAILS

NOT TO SCALE

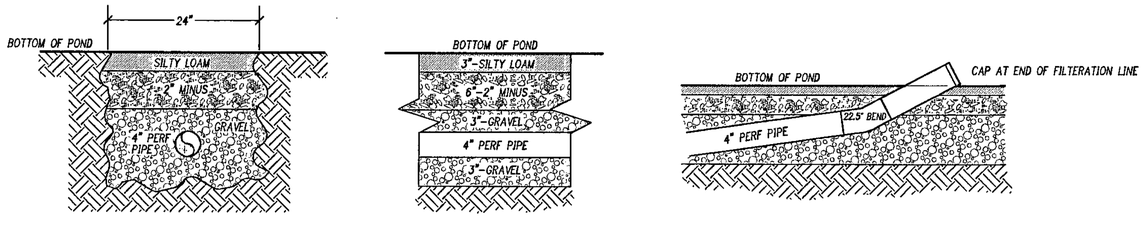

FARES DESIGNED	10-25-95 DATE
JLN DRAWN	11-2-95 DATE
G.O.F CHECKED	11-2-95 DATE

NO.	DATE	BY	CHK.	APPD.	REVISIONS

REGISTERED PROFESSIONAL ENGINEER 17447 OREGON SEPTEMBER 28, 1984 N. FARES KEKHIA
EXPIRES JUNE 30, 1997
1-23-97

10 TH ST COMMERCIAL
DETENTION POND
CITY OF WEST LINN
OREGON

KOSS, BROD, GOODRICH & ASSOCIATES
19363 WILLAMETTE DR, #509
WEST LINN, OREGON 97068

otak Incorporated
17355 S.W. BOONES FERRY ROAD
LAKE OSWEGO, OREGON 97035
(503)635-3618
FAX (503)635-5395

SCALE: AS LABLED
DRAWING NO. D4647SWM
PROJECT NO. 4647
SHEET NO. 2/2