THIS DETAIL DRAWING SHALL NOT BE ALTERED OR CHANGED IN ANY MANNER EXCEPT BY THE CITY ENGINEER. IT IS THE RESPONSIBILITY OF THE USER TO ACQUIRE THE MOST CURRENT VERSION OF THE DETAIL.

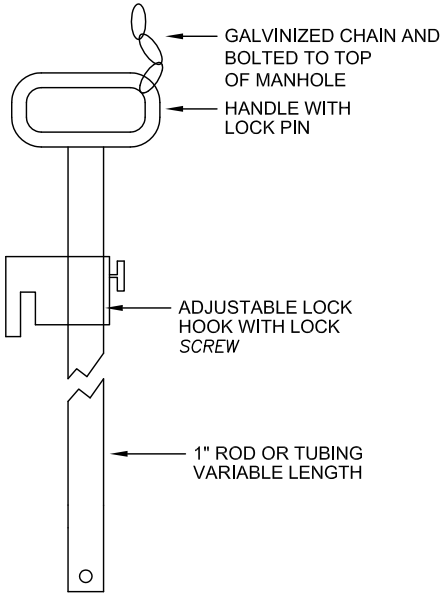

LIFT HANDLE

SCALE: NTS

ALTERNATES ARE ACCEPTABLE PROVIDED MATERIAL SPECIFICATIONS ARE MET AND FLANGE BOLT PATTERN MATCHES.

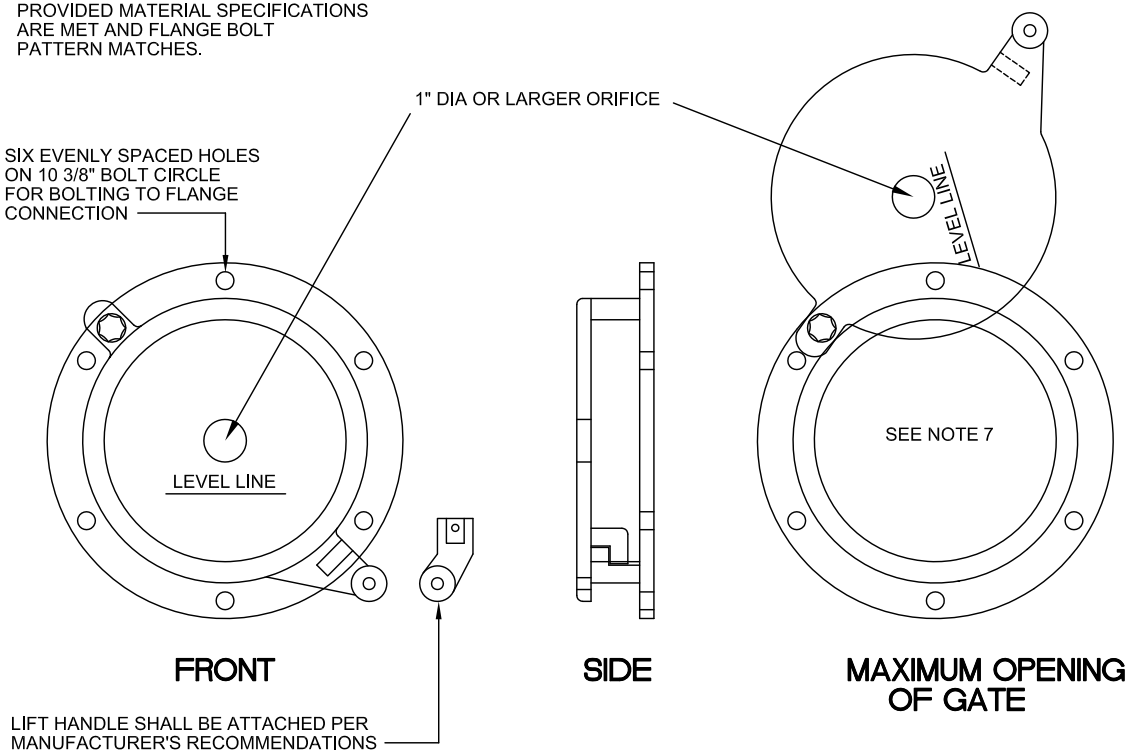

CLEANOUT/SHEAR GATE

SCALE: NTS

NOTE:

1. CLEANOUT/SHEAR GATE AND LIFT HANDLE SHALL BE ALUMINUM ALLOY PER ASTM B-26-ZG-32a.
2. LIFT HANDLE EITHER SOLID OR TUBING WITH ADJUSTABLE HOOK AS REQUIRED.
3. NEOPRENE RUBBER GASKET REQUIRED BETWEEN RISER MOUNTING FLANGE AND GATE FLANGE.
4. MATING SURFACES OF LID AND BODY TO BE MACHINED FOR PROPER FIT.
5. FLANGE MOUNTING BOLTS SHALL BE 3/8" DIAMETER STAINLESS STEEL.
6. ALTERNATE CLEANOUT/SHEAR GATES TO THE DESIGN SHOWN ARE ACCEPTABLE, PROVIDED THEY MEET THE MATERIAL SPECIFICATIONS ABOVE AND HAVE A SIX BOLT, 10 3/8" BOLT CIRCLE FOR BOLTING THE FLANGE CONNECTION.
7. GATE SHALL NOT OPEN BEYOND THE CLEAR OPENING BY LIMITED HINGE MOVEMENT, STOP TAB, OR SOME OTHER DEVICE.

CITY OF West Linn

CLEANOUT/SHEAR GATE

DATE: 2010

DRAWING NO. WL-607B

FILE NO.