THIS DETAIL DRAWING SHALL NOT BE ALTERED OR CHANGED IN ANY MANNER EXCEPT BY THE CITY ENGINEER. IT IS THE RESPONSIBILITY OF THE USER TO ACQUIRE THE MOST CURRENT VERSION OF THE DETAIL.

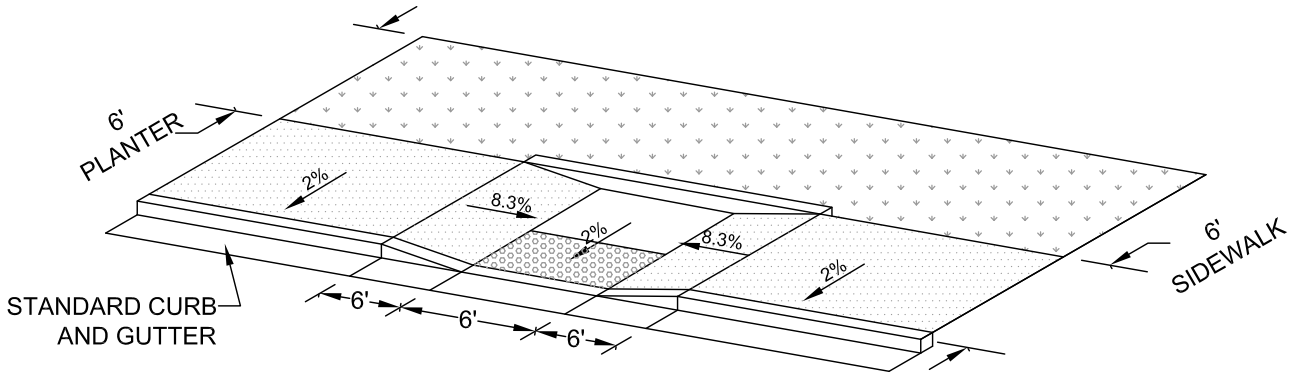

PARALLEL CURB RAMP

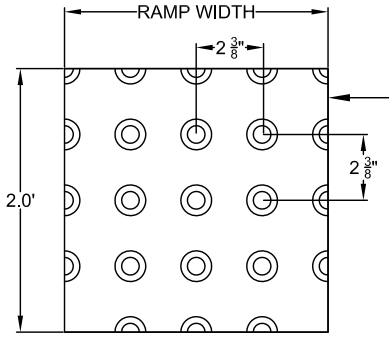

RAMP TEXTURE PATTERN DETAIL

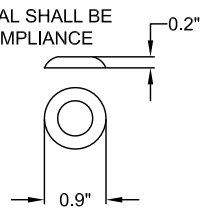

TRUNCATED DOME DETAIL

NOTE:

1. LANDING AT TOP OF RAMP SHALL NOT EXCEED 2% IN ANY DIRECTION AND SHALL BE A MINIMUM OF 60" x 60".
2. RAMP CROSS SLOPE SHALL NOT EXCEED 2% (AS MEASURED PERPENDICULAR TO PEDESTRIAN TRAFFIC FLOW).
3. TRUNCATED DOME MUST EXTEND THE FULL WIDTH OF THE RAMP AND COVER THE FIRST 2 FEET OF THE RAMP CLOSEST TO THE STREET.
4. TRANSITIONS FROM THE RAMP TO THE WALKWAY, GUTTER, AND STREET MUST BE FLUSH (LEVEL) AND FREE OF ABRUPT LEVEL CHANGES.
5. THE GUTTER OR ADJACENT ROADWAY MUST HAVE A SLOPE OF NO MORE THAN 5 PERCENT (1:20) TOWARD THE RAMP.
6. FLARED SIDES ("WING") OF THE CURB RAMP SHALL NOT EXCEED 10% IN SLOPE (8.33% IF PEDESTRIAN TRAVEL IS REQUIRED OVER THEM PER ADA STANDARDS - I.E. IF MINIMUM 48" x 48" (FOR EXISTING SITES ONLY) LANDING IS NOT PROVIDED AT TOP OF RAMP).
7. CONCRETE STRENGTH SHALL BE 3300 PSI.
8. PLACE CONTRACTION JOINTS AS SHOWN ABOVE.
9. NO ABOVE GROUND UTILITIES ARE PERMITTED WITHIN RAMP AREA.

PARALLEL CURB RAMP

CURB TIGHT

CITY OF West Linn

DATE:	2010
DRAWING NO.	WL-506C
FILE NO.	