THIS DETAIL DRAWING SHALL NOT BE ALTERED OR CHANGED IN ANY MANNER EXCEPT BY THE CITY ENGINEER. IT IS THE RESPONSIBILITY OF THE USER TO ACQUIRE THE MOST CURRENT VERSION OF THE DETAIL.

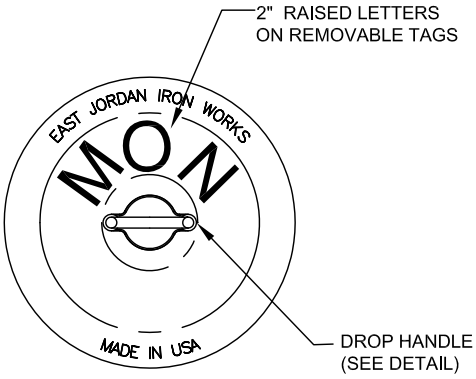

COVER FACE

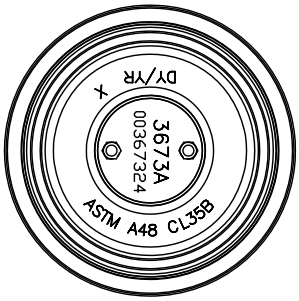

COVER BACK

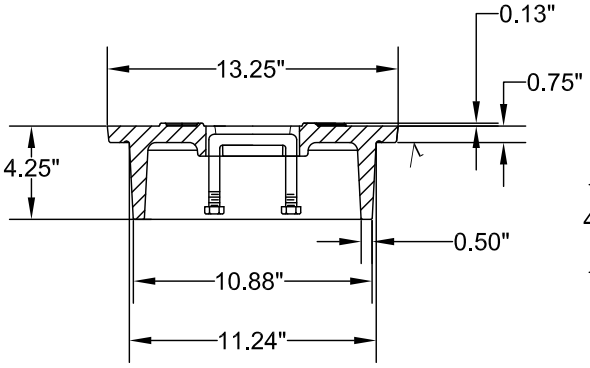

COVER SECTION

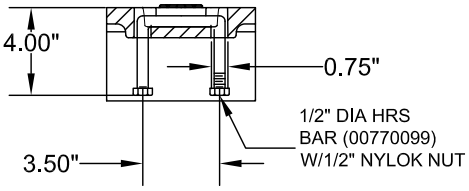

DROP HANDLE DETAIL

STANDARD 12" MONUMENT COVER
USED BY CLACKAMAS COUNTY SURVEY DEPARTMENT
WHERE SPEEDS ARE ABOVE 35 MPH

EAST JORDAN
IRON WORKS, INC.
P.O. BOX 439
EAST JORDAN, MI. 49727
1-800-874-4100
FAX: 231-536-4458

Anders Jorgenson
Oregon Sales Representative
East Jordan Iron Works
(503) 774-4144
Fax (503) 775-3263
Cell (503) 367-7925
ajorgenson@ejiw.com

12" MONUMENT BOX COVER

City of West Linn

DATE:	2010
DRAWING NO.	WL-513C
FILE NO.	