THIS DETAIL DRAWING SHALL NOT BE ALTERED OR CHANGED IN ANY MANNER EXCEPT BY THE CITY ENGINEER. IT IS THE RESPONSIBILITY OF THE USER TO ACQUIRE THE MOST CURRENT VERSION OF THE DETAIL.

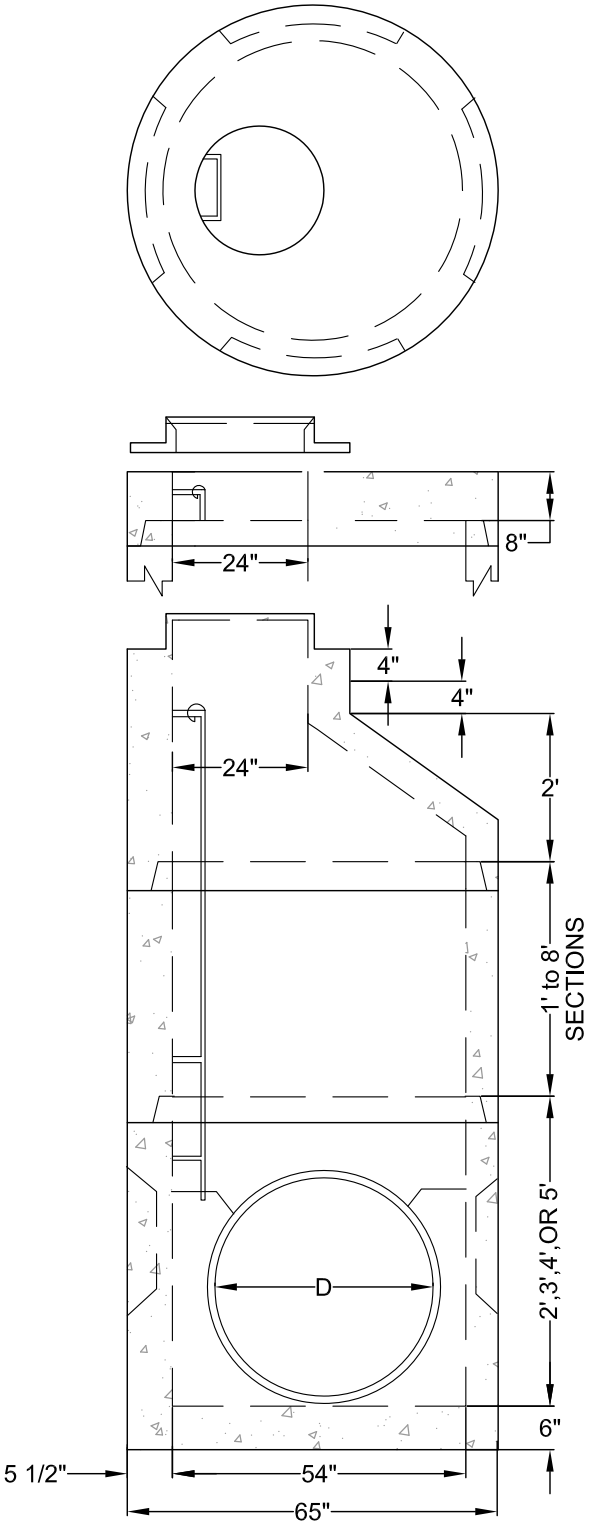

54" MANHOLE

FOR 36" DIAMETER OR SMALLER PIPE

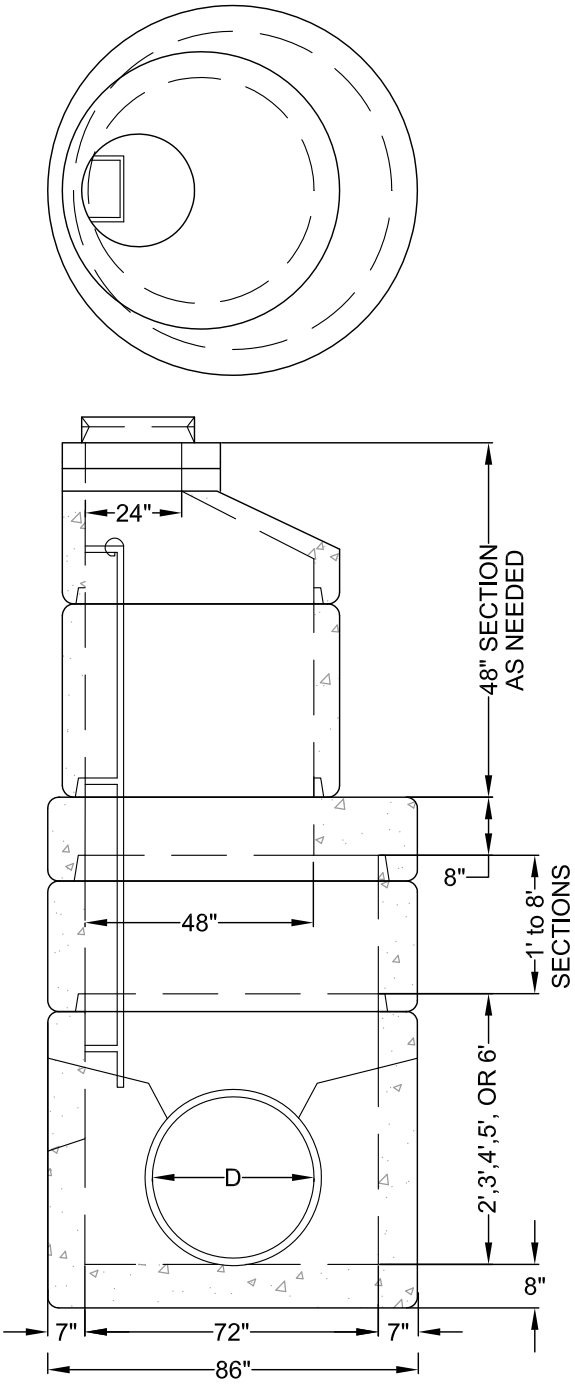

72" MANHOLE

FOR 42" DIAMETER OR SMALLER PIPE

NOTE:

STANDARD MANHOLE STEPS OR LADDERS SHALL BE INSTALLED

OVERSIZE MANHOLE

CITY OF West Linn

DATE:	2010
DRAWING NO.	WL-209
FILE NO.	