THIS DETAIL DRAWING SHALL NOT BE ALTERED OR CHANGED IN ANY MANNER EXCEPT BY THE CITY ENGINEER. IT IS THE RESPONSIBILITY OF THE USER TO ACQUIRE THE MOST CURRENT VERSION OF THE DETAIL.

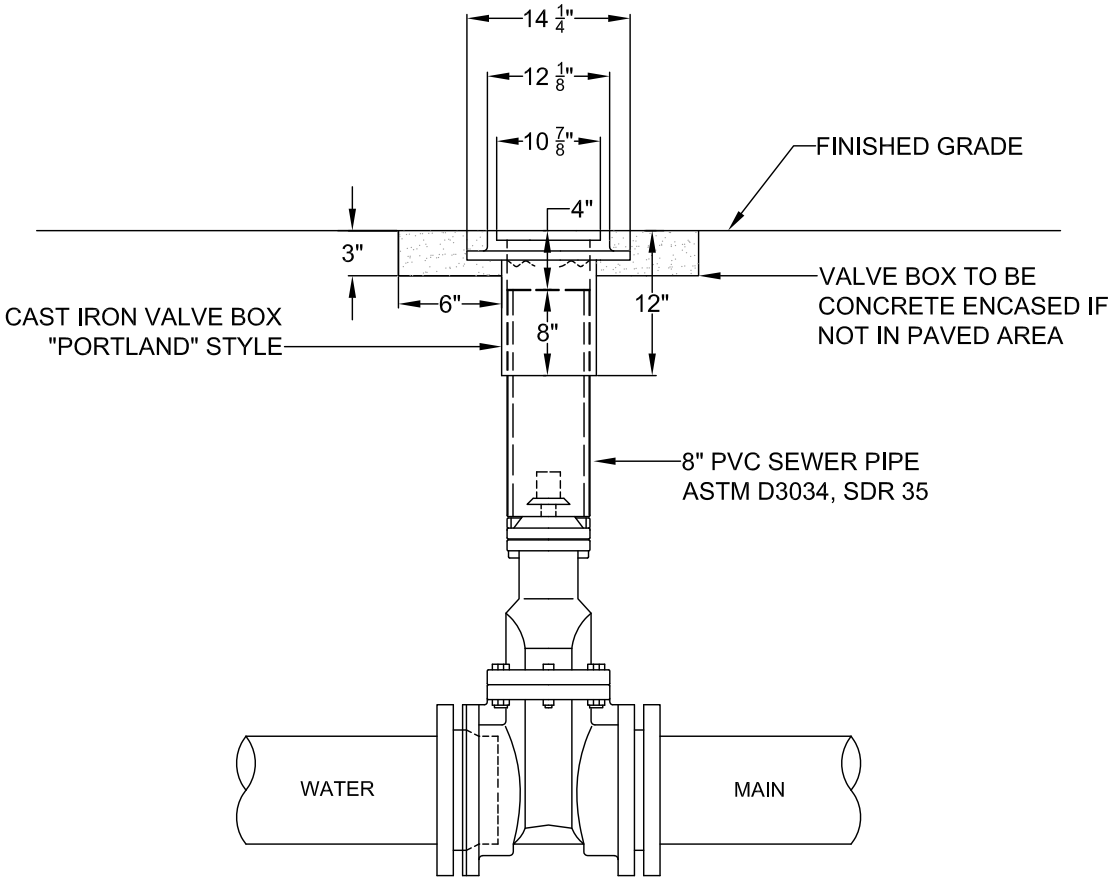

NOTE:

1. VALVE BOXES SHALL BE CENTERED DIRECTLY OVER THE VALVE NUT IN A VERTICAL POSITION.
2. VALVE BOX TOP SHALL BE ADJUSTED TO MEET FINISHED GRADE.
3. PVC SHALL BE ONE CONTINUOUS PIECE- NO BELLS OR COUPLERS.

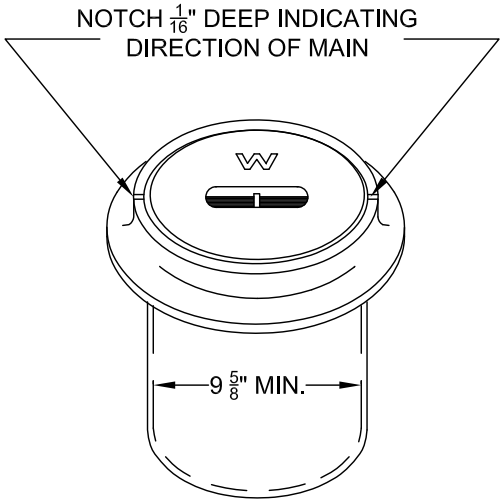

"PORTLAND" VALVE BOX

STANDARD VALVE BOX DETAIL FOR 4" OR LARGER BLOW-OFF

CITY OF West Linn

DATE:	2010
DRAWING NO.	WL-412
FILE NO.	