THIS DETAIL DRAWING SHALL NOT BE ALTERED OR CHANGED IN ANY MANNER EXCEPT BY THE CITY ENGINEER. IT IS THE RESPONSIBILITY OF THE USER TO ACQUIRE THE MOST CURRENT VERSION OF THE DETAIL.

NOTE:

1. VALVE BOX SHALL BE PER STANDARD DETAIL WL-411.
2. VALVE BOX TO BE CONCRETE ENCASED AS SHOWN, IF NOT IN PAVED AREA.
3. BLOW-OFF UNIT SHALL BE BACKFILLED WITH 3/4"-0" CRUSHED ROCK AND COMPACTED TO 95% OF MAXIMUM DENSITY DETERMINED BY AASHTO T-180.
4. PLACE BLOW-OFF STANDPIPE 3 FT. INSIDE R.O.W. LINE AT END OF STREET (2 FT FROM BARRICADE).

BLOW-OFF SIZES REQUIRED	
MAIN SIZE	BLOW-OFF SIZE
4" TO 6"	2"

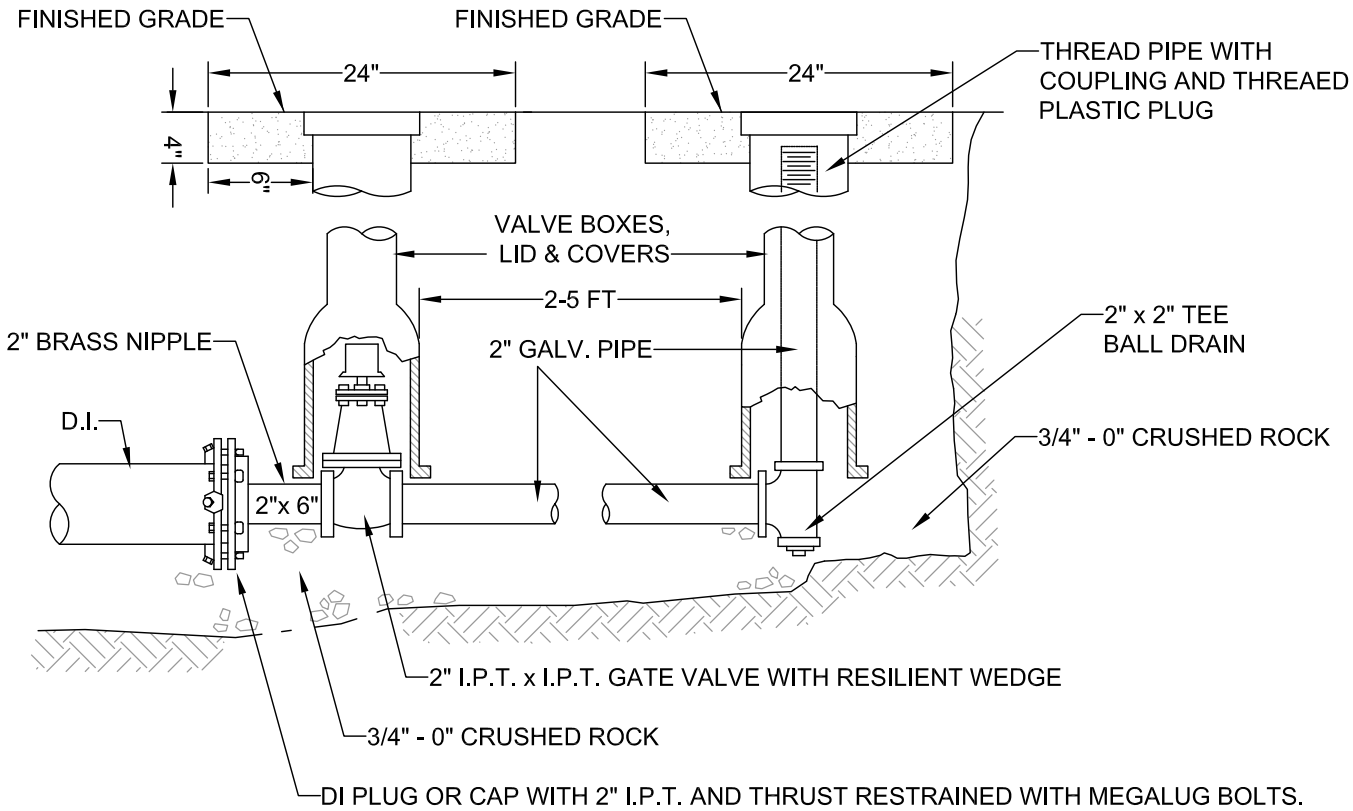

CITY OF West Linn

STANDARD 2" BLOW-OFF ASSEMBLY

DATE: 2010

DRAWING NO. WL-404A

FILE NO.