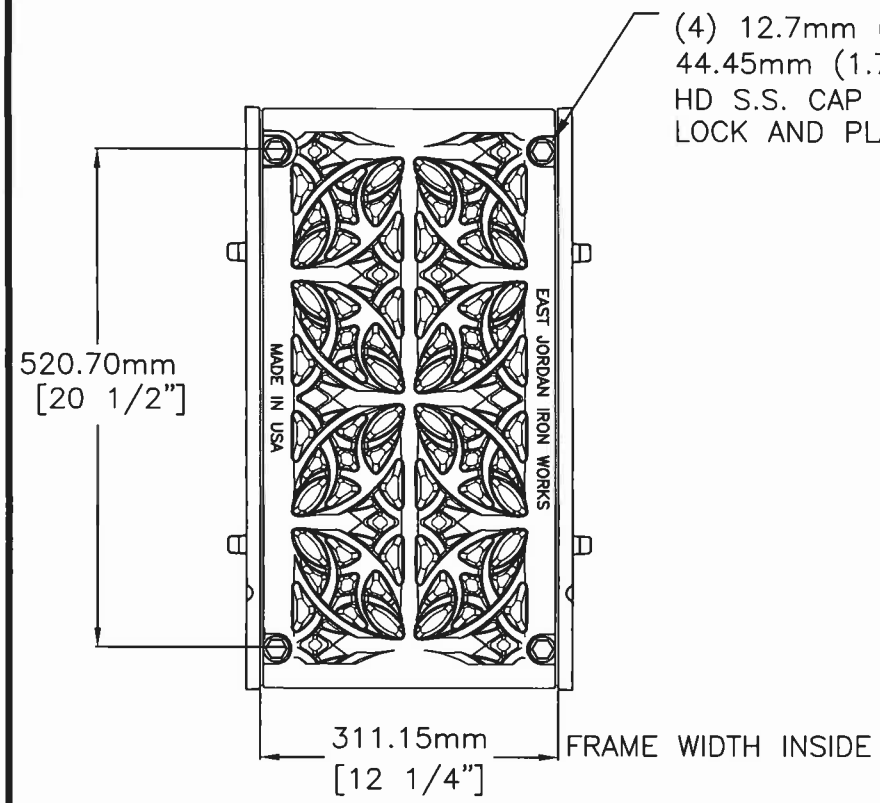

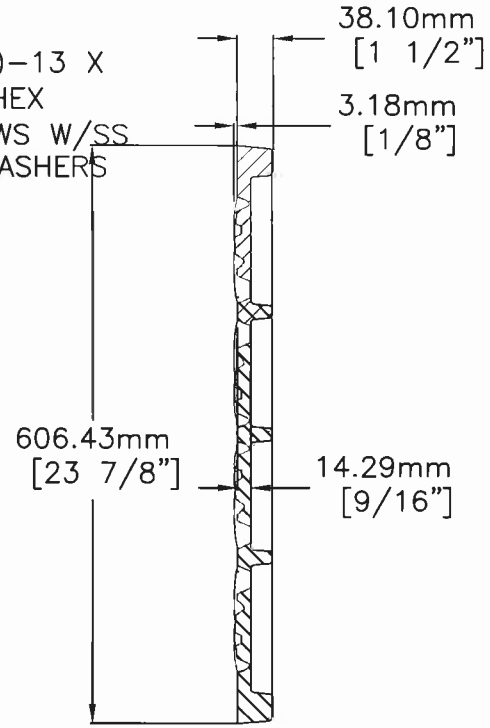

GRATE SECTION

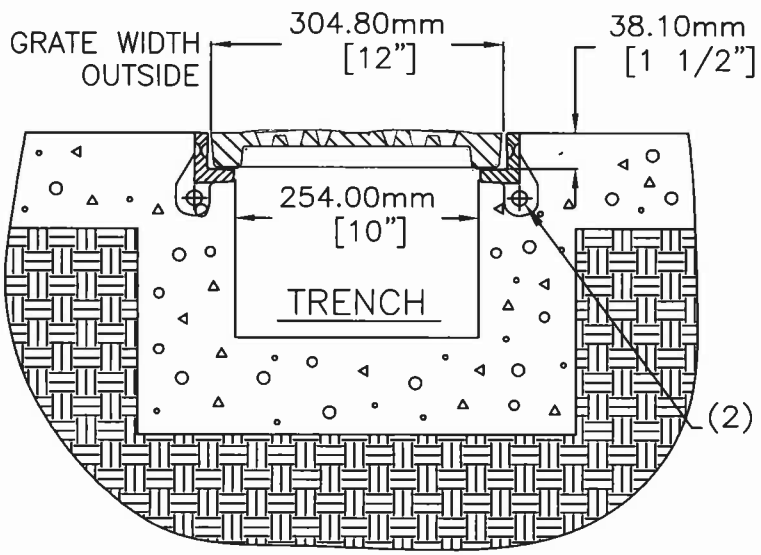

TRENCH SECTION

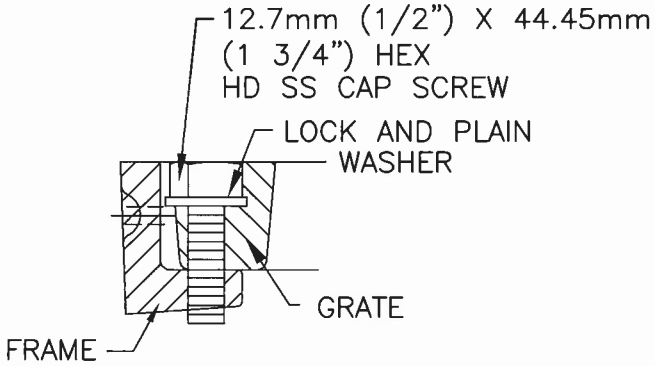

BOLT DETAIL

CAUTION: DO NOT DISASSEMBLE BOLTED GRATES AND CHECK FRAME WIDTH INSIDE BEFORE SETTING SECTIONS IN CONCRETE.

CAVANAGH
LEADERS IN ROAD FURNITURE SOLUTIONS
CAVANAGH FOUNDRY
BIRR, CO OFFALY
PHONE: 0509 20277
FAX: 0509 20954
EMAIL: sales@cavanagh.ie

DRAWN	DATE
JIJ	06/10/06

ADA TRENCH FRAME & GRATE ASSEMBLY

PRODUCT NO.
C068730001

CATALOG NO.
C6873M
6950Z1

REF. PRODUCT DRAWING
C068730033
00695024

EST. WT.
GRATE: 25 kg (55 lbs)
FRAME: 18kg/m (12 LBS/FT)

OPEN AREA
275 SQ. CM OF OPENING/m
13 SQ. INCHES OF OPENING/FT

MATERIAL
GRATE – GREY IRON
FRAME – GREY IRON

LOADING CLASS
NON–TRAFFIC
GROUP 1 A15