ROSEMONT SUMMIT II SUBDIVISION

PHASE A - 24 LOTS

CITY OF WEST LINN

SITE DEVELOPMENT PLANS

GENERAL NOTES

1. ALL CONSTRUCTION SHALL BE IN ACCORDANCE WITH THE "CITY OF WEST LINN STREET/UTILITY DESIGN AND CONSTRUCTION STANDARDS", DATED JULY 14, 1988. ALL STREET, STORM SEWER AND SANITARY SEWER CONSTRUCTION THAT IS NOT ADDRESSED IN THE CITY'S STANDARDS SHALL BE IN ACCORDANCE WITH APWA STANDARDS. ALL WATER SYSTEM CONSTRUCTION THAT IS NOT ADDRESSED IN THE CITY'S STANDARDS SHALL BE IN ACCORDANCE WITH AWWA STANDARDS. CONTRACTOR TO OBTAIN A COPY OF THE GEOTECHNICAL REPORT PREPARED FOR THIS PROJECT PRIOR TO CONSTRUCTION. REPORT BY SQUIRE ASSOCIATES DATED NOVEMBER 12, 1998.
2. PRIOR TO ANY CONSTRUCTION, LOCATIONS OF EXISTING UTILITIES SHALL BE VERIFIED BY THE CONTRACTOR. WHEN ACTUAL CONDITIONS DIFFER FROM THOSE SHOWN ON THE PLANS, THE CONTRACTOR SHALL NOTIFY THE ENGINEER PRIOR TO PROCEEDING WITH CONSTRUCTION.
3. ORGANIC AND NON-DESIRABLE MATERIALS SHALL BE REMOVED FROM THE CONSTRUCTION AREA AS DIRECTED BY THE GEOTECHNICAL ENGINEER.
4. ALL FILL AREAS SHALL BE STRIPPED OF ORGANIC MATERIAL. FILL WILL BE PLACED IN 8-INCH LAYERS AND COMPACTED TO 95 PERCENT RELATIVE MAXIMUM DENSITY ACCORDING TO AASHTO T-99 STANDARDS. BASE ROCK IN THE STREET SHALL BE COMPACTED TO THE SAME STANDARD. LANDSCAPE AREAS SHALL BE COMPACTED TO 90 PERCENT. THE CONTRACTOR SHALL PROVIDE DENSITY TESTING, ONE FOR EVERY 10,000 SQUARE FEET OF AREA AND FOR EVERY 2 LAYERS OR 16" AND EVERY 100 LINEAR FEET OF FILL PLACED. COMPACTION REPORTS FROM A NATIONALLY ACCREDITED TESTING LAB SHALL BE SUPPLIED TO THE ENGINEER.
5. CONTRACTOR SHALL LEAVE ALL AREAS OF THE PROJECT FREE OF DEBRIS AND UNUSED CONSTRUCTION MATERIALS.
   a. AREAS TO BE LANDSCAPED SHALL BE SMOOTHED AND LEFT TO THE GRADES INDICATED ON THE GRADING PLAN, PLUS OR MINUS 0.1 FOOT.
   b. ALL DISTURBED AREAS NOT TO BE LANDSCAPED SHALL BE SEEDED PER EROSION CONTROL NOTES ON SHEET 5 TO PREVENT EROSION.
6. ANY CHANGES FROM THE APPROVED PLANS SHALL BE REQUESTED BY THE CONTRACTOR IN WRITING. THE DESIGN ENGINEER AND THE CITY OF WEST LINN'S PROJECT ENGINEER MUST APPROVE THE CHANGE PRIOR TO ITS IMPLEMENTATION. COMPLEXITY OF MODIFICATION WILL DETERMINE IF REVISED PLANS ARE REQUIRED.
7. STANDARD SIDEWALK RAMPS SHALL BE CONSTRUCTED IN ACCORDANCE WITH APWA DRAWING 206.
8. THE FOLLOWING CITY OF WEST LINN DETAILS SHALL BE USED AS SPECIFIED IN THE PLANS:
   STANDARD MANHOLE - DWG. NO. MH-209
   SHALLOW MANHOLE - DWG. NO. MH-210
   MANHOLE FRAME & COVER - DWG. NO. MH-212
   GUTTER INLET 2 1/2 A - DWG. NO. GI-214
   GUTTER INLET COVER - DWG. NO. GI-215
   CURB AND GUTTER - DWG. NO. CG-265
   CONCRETE SIDEWALK - DWG. NO. CS-270
   SIDEWALK RAMP - APWA DWG. NO 206
   PEDESTRIAN PATH - DWG. NO. PP-272
   STREET BARRICADE TYPE III - DWG. NO. SB-276
   PIPE BEDDING & BACKFILL DETAILS - DWG. NO. PB-280
   FIRE HYDRANT - ENCLOSED DETAIL
   BLOWOFF - ENCLOSED DETAIL
   THRUST BLOCKING - DWG. NO. TB-302
   WATER METER - DWG. NO. WM-304
   PIPE ANCHOR DETAIL DWG NO. APWA.0017.DWG
   CLEAN OUT - APWA DWG. 303
   CENTERLINE SURVEY MONUMENT - DWG. NO. 278
9. DURING CONSTRUCTION, ALL EROSION CONTROL MEASURES SHALL CONFORM TO CLACKAMAS COUNTY EROSION CONTROL STANDARDS AND WILL BE STRICTLY ENFORCED.
10. ALL AGGREGATE MATERIAL SHALL CONFORM TO APWA STANDARDS.
11. IN CASE OF A DISCREPANCY BETWEEN THE DRAWINGS AND THE FIGURES WRITTEN THEREON, THE FIGURES SHALL BE DEEMED TO GOVERN.
12. THE OWNER WILL SUPPLY ONE SET OF STAKES FOR EACH CONSTRUCTION OPERATION AS DESCRIBED IN THE CONTRACT DOCUMENTS AND SPECIFICATIONS. THE CONTRACTOR SHALL DESIGNATE A REPRESENTATIVE OR REPRESENTATIVES WHO ARE AUTHORIZED TO REQUEST STAKES. STAKING REQUESTS FROM AUTHORIZED REPRESENTATIVE SHALL BE MADE TO DAVE LIDEN AT OTAK (699-2401) AT LEAST 24 HOURS IN ADVANCE OF THE NEED FOR SAID STAKES. ONLY REQUESTS FROM AUTHORIZED REPRESENTATIVES WILL BE HONORED. ANY RESTAKING WILL BE DONE AT THE EXPENSE OF THE CONTRACTOR.
13. ALL PUBLIC CONSTRUCTION SHALL BE INSPECTED BY AN OREGON REGISTERED ENGINEER. THE CITY WILL NOT AUTHORIZE WORK TO BEGIN ON PUBLIC IMPROVEMENTS WITHOUT THE DESIGNATION OF AN INSPECTING ENGINEER BY THE OWNER OR DEVELOPER.
14. WEEK DAY WORK HOURS ARE 7 AM TO 6 PM; SATURDAY, SUNDAY, AND HOLIDAY WORK HOURS ARE LIMITED TO 9 AM TO 6 PM.
15. A SURVEY MONUMENT SHALL BE INSTALLED IN A BOX AT THE INTERSECTION OF ROSEMONT ROAD AND WILD ROSE DRIVE.

STORM/SANITARY SEWERS:

16. MANHOLE CONSTRUCTION SHALL BE IN ACCORDANCE WITH THE CITY OF WEST LINN'S STANDARD PLANS.
17. TRENCH BACKFILL IN PAVED AREAS WILL BE 3/4-INCH TO 0-INCH CRUSHED ROCK COMPACTED TO 95 PERCENT RELATIVE MAXIMUM DENSITY, AASHTO T-99.
18. ALL SANITARY SEWER AND ALL STORM PIPE SHALL BE MATERIALS IN ACCORDANCE WITH CITY OF WEST LINN SPECIFICATIONS D-3034. FOR STORM MAINS, USE "UTLRA-RIB" PVC CONFORMING TO ASTM F-794 AND THE CITY OF WEST LINN SPECIFICATIONS.
19. SANITARY SEWER SERVICES SHALL BE 4" PVC WITH A MINIMUM SLOPE OF 2%. STORM SEWER SERVICES SHALL BE 6" WITH A MINIMUM SLOPE OF 2%.
20. PRIOR TO ACCEPTANCE, ALL PUBLIC SANITARY SEWERS SHALL BE TV, PRESSURE, AND DEFLECTION TESTED IN ACCORDANCE WITH THE CITY OF WEST LINN'S REQUIREMENTS. ALL PUBLIC STORM STORM SEWERS SHALL BE TV AND DEFLECTION TESTED. ALL TESTS TO BE COMPLETED AND APPROVED PRIOR TO CONNECTION TO THE CITY SYSTEM.
21. MANHOLE RIM ELEVATIONS SHOWN ARE APPROXIMATE AND FOR INFORMATION ONLY. FINAL ELEVATIONS SHALL BE SET TO MATCH CONSTRUCTED FINISH GRADE.

WATERLINES:

22. ALL WATER PIPE AND FITTINGS SHALL BE DUCTILE IRON CLASS 52 AND CONFORM TO STANDARD CITY SPECIFICATIONS AND DETAILS.
23. WATERLINES SHALL BE PRESSURE TESTED FOLLOWING COMPLETION. PRESSURE TESTS AT THE LOWEST POINT IN TEST SECTION SHALL BE IN ACCORDANCE TO THE CITY OF WEST LINN'S STANDARDS WITH A MINIMUM TEST PRESSURE OF 180 PSI. WHEN THE PRESSURE TEST IS PERFORMED, THE TEST PRESSURE OF 180 PSI SHALL STABILIZE BEFORE THE TEST BEGINS. SERVICE LINE'S WILL ALSO BE TESTED TO THE METER LOCATION IF INSTALLED BY THE CONTRACTOR.
24. PRIOR TO BEING PLACED INTO SERVICE, THE WATERLINE SHALL BE FLUSHED, STERILIZED AND FLUSHED AGAIN ALL IN ACCORDANCE WITH STANDARD METHODS OF THE HEALTH DIVISION, DEPARTMENT OF HUMAN RESOURCES, STATE OF OREGON.
25. PRIOR TO CONNECTION TO EXISTING WATERLINE, A SAMPLE SHALL BE TAKEN AND TESTED FOR BACTERIOLOGICAL QUALITY. RESULTS MUST BE WITHIN STANDARDS OF THE STATE OF OREGON.
26. CONCRETE THRUST BLOCKING SHALL BE PROVIDED AT ALL WATERLINE FITTINGS AS REQUIRED BY CITY STANDARDS. BLOCKING SHALL BE POURED AGAINST UNDISTURBED EARTH AND CLEAR OF JOINT ACCESSORIES. BEARING AREA OF THRUST BLOCK SHALL BE COMPUTED ON THE BASIS OF ALLOWABLE SOIL BEARING PRESSURE. ALL PIPE FITTINGS IN CONTACT WITH CONCRETE SHALL BE WRAPPED IN PLASTIC.
27. MINIMUM COVER OVER WATERLINES IS TO BE 36" AS MEASURED FROM FINISH GRADE TO TOP OF PIPE. MINIMUM VERTICAL SEPARATION BETWEEN WATERLINE AND SANITARY SEWER AT A CROSSING IS 18". SANITARY SEWER AT WATERLINE CROSSINGS WITH LESS THAN THE MINIMUM VERTICAL SEPARATION SHALL BE CONSTRUCTED OF DUCTILE IRON PIPE WITH WATERTIGHT JOINTS. IN SUCH CASES THE 18-FOOT LENGTH OF SANITARY SEWER SHALL BE CENTERED AT THE CROSSING.
28. ALL WATER SERVICES SHALL BE SEPARATED BY A MINIMUM HORIZONTAL DISTANCE OF 2' AT THE MAINLINE.

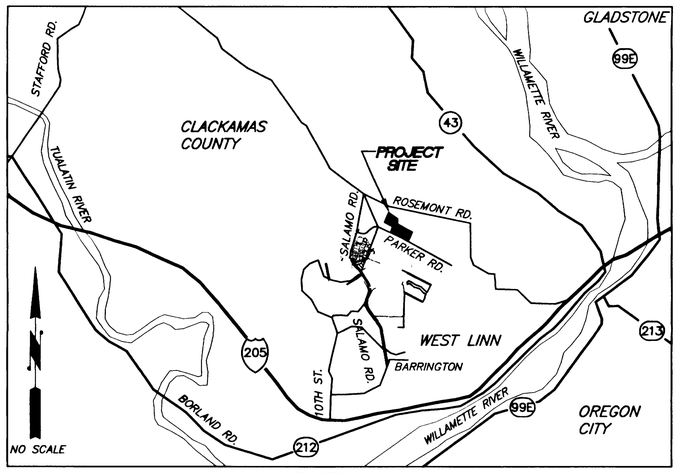

VICINITY MAP

PROJECT MAP

NOT TO SCALE

SHEET INDEX

LEGEND

PROPOSED		EXISTING	
	ROW/PROPERTY LINE	W	EXISTING WATER LINE
	EASEMENT		EXISTING EDGE OF PAVEMENT
	LOT LINE		EXISTING 2' CONTOUR
SS	PROPOSED SANITARY LINE		EXISTING 10' CONTOUR
SD	PROPOSED STORM LINE	T	EXISTING TELEPHONE MANHOLE
W	PROPOSED WATER LINE		EXISTING WATER LINE
SD	PROPOSED PRIVATE STORM LINE	G	EXISTING GAS LINE
	PROPOSED STORM MANHOLE	T	EXISTING TELEPHONE LINE
	PROPOSED CATCH BASIN	E	EXISTING ELECTRIC LINE
	PROPOSED SANITARY MANHOLE		
	GATE VALVE		
	BLOW OFF		
	FIRE HYDRANT		
	WATER METER		
	PROPOSED PRIVATE CLEAN OUT		
XX	SILT FENCE		
	SIDEWALK		
	STREET LIGHT		
	STREET BARRICADE TYPE III		
	AIR RELEASE		
	PERPENDICULAR CURB RAMP		
	PARALLEL CURB RAMP		

BENCH MARK

BENCH MARK: CITY OF WEST LINN BENCH MARK "B" IS 93.5' EAST AND 17.0' SOUTH OF EDGE OF PAVEMENT FROM 5-WAY INTERSECTION OF ROSEMONT/SANTA ANA. 3" CAP ON PIPE WITH YELLOW WATER WORKS LID. ELEV.= 667.22.

LOCATING EXISTING UTILITIES

--- 48 HOUR NOTICE REQUIRED PRIOR TO EXCAVATION ---

ONE CALL SYSTEM
(GENERAL TELEPHONE, NORTHWEST NATURAL GAS, U.S. WEST, U.S. SPRINT) 246-6699

PORTLAND GENERAL ELECTRIC 643-5454, EXT. 312, 313, 314

TCI CABLE TELEVISION 243-7491

REPAIR EMERGENCIES

NORTHWEST NATURAL GAS 226-4211, EXT. 4413

CITY OF WEST LINN
WATER OPERATIONS
SANITARY SEWER OPERATIONS 656-3535

THE CONTRACTOR, IN LOCATING AND PROTECTING UNDERGROUND UTILITIES, MUST COMPLY WITH THE REGULATIONS OF O.R.S. 757.541 TO 757.571

ATTENTION EXCAVATORS: Oregon law requires you to follow rules adopted by the Oregon Utility Notification Center. Those rules are set forth in OAR 952-001-0010 through OAR 952-001-0090. You may obtain copies of these rules from the Center by calling (503) 232-1987. If you have any questions about the rules, you may contact the call Center. YOU MUST NOTIFY THE CENTER AT LEAST 2 BUSINESS DAYS, BUT NOT MORE THAN 10 BUSINESS DAYS, BEFORE COMMENCING AN EXCAVATION. CALL (503) 246-6699.

"AS-BUILT"

DATE 6/7/00 BY UJK

These As-built Plans were compiled from survey data, data collected from others, and periodic observation during construction. It is suggested that these plans be used in conjunction with field verification of location and elevations of improvements in question. These plans are an accurate record of public improvements to the best of my information, knowledge and belief.

Signature

6/7/00
Date

3/31/00
Date
M.F.K.
Designed
R.K./G.S.
Drawn
M.F.K 6/7/00
Checked By Date

REGISTERED PROFESSIONAL ENGINEER 17487 OREGON SEPTEMBER 28, 1984 M. FARES KEKHIA
EXPIRES JUNE 30, 2001

KOSS REAL ESTATE
1098 S. ROSEMONT
WEST LINN, OR 97068
Phone: (503) 557-1144
Fax: (503) 557-1294

ROSEMONT SUMMIT II SUBDIVISION
PHASE A
CITY OF WEST LINN, OREGON
COVER SHEET

otak Incorporated
17355 SW Boones Ferry Rd.
Lake Oswego, Oregon 97035
Phone: (503) 635-3618
FAX: (503) 635-5395

L9754
Project No.
D754AB01
File No.
1
Sheet No.

Copyright 1999 ©

AS-BUILT SET 6/07/00

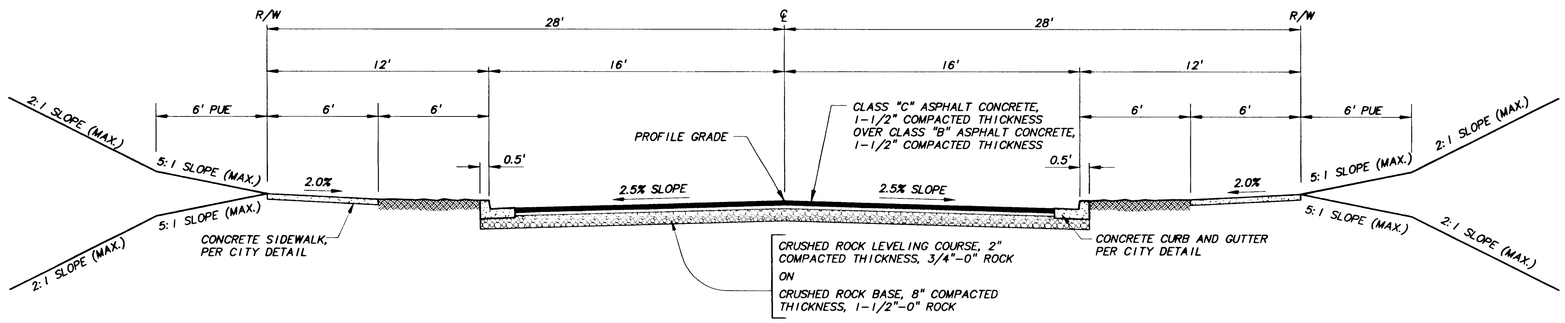

32' ROAD

WILD ROSE DRIVE
ROXBURY DRIVE

DECISION

Based on the applicant's response to the approval criteria, staff finds there are sufficient grounds for the Planning Director and City Engineer to approve the application with the following conditions of approval.

1. The applicant shall dedicate sufficient right-of-way on the north side of Parker Road to provide total right-of-way width of 60 feet, and provide half-street improvements plus a travel lane for Parker Road for the entire frontage of the site. These improvements will include a six-foot sidewalk, six-foot planter strip, curb, gutter, 18 feet of half-street, and street lights. All other improvements shall be provided as shown on the submittal dated 2-23-99. Roadway sections shall conform to City minor arterial requirements.

2. The applicant shall provide a water quality pond at the southeast corner of the site. This water quality swale shall be accessible by a gravel driveway at least 12 feet wide and contained within a 20-foot wide easement or dedication. This shall be for the use of the City Public Works Department in order to maintain the swale.

3. The applicant shall design and provide adequate right of way in the eastern half of lot one to accommodate the construction of West Ridge Drive curving in a northwesterly direction onto the Kilkenny property.

4. The grading plan shall be modified to comply with CDC Section 85.200(E) standards, including the prohibition on fill at over 50% slope unless a report by an engineer demonstrates to the City Engineer that site conditions (on a lot by lot basis) demonstrate the propriety of other standards. The grading plan shall also meet the Uniform Building Code standards of Sections 3313 and 3314. Lots 5-8 shall provide a 5% minimum slope for their building areas to reduce fill and embankment height per page A-155.

5. The applicant shall provide two 10-foot wide utility easements for water from West Ridge Drive to benefit the Morton property south of lots 5-8. One easement shall be centered on the side lot line between lots 5 and 6. The second easement shall be centered on the side lot line between lots 7 and 8.

6. All of the street names shall be changed to use non- directional, non-topographic names and names not already used, or names not similar to those used in West Linn, subject to approval by the Planning Director.

7. The stormwater computations used to size the detention and water quality facilities shall be revised and resubmitted to the City. The detention and water quality pond shall be modified as required by City standards.

8. Water quality and detention facilities shall be constructed prior to final platting of the site. There shall be no direct discharge into the Parker Road drainage system without first passing through a water quality treatment facility. An all-weather service drive (14 feet wide) and access easement shall be provided to allow access by City workers to the detention facility. This design shall meet the City Engineer's and Planning Director's approval.

9. The applicant shall review the discharge of stormwater from Parker Road onto private property near Westview Drive and confirm that impacts are mitigated to the satisfaction of the City Engineer.

10. The applicant shall make waterline connections to the Rosemont I Subdivision at Westview Drive, to the Parker Road 18-inch water transmission line and shall extend the waterlines east and north terminus of West Ridge Drive. The applicant shall extend the 18-inch water line along Parker Road to the southwest edge of the subdivision.

11. The sanitary sewer system for both Rosemont Summit I and II Subdivisions shall connect to the new sanitary sewer main, which will be constructed within Parker Road. The sewer pipe shall be extended to the north terminus of West Ridge Drive.

12. Erosion control measures per CDC Section 85.160(F)(2) shall be in place prior to and during all site clearing, grubbing, and development. The applicant shall take additional efforts as necessary to maintain the erosion control measures because of the relatively steep topography of the site.

13. Phase A will be completed by 2001 and Phase B will be completed subsequently, along with Parker Road improvements.

14. Turnarounds per Tualatin Valley Fire Department standards shall be installed within 150 feet of the terminus of the east and west stub-outs of West Ridge Drive.

I/We declare to have no interest in the outcome of this decision due to some past or present involvement with the applicant, the subject property, or surrounding properties, and therefore, can render an impartial decision. The provisions of the Community Development Code Chapter 99 have been met.

8-16-99
DATE
DAN DRENTLAW, Planning Director

8-16-99
DATE
DAVE MONSON, City Engineer

Appeals to this decision must be filed with the West Linn Planning Department within 14 days of the date of mailing. Appeal cost is $250 and must include specific grounds or basis for appeal.

Mailed this 16th day of August, 1999.

Sep-07-99 03:07P p.02

otak

FILE 09754 A/P

September 7, 1999

Peter Spir
City of West Linn - Planning
PO Box 651
West Linn, OR 97068

Re: *Street Names / Rosemont Summit II Subdivision — Otak Project No. 09754*

Dear Peter:

It is my understanding that you have approved of the following street names for Rosemont Summit II Subdivision. The north/south street is to be named ***WILD ROSE DRIVE***. The east/west street is to be named ***ROXBURY DRIVE***. The cul-de-sac off of Roxbury Drive is to be named ***ROXBURY COURT***. Please indicate your approval in the space provided and fax a copy of this letter to Otak at 635-5395. If you have questions please call me at 699-4587.

The City of West Linn approves of the above street names for Rosemont Summit II.

Peter Spir - City Planning — 9/8/99 Date

Sincerely,

Otak, Incorporated

Scott Shumaker/sda

Scott Shumaker, EIT

SAS:sda

c: Herb Koss - Koss Real Estate, Habib Matin - Emerald Development, Gary Paul - Otak Survey

17355 sw boones ferry road
lake oswego, oregon 97035-5217
(503) 635-3618
fax (503) 635-5395
www.otak.com

ARCHITECTURE
ENGINEERING
LANDSCAPE ARCHITECTURE
PLANNING
SURVEYING & MAPPING
URBAN DESIGN

"AS-BUILT"
DATE 6/7/00 BY WJK

3/31/00
Date
M.F.K.
Designed
R.K.
Drawn
MFK 6/7/00
Checked By Date

REGISTERED PROFESSIONAL ENGINEER 17447 FOREGON SEPTEMBER 28, 1984 M. FARES KERMIA
EXPIRES JUNE 30, 2001

KOSS REAL ESTATE
1098 S. ROSEMONT
WEST LINN, OR 97068
Phone: (503) 557-1144
Fax: (503) 557-1294

ROSEMONT SUMMIT II SUBDIVISION
PHASE A
CITY OF WEST LINN, OREGON

TYPICAL STREET SECTIONS
CONDITIONS OF APPROVAL

otak
Incorporated
17355 SW Boones Ferry Rd.
Lake Oswego, Oregon 97035
Phone: (503) 635-3618
FAX: (503) 635-5395

L9754
Project No.
D754AB02
File No.
2
Sheet No.
Copyright 1999 ©

AS-BUILT SET 6/07/00

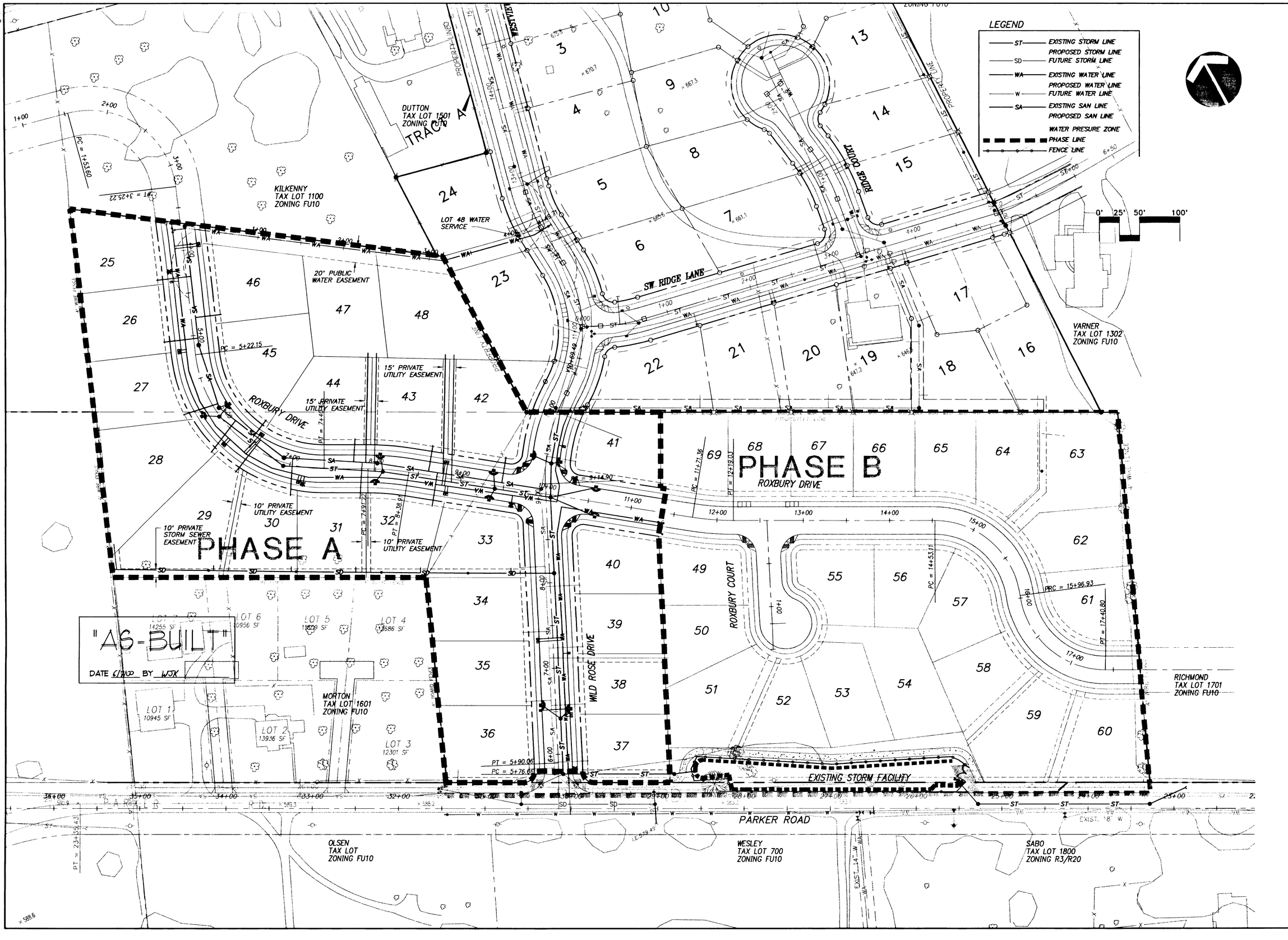

3/31/00
Date
M.F.K.
Designed
R.K./G.S.
Drawn
M.F.K 6/7/00
Checked By Date

REGISTERED PROFESSIONAL ENGINEER 17447 OREGON SEPTEMBER 28, 1984 M. FARES KERHIA
EXPIRES JUNE 30, 2001

KOSS REAL ESTATE
1098 S. ROSEMONT
WEST LINN, OR 97068
Phone: (503) 557-1144
Fax: (503) 557-1294

ROSEMONT SUMMIT II SUBDIVISION
PHASE A
CITY OF WEST LINN, OREGON

COMPOSITE UTILITY PLAN

otak Incorporated
17355 SW Boones Ferry Rd.
Lake Oswego, Oregon 97035
Phone: (503) 635-3618
FAX: (503) 635-5395

L9754
Project No.
D754AB03
File No.
3
Sheet No.
Copyright 1999 ©

AS-BUILT SET 6/07/00

10/18/1999 2:51pm--> D754SC03.DWG

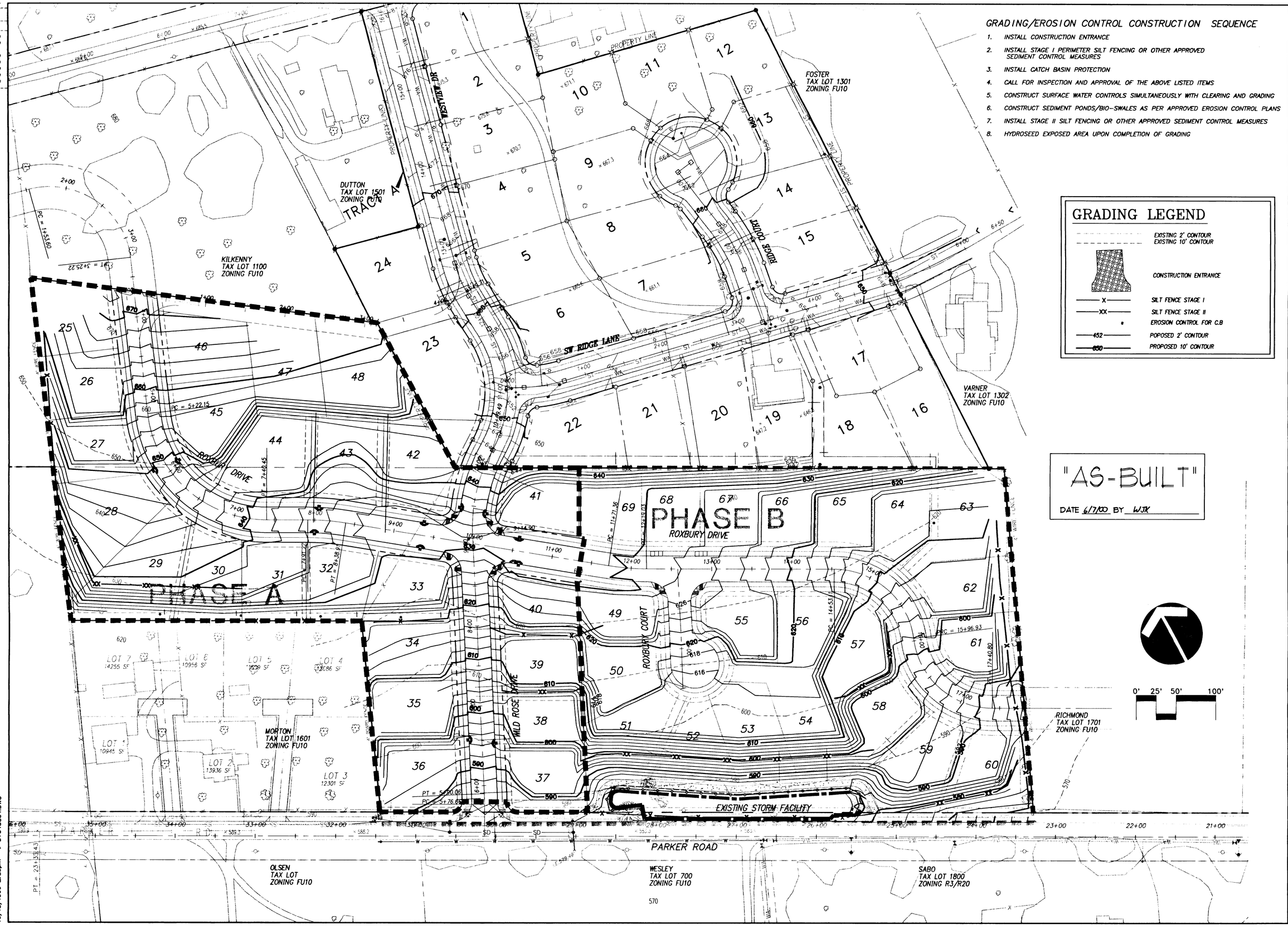

GRADING/EROSION CONTROL CONSTRUCTION SEQUENCE

1. INSTALL CONSTRUCTION ENTRANCE
2. INSTALL STAGE I PERIMETER SILT FENCING OR OTHER APPROVED SEDIMENT CONTROL MEASURES
3. INSTALL CATCH BASIN PROTECTION
4. CALL FOR INSPECTION AND APPROVAL OF THE ABOVE LISTED ITEMS
5. CONSTRUCT SURFACE WATER CONTROLS SIMULTANEOUSLY WITH CLEARING AND GRADING
6. CONSTRUCT SEDIMENT PONDS/BIO-SWALES AS PER APPROVED EROSION CONTROL PLANS
7. INSTALL STAGE II SILT FENCING OR OTHER APPROVED SEDIMENT CONTROL MEASURES
8. HYDROSEED EXPOSED AREA UPON COMPLETION OF GRADING

GRADING LEGEND

	EXISTING 2' CONTOUR
	EXISTING 10' CONTOUR
	CONSTRUCTION ENTRANCE
—X—	SILT FENCE STAGE I
—XX—	SILT FENCE STAGE II
•	EROSION CONTROL FOR C.B
—452—	POPOSED 2' CONTOUR
—650—	PROPOSED 10' CONTOUR

"AS-BUILT"

DATE 6/7/00 BY WJK

Date	3/31/00
Designed	M.F.K.
Drawn	R.K./G.S.
Checked By	MFK 6/7/00 Date

REGISTERED PROFESSIONAL ENGINEER 17447 OREGON SEPTEMBER 28, 1984 M. FARES KERHIA

EXPIRES JUNE 30, 2001

KOSS REAL ESTATE
1098 S. ROSEMONT
WEST LINN, OR 97068
Phone: (503) 557-1144
Fax: (503) 557-1294

ROSEMONT SUMMIT II SUBDIVISION
PHASE A
CITY OF WEST LINN, OREGON

GRADING AND EROSION CONTROL PLAN

otak Incorporated
17355 SW Boones Ferry Rd.
Lake Oswego, Oregon 97035
Phone: (503) 635-3618
FAX: (503) 635-5395

L9754
Project No.
D754AB04
File No.
4
Sheet No.

Copyright 1999 ©

AS-BUILT SET 6/07/00

EROSION CONTROL GENERAL NOTES

APPROVAL OF THIS EROSION/SEDIMENTATION CONTROL (ESC) PLAN DOES NOT CONSTITUTE AN APPROVAL OF PERMANENT ROAD OR DRAINAGE DESIGN (E.G. SIZE AND LOCATION OF ROADS, PIPES, RESTRICTORS, CHANNELS, DETENTION FACILITIES, UTILITIES, ETC.).

THE IMPLEMENTATION OF THESE ESC PLANS AND THE CONSTRUCTION, MAINTENANCE, REPLACEMENT, AND UPGRADING OF THESE ESC FACILITIES IS THE RESPONSIBILITY OF THE APPLICANT/CONTRACTOR UNTIL ALL CONSTRUCTION IS COMPLETED AND APPROVED AND VEGETATION/LANDSCAPING IS ESTABLISHED.

THE BOUNDARIES OF THE CLEARING LIMITS SHOWN ON THIS PLAN SHALL BE CLEARLY FLAGGED IN THE FIELD PRIOR TO CONSTRUCTION. DURING THE CONSTRUCTION PERIOD, NO DISTURBANCE BEYOND THE FLAGGED CLEARING LIMITS SHALL BE PERMITTED. THE FLAGGING SHALL BE MAINTAINED BY THE APPLICANT/CONTRACTOR FOR THE DURATION OF CONSTRUCTION.

THE ESC FACILITIES SHOWN ON THIS PLAN MUST BE CONSTRUCTED IN CONJUNCTION WITH ALL CLEARING AND GRADING ACTIVITIES, AND IN SUCH A MANNER AS TO INSURE THAT SEDIMENT LADEN WATER DOES NOT ENTER THE DRAINAGE SYSTEM OR VIOLATE APPLICABLE WATER STANDARDS.

THE ESC FACILITIES SHOWN ON THIS PLAN ARE THE MINIMUM REQUIREMENTS FOR ANTICIPATED SITE CONDITIONS. DURING THE CONSTRUCTION PERIOD, THESE ESC FACILITIES SHALL BE UPGRADED AS NEEDED FOR UNEXPECTED STORM EVENTS AND TO ENSURE THAT SEDIMENT-LADEN WATER DOES NOT LEAVE THE SITE.

THE ESC FACILITIES SHALL BE INSPECTED DAILY BY THE APPLICANT/CONTRACTOR AND MAINTAINED AS NECESSARY TO ENSURE THEIR CONTINUED FUNCTIONING.

THE ESC FACILITIES ON INACTIVE SITES SHALL BE INSPECTED AND MAINTAINED A MINIMUM OF ONCE A MONTH OR WITHIN THE 24 HOURS FOLLOWING A STORM EVENT.

AT NO TIME SHALL MORE THAN ONE FOOT OF SEDIMENT BE ALLOWED TO ACCUMULATE WITHIN A TRAPPED CATCH BASIN. ALL CATCH BASINS AND CONVEYANCE LINES SHALL BE CLEANED PRIOR TO PAVING. THE CLEANING OPERATION SHALL NOT FLUSH SEDIMENT LADEN WATER INTO THE DOWNSTREAM SYSTEM.

STABILIZED CONSTRUCTION ENTRANCES SHALL BE INSTALLED AT THE BEGINNING OF CONSTRUCTION AND MAINTAINED FOR THE DURATION OF THE PROJECT. ADDITIONAL MEASURES MAY BE REQUIRED TO INSURE THAT ALL PAVED AREAS ARE KEPT CLEAN FOR THE DURATION OF THE PROJECT.

EROSION CONTROL AND POLLUTION CONTROL MEASURE

EROSION CONTROL MEASURES FOR DISTURBED AREAS:

ALL DISTURBED SLOPES GREATER THAN 3:1 HAVE BEEN GRADED AND COMPACTED PRIOR TO OCTOBER 1ST SHALL BE HYDROSEEDED USING THE FOLLOWING SPECIFICATIONS:

SEEDING SHALL NOT BE DONE DURING WINDY WEATHER OR WHEN THE GROUND IS FROZEN, EXCESSIVELY WET OR OTHERWISE UNTILLABLE.

SEED MAY BE DOWN BY THE FOLLOWING METHOD:

HYDROSEEDED WHICH UTILIZED WATER AS THE CARRYING AGENT, AND MAINTAINS CONTINUOUS AGITATION THROUGH PADDLE BLADES. IT SHALL HAVE AN OPERATING CAPACITY SUFFICIENT TO AGITATE, SUSPEND AND MIX INTO A HOMOGENEOUS SLURRY OF THE SPECIFIED AMOUNT OF SEED AND WATER OR OTHER MATERIAL. DISTRIBUTION AND DISCHARGE LINES SHALL BE LARGE ENOUGH TO PREVENT STOPPAGE AND SHALL BE EQUIPPED WITH A SET OF HYDRAULIC DISCHARGE SPRAY NOZZLES WHICH WILL PROVIDE A UNIFORM DISTRIBUTION OF THE SLURRY.

GRASS SHALL BE SEEDED AT THE RATE OF NOT LESS THAN ONE HUNDRED THIRTY (130) POUNDS PER ACRE. SEED MIX SHALL INCLUDE:

STATE HIGHWAY ROADSIDE SEEDING MIX.

FERTILIZER SHALL BE APPLIED AT THE RATE OF 300 POUNDS PER ACRE.

NITROGEN	-	22%
PHOSPHORIC ACID	-	16%
SOLUBLE POTASH	-	8%

WOOD CELLULOSE FIBER SHALL BE APPLIED AT THE RATE OF ONE AND ONE (1-1/2) TONS PER ACRE.

THE EXACT TIME FOR SEEDING WILL BE DETERMINED BY ACTUAL WEATHER CONDITIONS. THE NORMAL SATISFACTORY PERIOD FOR SEEDING SHALL BE CONSIDERED BETWEEN MARCH 1 TO JUNE 1 AND SEPTEMBER 1 TO OCTOBER 1 UNLESS OTHERWISE AUTHORIZED BY THE OWNER EXCEPT THAT CONTRACTOR MAY PERFORM SEEDING OPERATIONS FROM JUNE 1 TO SEPTEMBER 1 PROVIDED THAT HE WATERS THE NEW GRASS TO THE SATISFACTION OF THE OWNER.
WHEN DELAYS IN OPERATIONS CARRY THE WORK BEYOND THE MOST FAVORABLE PLANTING SEASON, OR WHEN WEATHER CONDITIONS ARE SUCH THAT SATISFACTORY RESULTS ARE NOT LIKELY TO BE OBTAINED FOR ANY STAGE OF THE SEEDING OPERATIONS, THE CONTRACTOR WILL STOP THE WORK AND IT SHALL BE RESUMED ONLY WHEN THE DESIRED RESULTS ARE LIKELY TO BE OBTAINED. IF OPERATIONS EXTEND PAST OCTOBER 1 ALTERNATE HAY PLACEMENT AND SPRING SEEDING SHALL BE SUBSTITUTED.

THE CONTRACTOR SHALL PROTECT ALL SEEDED AREAS FROM EROSION UNTIL FINAL INSPECTION AND ACCEPTANCE HAS BEEN MADE. AREAS DAMAGED BY EROSION SHALL BE REPAIRED BY THE CONTRACTOR AT HIS OWN EXPENSE.

ALL DISTURBED AREAS WITH SLOPES LESS THAN 3:1 THAT HAVE BEEN GRADED AND COMPACTED SHALL BE SEEDED PRIOR TO OCTOBER 1, WITH THE SAME SEED AND FERTILIZER MIX AS USED IN HYDROSEEDING AND SPREAD EVENLY OVER THE SITE.

ALL DISTURBED AREAS NOT GRADED AND COMPACTED PRIOR TO OCTOBER 1, SHALL BE SEEDED WITH 200 LBS PER ACRE OF HIGHWAY MIX AND SPREAD WITH A HAY MULCH LAYER 1 1/2" TO 2" THICK.

EROSION CONTROL PROTECTION SHALL BE CONSIDERED COMPLETE AND SUCCESSFUL WHEN A GRASS MAT HAS BEEN ESTABLISHED.

ADDITIONAL TEMPORARY EROSION CONTROL (DURING CONSTRUCTION)

HAY BALES WILL BE PLACED AT THE TOP OF ALL MAJOR FILL SLOPES WHEN NECESSARY, TO PREVENT SILT FROM WASHING INTO EXISTING DRAINAGE WAYS. (SILTATION BARRIER).

TEMPORARY DITCHES WILL BE CONSTRUCTED AS NECESSARY TO ASSURE DRAINAGE IS CHANNELED TO THE FACILITIES BEING PROVIDED.

IF CONSTRUCTION TAKES PLACE DURING RAINY SEASON, HAY BALES AND "MIRAFI" 140 S FABRIC WILL BE REQUIRED AT ALL STORM DRAINAGE INLETS UNTIL ROCKING OF STRETCH IS COMPLETED AND DISTURBED SLOPES STABILIZED BY HYDROSEEDING.

SEDIMENT FENCES

THE FILTER FABRIC SHALL BE PURCHASED IN A CONTINUOUS ROLL CUT TO THE LENGTH OF THE BARRIER TO AVOID USE OF JOINTS. WHEN JOINTS ARE NECESSARY, FILTER CLOTH SHALL BE SPLICED TOGETHER ONLY AT A SUPPORT POST, WITH A MINIMUM 6-INCH OVERLAP, AND BOTH ENDS SECURELY FASTENED TO THE POST.

THE FILTER FABRIC FENCE SHALL BE INSTALLED TO FOLLOW THE CONTOURS WHERE FEASIBLE. THE FENCE POSTS SHALL BE SPACED A MAXIMUM OF 6 FEET APART AND DRIVEN SECURELY INTO THE GROUND A MINIMUM OF 30 INCHES.

A TRENCH SHALL BE EXCAVATED, ROUGHLY 8 INCHES WIDE BY 12 INCHES DEEP, UPSLOPE AND ADJACENT TO THE WOOD POST TO ALLOW THE FILTER FABRIC TO BE BURIED.

WHEN STANDARD STRENGTH FILTER FABRIC IS USED, A WIRE SUPPORT FENCE SHALL BE FASTENED SECURELY TO THE UPSLOPE SIDE OF THE POSTS USING HEAVY-DUTY WIRE STAPLES AT LEAST 1 INCH LONG, TIE WIRE OR HOG RINGS. THE WIRE SHALL EXTEND INTO THE TRENCH A MINIMUM OF 4 INCHES AND SHALL NOT EXTEND MORE THAN 36 INCHES ABOVE THE ORIGINAL GROUND SURFACE.

THE STANDARD STRENGTH FILTER FABRIC SHALL BE STAPLED OR WIRED TO THE FENCE, AND 20 INCHES OF THE FABRIC SHALL BE EXTENDED INTO THE TRENCH. THE FABRIC SHALL NOT EXTEND MORE THAN 30 INCHES ABOVE THE ORIGINAL GROUND SURFACE. FILTER FABRIC SHALL NOT BE STAPLED TO EXISTING TREES.

WHEN EXTRA-STRENGTH FILTER FABRIC AND CLOSER POST SPACING ARE USED, THE WIRE MESH SUPPORT FENCE MAY BE ELIMINATED. IN SUCH A CASE, THE FILTER FABRIC IS STALED OR WIRED DIRECTLY TO THE POSTS WITH ALL OTHER PROVISIONS OF THE ABOVE STANDARD NOTE FOR STANDARD STRENGTH FILTER FABRIC APPLYING.

SEDIMENT FENCES SHALL BE REMOVED WHEN THEY HAVE SERVED THEIR USEFUL PURPOSE, BUT NOT BEFORE THE UPSLOPE AREA HAS BEEN PERMANENTLY STABILIZED.

SEDIMENT FENCES SHALL BE INSPECTED BY APPLICANT/CONTRACTOR IMMEDIATELY AFTER EACH RAINFALL AND AT LEAST DAILY DURING PROLONGED RAINFALL. ANY REQUIRED REPAIRS SHALL BE MADE IMMEDIATELY.

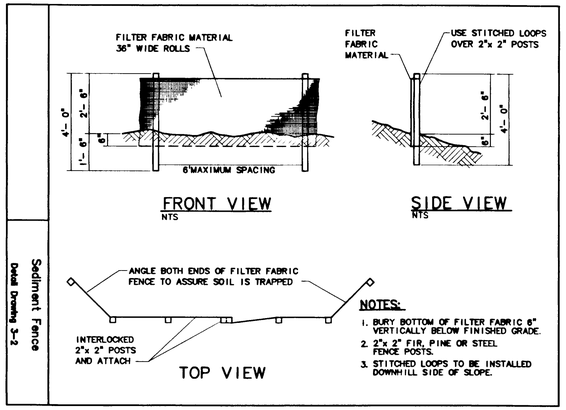

Sediment Fence
Detail Drawing 3-2

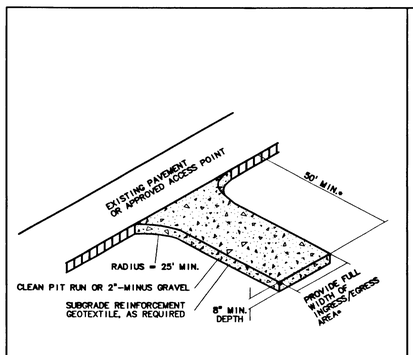

Gravel Construction Entrance
Detail Drawing 3-1A

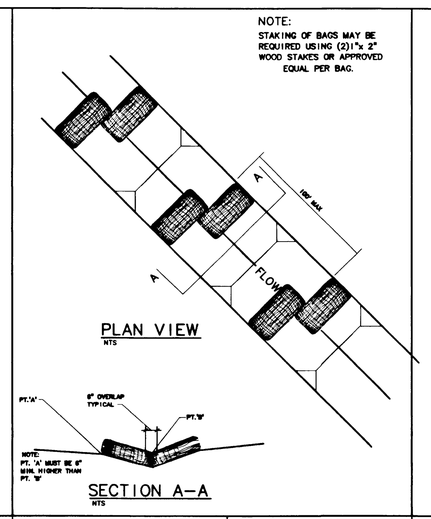

Bioffiter Bag
Ditches and Swales

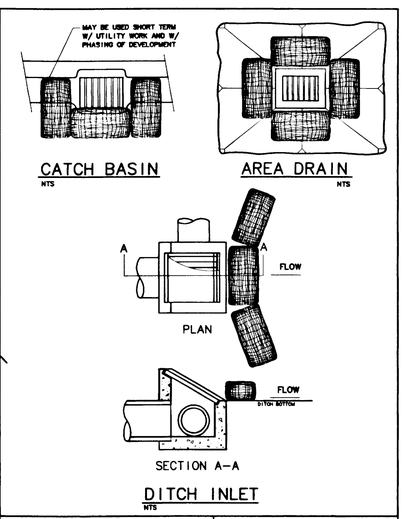

Bioffiter Bags
Temporary
Detail Drawing 3-7D

EROSION CONTROL MATRIX

SITE SITUATION \ EROSION MEASURES	1 GRAVEL CONSTRUCTION ENTRANCE	2 SEDIMENT FENCE/BARRIER AT TOE OF DISTURBED AREA OR STOCKPILE	3 SIDEWALK SUBGRADE GRAVEL BARRIER (SITE SLOPES TO STREET AT <3% GRADE) ALTERNATE TO #2	4 UNDISTURBED BUFFER AT TOE OF DISTURBED ARRAS (ALTERNATE TO #2) (SITE SLOPES <10%)	5 SEDIMENT FENCE OR BARRIER INSTALLED ON CONTOURS (SPACING)	6 TEMP. INTERCEPTOR DIKES/SWALES AROUND ACTIVE WORK AREAS	7 CHECK DAMS	8 STORM DRAIN INLET PROTECTION BARRIER	9 6-MIL PLASTIC SHEET COVER	10 2"- MIN. STRAW MULCH COVER	11 ESTABLISH GRASS	12 EROSION BLANKETS WITH ANCHORS	13 SEDIMENT TRAP OR POND	14 RE-ESTABLISH VEGETATION OR LANDSCAPE PRIOR TO REMOVAL OF EROSION CONTROL MEASURES
SINGLE FAMILY/ DUPLEX RESIDENTIAL														
SLOPE <2%	X		A(2)											X
SLOPE >2%	X	X		A(2)										X
STOCK PILES		X		X					•	O				
COMERCIAL, SUBDIVISION LARGE SITE CONSTRUCTION														
SITE SLOPE <2%	X	X				#								X
SITE SLOPE <10%	X	X		A(2)	X300'	#			O	O	•	O	O	X
SITE SLOPE <15%	X	X			X150'	#			O	O	•	O	O	X
SITE SLOPE <20%	X	X			X100'	#			O	O	•	O	O	X
SITE SLOPE <30%	X	X			X 50'	#			O	O	•	O	O	X
SITE SLOPE <50%	X	X			X 25'	#			•	O	•	O		X
STOCK PILE SLOPE >50%	X	X			X 25'	#			•	O		O		
UTILITIES CONSTRUCTION														
CATCH BASIN DRAINAGE								X						X
DITCH DRAINAGE							X							X
STOCK PILES														
STOCK PILES									•	O				
DITCHES/SWALES														
(CONSTRUCTION/PROTECTION)		X					X			•	O	O		X

KEY: X = BASE MEASURE A = ALTERNATE TO BASE MEASURE INDICATED IN PARENTHESIS # = OPTIONAL BASE MEASURE CAN USE AS APPLICABLE

• = SUPPLEMENTAL WET WEATHER MEASURE (NOVEMBER 1-APRIL 30) (SEEDING PRIOR TO SEPTEMBER 1) O = ALTERNATE WET WEATHER MEASURE TO •

3/31/00
Date
M.F.K.
Designed
R.K.
Drawn
MFK 6/7/00
Checked By Date

REGISTERED PROFESSIONAL ENGINEER 37447 OREGON SEPTEMBER 28, 1982 N. FARES KEKHIA
EXPIRES JUNE 30, 2001

KOSS REAL ESTATE
1098 S. ROSEMONT
WEST LINN, OR 97068
Phone: (503) 557-1144
Fax: (503) 557-1294

ROSEMONT SUMMIT II SUBDIVISION
PHASE A
CITY OF WEST LINN, OREGON

EROSION CONTROL NOTES AND DETAILS

otak Incorporated
17355 SW Boones Ferry Rd.
Lake Oswego, Oregon 97035
Phone: (503) 635-3618
FAX: (503) 635-5395

L9754
Project No.
D754AB05
File No.
5
Sheet No.

Copyright 1999 ©

AS-BUILT SET 6/07/00

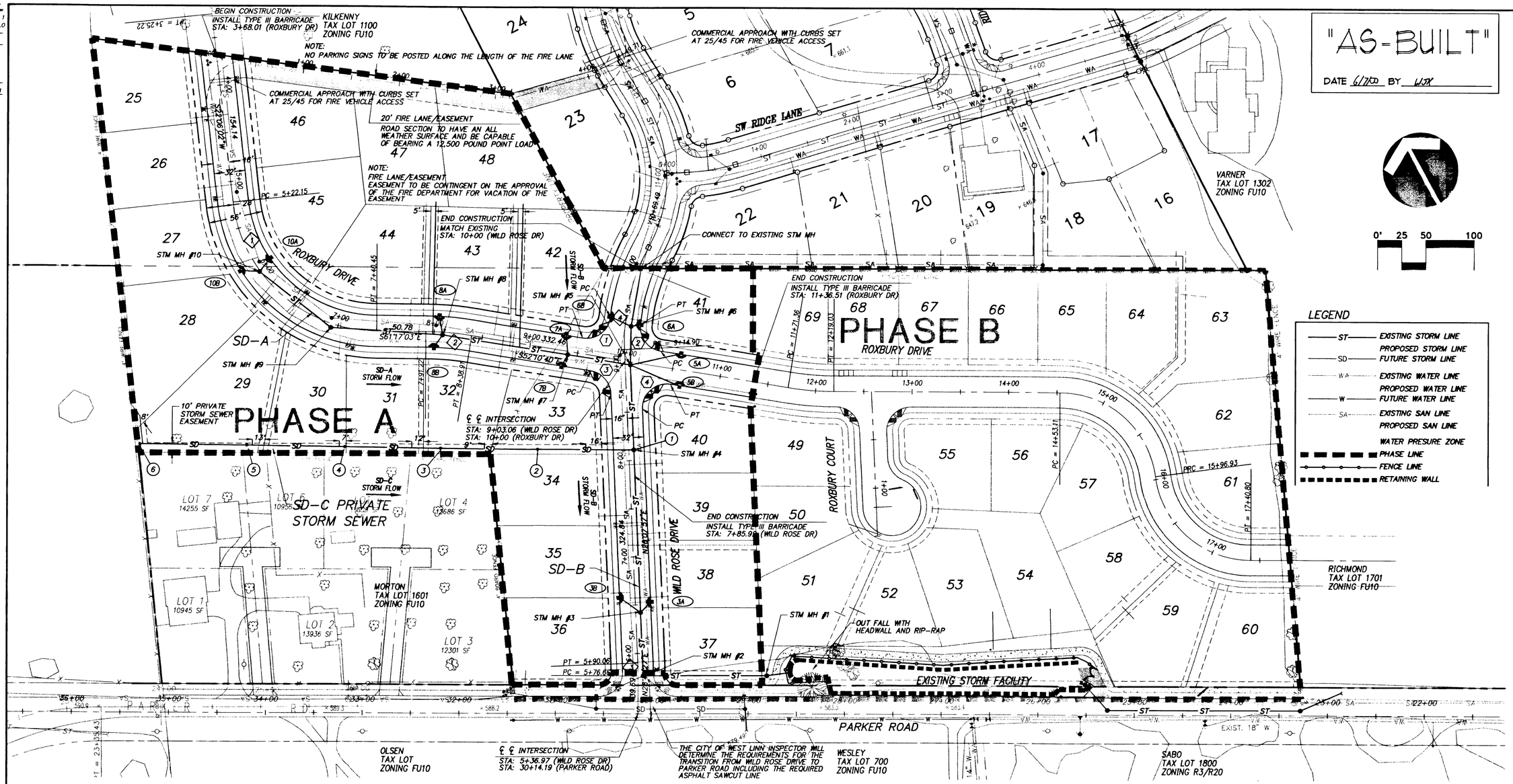

CURB INFORMATION (T.O.C ELEVATION)

(1) PC AT STA: 9+46.47 16.00' L (WILD ROSE DR)
R = 25.00' PC: 636.55
L = 40.42' 1/4: 635.00
Δ = 92°38'41" 1/2: 632.83
3/4: 630.95
PT: 630.25
PT AT STA: 9+52.71 16.00' L (WESTRIDGE DR)

(2) PC AT STA: 10+34.84 16.00' L (ROXBURY DR)
R = 25.00' PC: 630.47
L = 37.52' 1/4: 631.09
Δ = 85°59'23" 1/2: 632.70
3/4: 634.58
PT: 635.97
PT AT STA: 9+41.70 16.00' R (WILD ROSE DR)

(3) PC AT STA: 9+66.61 16.00' R (ROXBURY DR)
R = 25.00' PC: 630.45
L = 34.17' 1/4: 630.05
Δ = 78°18'37" 1/2: 628.88
3/4: 627.67
PT: 626.47
PT AT STA: 8+69.67 16.00' L (WILD ROSE DR)

(4) PC AT STA: 8+52.70 16.00' R (WILD ROSE DR)
R = 25.00' PC: 624.04
L = 44.37' 1/4: 625.65
Δ = 101°41'2" 1/2: 627.26
3/4: 628.87
PT: 629.85
PT AT STA: 10+50.35 16.00' R (ROXBURY DR)

CATCH BASIN INFORMATION

(3A) STA: 6+52.35 16.00' R (WILD ROSE DR)
TOC: 593.95 USE (4-32-2)
IE OUT: 588.45
15.18 LF 10" STM
S= -0.0130

(3B) STA: 6+58.30 16.00' L (WILD ROSE DR)
TOC: 594.67 USE (4-32-2)
IE OUT: 591.37
26.77 LF 10" STM
S= 0.1222

(5A) STA: 10+53.57 16.00' L (ROXBURY DR)
TOC: 630.13
IE OUT: 625.73
51.18 LF 10" STM
S= 0.0777

(5B) STA: 10+53.57 16.00' R (ROXBURY DR)
TOC: 629.83
IE OUT: 626.13
49.25 LF 10" STM
S= 0.0889

(6A) STA: 9+41.70 16.00' R (WILD ROSE DR)
TOC: 635.61 USE (4-32-2)
IE OUT: 629.11
9.95 LF 10" STM
S= 0.0965

(6B) STA: 9+46.47 16.00' L (WILD ROSE DR)
TOC: 636.30 USE (4-32-2)
IE OUT: 631.85
23.47 LF 10" STM
S= 0.1576

(7A) STA: 9+35.74 16.00' L (ROXBURY DR)
TOC: 629.95
IE OUT: 625.25
19.97 LF 10" STM
S= 0.0876

(7B) STA: 9+35.74 16.00' R (ROXBURY DR)
TOC: 629.85
IE OUT: 625.10
13.27 LF 10" STM
S= 0.1206

(8A) STA: 8+04.64 16.00' L (ROXBURY DR)
TOC: 634.75
IE OUT: 630.30
19.31 LF 10" STM
S= 0.0605

(8B) STA: 8+00.02 16.00' R (ROXBURY DR)
TOC: 635.06
IE OUT: 629.81
15.63 LF 10" STM
S= 0.0435

(10A) STA: 5+94.79 16.00' L (ROXBURY DR)
TOC: 648.82
IE OUT: 644.52
17.55 LF 10" STM
S= 0.0279

(10B) STA: 5+89.09 16.00' R (ROXBURY DR)
TOC: 649.37
IE OUT: 645.22
19.03 LF 10" STM
S= 0.0625

◇ CENTERLINE CURVE DATA

CURVE	RADIUS	LENGTH	TANGENT	DELTA
1	150.00	218.30	133.61	83°23'05"
2	300.00	47.68	23.89	9°06'23"
3	300.00	13.40	6.70	2°33'30"
4	200.00	85.10	43.20	24°22'47"

STORM SEWER MANHOLE TABLE

MH #	Storm Sewer Station	Rim elevation	Invert out	Slope out	Storm Sewer Alignment
1	10+08.73	585.92	576.12	0.0046	SD-B
2	11+36.84	585.86	579.71	0.0265	SD-B
3	12+01.90	592.55	587.45	0.1151	SD-B
4	13+70.89	617.66	609.96	0.1243	SD-B
5	14+58.96	630.55	621.55	0.1293	SD-B
6	14+98.68	635.35	627.95	0.1561	SD-B
Existing	15+59.14	642.78	637.77	0.1593	SD-B
7	0+65.93	630.05	623.30	0.0235	SD-A
8	1+96.99	634.63	628.93	0.0414	SD-A
9	3+12.87	641.43	636.63	0.0647	SD-A
10	4+06.33	648.43	643.83	0.0749	SD-A

STORM SEWER LATERAL TABLE

Storm Sewer SD-A

Lot No.	Sewer Station	Length (l.f.)	Invert @ main	Slope	Invert @ end of lateral
47	2+07.11	137	628.54	0.1004	642.30
48	1+16.42	148	625.78	0.1060	641.47

PRIVATE STORM SEWER LATERAL TABLE

Storm Sewer SD-C

Lot No.	Sewer Station	Length (l.f.)	Invert @ main	Slope	Invert @ end of lateral
28	5+07.60	30	618.39	0.0200	619.99
29	3+95.00	6	617.83	1.0166	623.93
30	3+05.00	6	617.38	0.7000	621.58
31	2+30.00	6	616.65	0.6750	620.70
32	1+55.00	6	615.90	0.6683	619.91
33	0+50.00	6	613.05	0.5933	616.61

PRIVATE STORM SEWER CONSTRUCTION NOTES

(1) STMH #4
SD-C STA 0+00.00 =
SD-B STA 13+70.89
IE IN 8" = 610.76
100.00 LF 8" STM PIPE, S= 0.0459

(2) SD-C STA 1+00.00
CLEANOUT
RIM = 621.50, IE = 615.35
100.00 LF 8" STM PIPE, S= 0.0100

(3) SD-C STA 2+00.00
CLEANOUT
RIM = 624.25, IE = 616.35
100.00 LF 8" STM PIPE, S= 0.0100

(4) SD-C STA 3+00.00
CLEANOUT
RIM = 626.15, IE = 617.35
100.00 LF 8" STM PIPE, S= 0.0050

(5) SD-C STA 4+00.00
CLEANOUT
RIM = 625.61, IE = 617.85
109.61 LF 8" STM PIPE, S= 0.0050

(6) SD-C STA 5+09.61
CLEANOUT
RIM = 622.66, IE = 618.40

3/31/00
Date
M.F.K.
Designed
R.K.
Drawn
MFK 6/7/00
Checked By Date

REGISTERED PROFESSIONAL ENGINEER
37447
OREGON
SEPTEMBER 28, 1984
M. FARES KERHIA
EXPIRES JUNE 30, 2001

KOSS REAL ESTATE
1098 S. ROSEMONT
WEST LINN, OR 97068
Phone: (503) 557-1144
Fax: (503) 557-1294

ROSEMONT SUMMIT II SUBDIVISION
PHASE A
CITY OF WEST LINN, OREGON

STREET AND STORM DRAIN PLAN

otak Incorporated
17355 SW Boones Ferry Rd.
Lake Oswego, Oregon 97035
Phone: (503) 635-3618
FAX: (503) 635-5395

L9754
Project No.
D754AB06
File No.
6
Sheet No.

Copyright 1999 ©

AS-BUILT SET 6/07/00

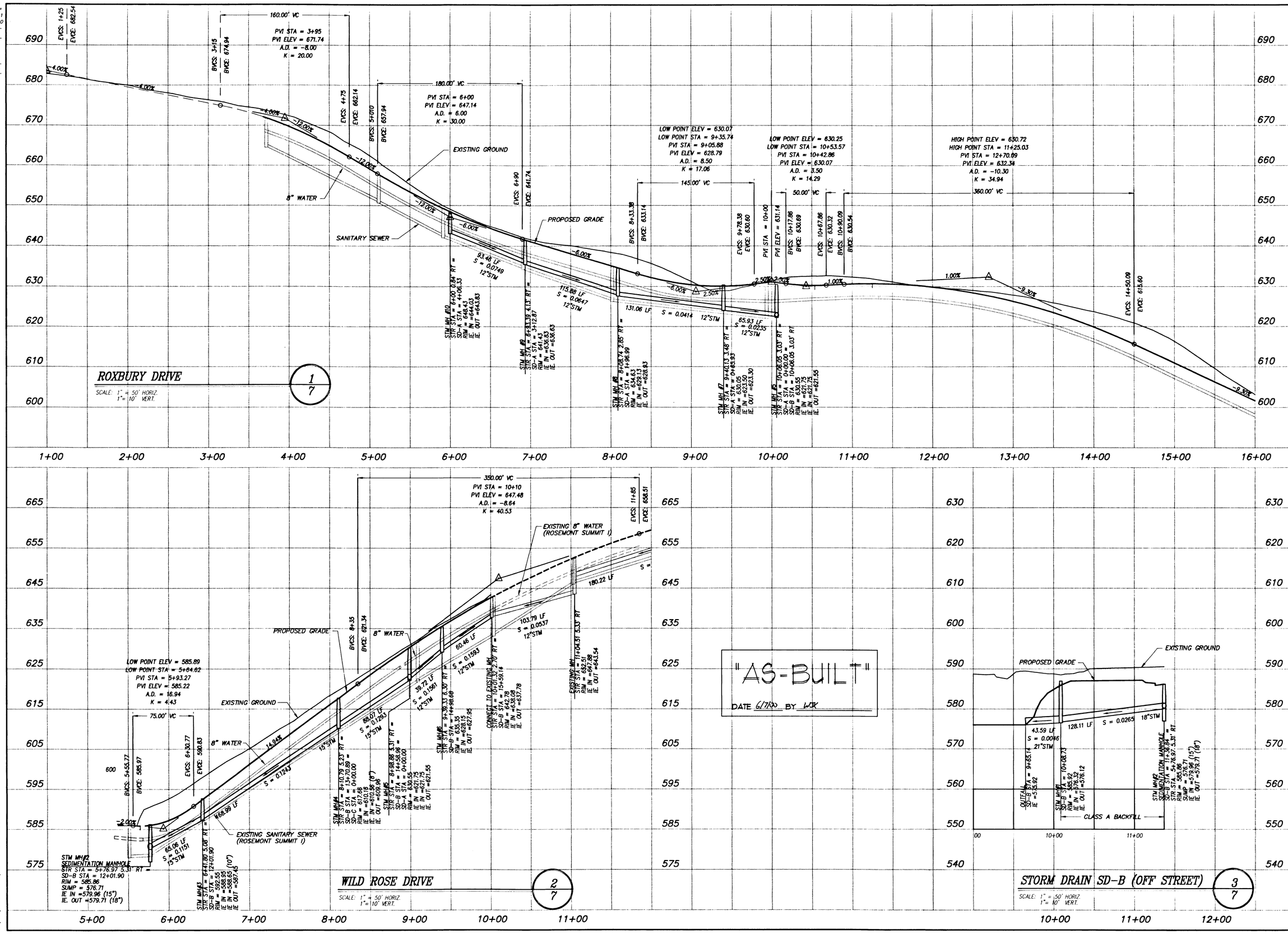

3/31/00
Date
M.F.K.
Designed
R.K.
Drawn
FK 6/7/00
Checked By Date

REGISTERED PROFESSIONAL ENGINEER 17447 OREGON SEPTEMBER 28, 1984 N. FARES KERHIA
EXPIRES JUNE 30, 2001

KOSS REAL ESTATE
1098 S. ROSEMONT
WEST LINN, OR 97068
Phone: (503) 557-1144
Fax: (503) 557-1294

ROSEMONT SUMMIT II SUBDIVISION
PHASE A
CITY OF WEST LINN, OREGON
STREET AND STORM DRAIN PROFILES

otak Incorporated
17355 SW Boones Perry Rd.
Lake Oswego, Oregon 97035
Phone: (503) 635-3618
FAX: (503) 635-5395

L9754
Project No.
D754AB07
File No.
7
Sheet No.

Copyright 1999 ©

AS-BUILT SET 6/07/00

08/30/1999 7:10pm--> D754SC07.DWG

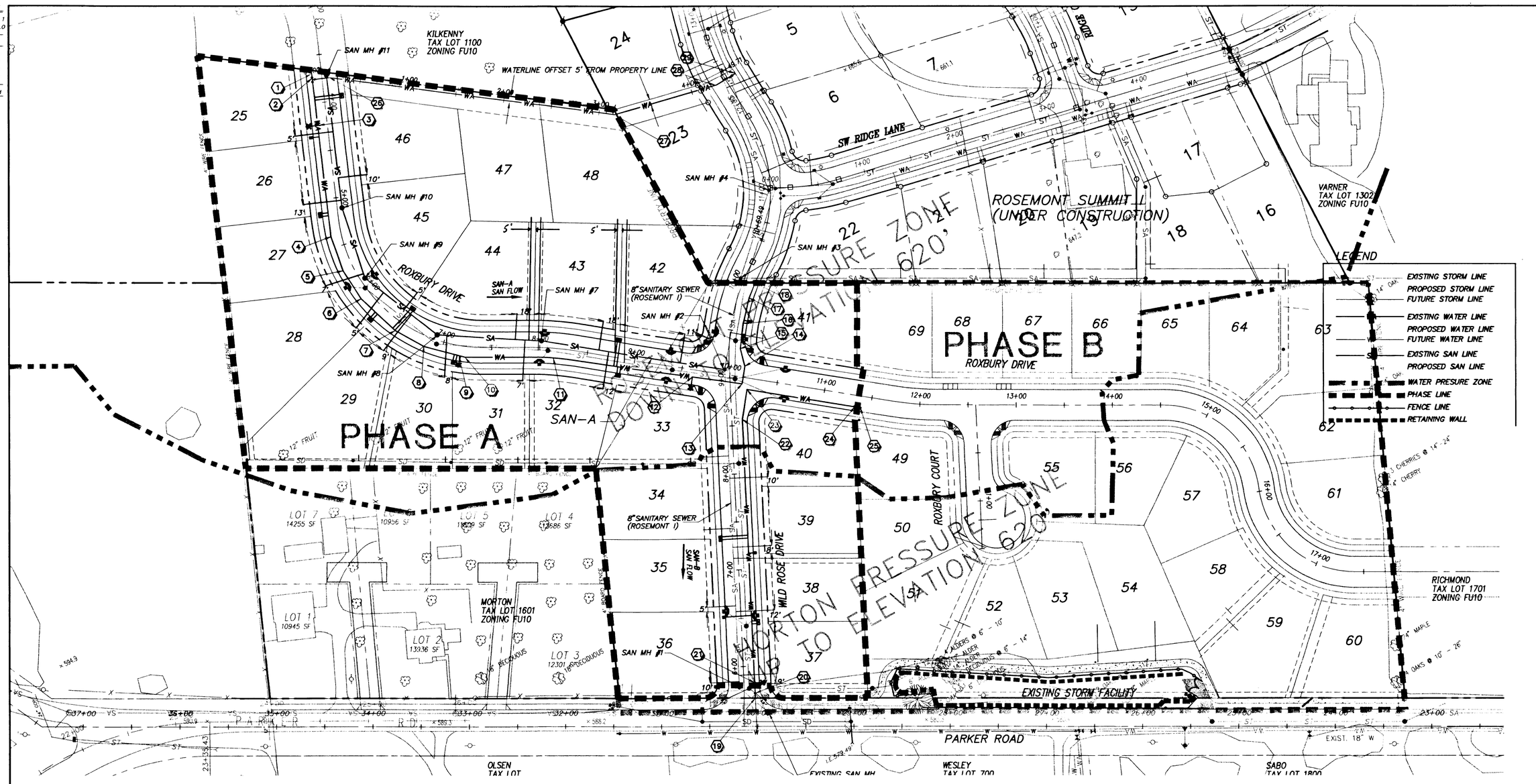

WATER LINE CONSTRUCTION NOTES

WATER LINE STATION REFER TO ℄ OF THE STREET

1. STA: 3+68.62 10.00' R (ROXBURY DR) INSTALL BLOWOFF
2. STA: 3+73.63 10.00' R (ROXBURY DR) INSTALL 8"x8"x8" TEE WITH 3-8" GATE
3. STA: 4+23.05 10.00' R (ROXBURY DR) INSTALL FIRE HYDRANT
4. STA: 5+38.88 11.00' R (ROXBURY DR) INSTALL 11.25° BEND DEFLECT TO 12°57'14"
5. STA: 5+73.87 11.08' R (ROXBURY DR) INSTALL 11.25° BEND DEFLECT TO 13°25'51"
6. STA: 6+06.07 10.79' R (ROXBURY DR) INSTALL 11.25° BEND DEFLECT TO 14°15'0"
7. STA: 6+50.99 10.79' R (ROXBURY DR) INSTALL 11.25° BEND DEFLECT TO 14°15'0"
8. STA: 6+82.56 11.00' R (ROXBURY DR) INSTALL 11.25° BEND DEFLECT TO 14°15'0"
9. STA: 7+17.88 11.00' R (ROXBURY DR) INSTALL FIRE HYDRANT
10. STA: 7+23.72 11.00' R (ROXBURY DR) INSTALL 11.25° BEND DEFLECT TO 14°15'0"
11. STA: 8+15.07 10.00' R (ROXBURY DR) PC = 7+91.22, PT = 8+38.91 RADIUS = 290.00'
12. STA: 9+61.99 7.88' R (ROXBURY DR) INSTALL FIRE HYDRANT
13. STA: 10+14.09 7.00' R (ROXBURY DR) INSTALL 8"x8" 90° BEND
14. STA: 9+11.75 16.19' R (WILD ROSE DR) INSTALL 22.50° BEND DEFLECT TO 21°27'09"
15. STA: 9+31.09 11.65' R (WILD ROSE DR) INSTALL 22.50° BEND DEFLECT TO 21°27'09"
16. STA: 9+58.86 12.00' R (WILD ROSE DR) INSTALL 11.25° BEND DEFLECT TO 6°36'03"
17. STA: 9+87.71 11.65' R (WILD ROSE DR) INSTALL 11.25° BEND DEFLECT TO 8°16'51"
18. STA: 10+05.09 11.92' R(WILD ROSE DR) REMOVE BLOWOFF CONNECT TO EXISTING WATER LINE
19. STA: 5+68.03 11.00' R (WILD ROSE DR) INSTALL BLOWOFF
20. STA: 5+72.02 11.00' R (WILD ROSE DR) INSTALL 8" GATE VALVE
21. STA: 5+83.99 11.00' R (WILD ROSE DR) INSTALL FIRE HYDRANT
22. STA: 8+57.94 11.00' R (WILD ROSE DR) INSTALL 11.25° BEND DEFLECT TO 11°41'23"
23. STA: 10+20.23 12.00' R (ROXBURY DR) INSTALL 8"X8" 90° BEND
24. STA: 11+33.33 12.00' R (ROXBURY DR) INSTALL 8" GATE VALVE
25. STA: 11+40.12 12.00' R (ROXBURY DR) INSTALL BLOWOFF
26. STA: 0+18.16 (FIRE ACCESS LANE) INSTALL 11.25° BEND DEFLECT TO 13°54'10"
27. STA: 3+16.25 (FIRE ACCESS LANE) INSTALL 22.5° BEND DEFLECT TO 23°15'23"
28. STA: 4+26.61 (FIRE ACCESS LANE) INSTALL 11.25° BEND DEFLECT TO 15°59'26"
29. STA: 4+49.71 (FIRE ACCESS LANE) CONNECT TO EXISTING 8" WATERLINE INSTALL 8" GATE VALVE, INSTALL 8" HOT TAP WITH STAINLESS STEEL TAPPING SLEEVE "JCM OR MUELLER"

SANITARY SEWER MANHOLE TABLE

MH #	Sanitary Sewer Station	Rim elevation	Invert out	Slope out	Sanitary Sewer Alignment
1	1+40.53	586.10	578.40	0.0094	SAN-B
2	4+71.83	631.40	621.20	0.1286	SAN-B
3	5+68.15	643.23	632.43	0.1130	SAN-B
4	6+56.90	652.46	646.00	0.1368	SAN-B
7	6+46.76	634.94	625.84	0.0222	SAN-A
8	7+73.12	641.69	633.54	0.0692	SAN-A
9	8+67.93	649.23	640.93	0.0758	SAN-A
10	9+44.68	657.50	648.40	0.0947	SAN-A
11	10+84.16	671.65	663.25	0.1050	SAN-A

SANITARY SEWER LATERAL TABLE

Sanitary Sewer Line SAN-A

Lot No.	Sewer Station	Length (l.f.)	Invert @ main	Slope	Invert @ end of lateral
25	10+24.94	40	658.83	0.0715	661.69
26	9+52.68	40	651.64	0.0568	653.91
27	8+72.75	42	642.79	0.0621	645.40
28	8+43.71	46	640.12	0.0220	641.13
29	8+05.18	47	637.04	0.0162	637.80
30	7+60.11	44	633.34	0.0302	634.67
31	6+80.06	43	627.57	0.0544	629.91
32	5+93.92	40	624.70	0.0518	626.77
42	5+18.38	30	623.03	0.1147	626.47
43	6+04.28	30	624.93	0.0830	627.42
44	6+92.03	27	628.43	0.0981	631.08
45	8+16.04	22	637.91	0.0805	639.68
46	9+76.98	30	654.06	0.0812	656.51
47	6+82.74	127	627.57	0.1060	641.03
48	6+05.84	137	624.96	0.1217	641.63

"AS-BUILT"

DATE 6/7/00 BY WJK

3/31/00
Date
M.F.K.
Designed
R.K.
Drawn
MFK 6/7/00
Checked By Date

REGISTERED PROFESSIONAL ENGINEER 17447 OREGON SEPTEMBER 28, 1984 M. FARES KERHIA
EXPIRES JUNE 30, 2001

KOSS REAL ESTATE
1098 S. ROSEMONT
WEST LINN, OR 97068
Phone: (503) 557-1144
Fax: (503) 557-1294

ROSEMONT SUMMIT II SUBDIVISION
PHASE A
CITY OF WEST LINN, OREGON

SANITARY SEWER AND WATER PLAN

otak Incorporated
17355 SW Boones Ferry Rd.
Lake Oswego, Oregon 97035
Phone: (503) 635-3618
FAX: (503) 635-5395

L9754
Project No.
D754SC08
File No.
8
Sheet No.

Copyright 1999 ©

AS-BUILT SET 6/07/00

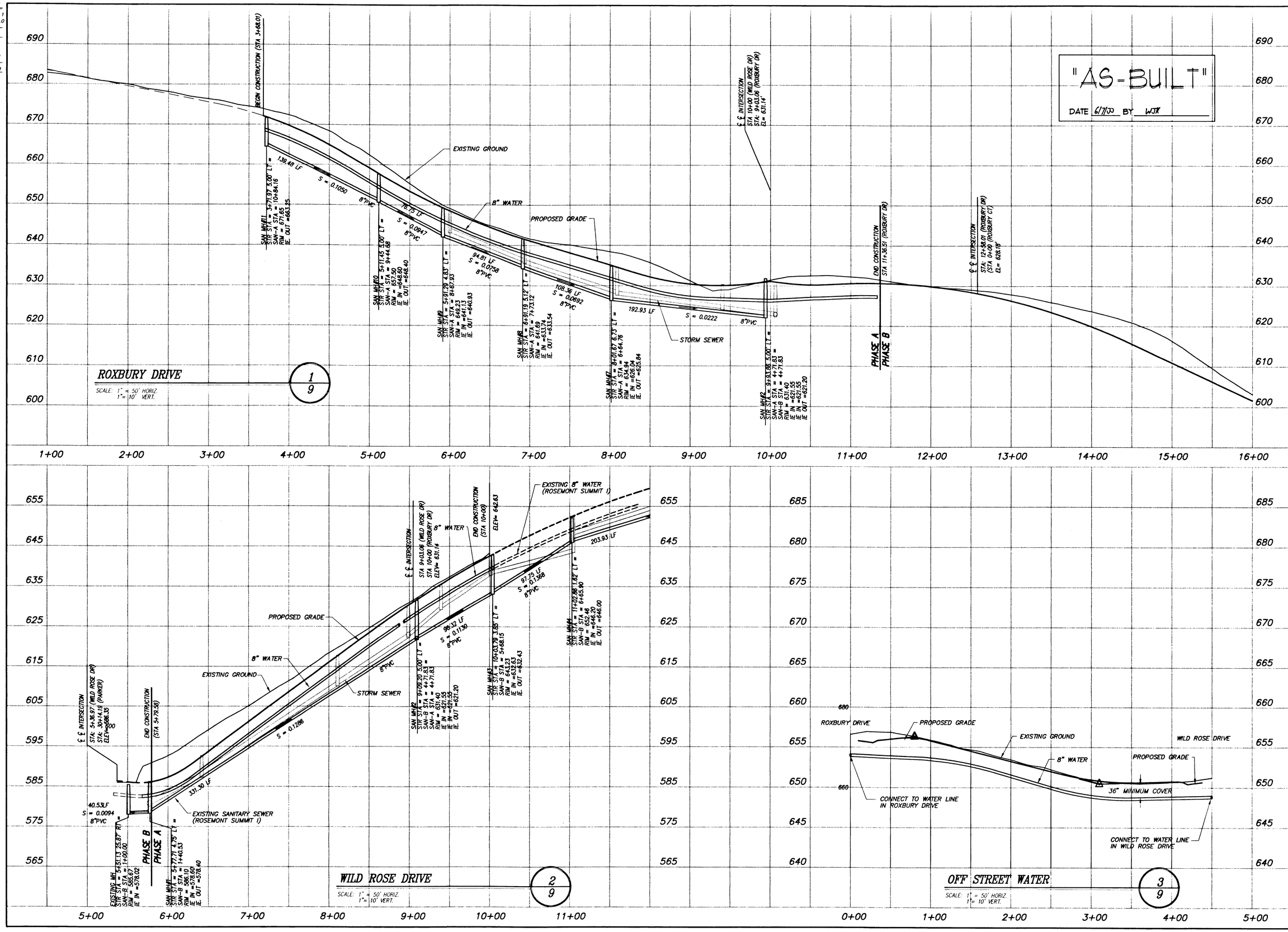

3/31/00
Date
M.F.K.
Designed
R.K.
Drawn
6/7/00
Checked By Date

REGISTERED PROFESSIONAL ENGINEER 17447 OREGON SEPTEMBER 28, 1984 M. FARES KEKHIA
EXPIRES JUNE 30, 2001

KOSS REAL ESTATE
1098 S. ROSEMONT
WEST LINN, OR 97068
Phone: (503) 557-1144
Fax: (503) 557-1294

ROSEMONT SUMMIT II SUBDIVISION
PHASE A
CITY OF WEST LINN, OREGON
SANITARY SEWER AND WATER PROFILES

otak Incorporated
17355 SW Boones Ferry Rd.
Lake Oswego, Oregon 97035
Phone: (503) 635-3618
FAX: (503) 635-5395

L9754
Project No.
D754AB09
File No.
9
Sheet No.
Copyright 1999 ©

AS-BUILT SET 6/07/00

10/22/1999 3:59pm --> D754SC09.DWG

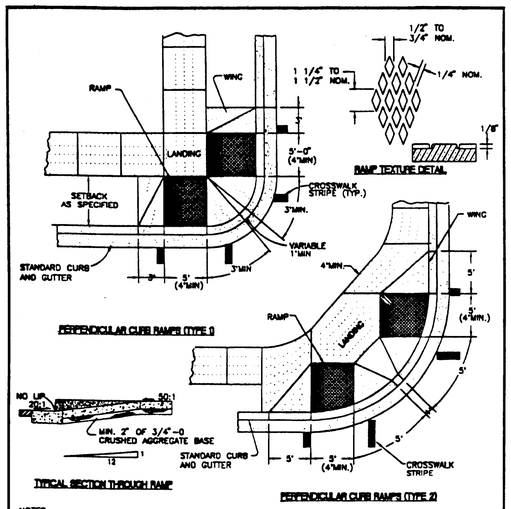

NOTES:

1. THE "AMERICANS WITH DISABILITIES ACT" (ADA) REQUIRES THAT ACCESS RAMPS TO SIDEWALKS CONFORM TO ALL FEDERAL GUIDELINES. EXCEPTIONS TO THE REQUIREMENTS IN THIS DRAWING MUST BE APPROVED BY THE ENGINEER AND MUST COMPLY WITH ADA.
2. NO ABOVE GROUND UTILITIES ARE PERMITTED WITHIN RAMP AREA.
3. LANDINGS SHALL BE PLACED AT THE TOP OF EACH RAMP. LANDING SLOPES SHALL NOT EXCEED 50:1 IN ANY DIRECTION. THE SLOPE OF THE SURFACING AT THE BOTTOM OF THE RAMP SHALL NOT EXCEED 20:1 FOR A DISTANCE OF 2' (SEE TYPICAL SECTION ABOVE).
4. MINIMUM LANDING DIMENSIONS SHALL BE 4' X 4'.
5. RAMP SURFACE SHALL BE TEXTURED WITH RAISED DIAMOND TEXTURE. TEXTURING SHALL BE DONE WITH AN EXPANDED METAL GRATE STAMPED INTO THE CONCRETE.
6. CONCRETE STRENGTH SHALL BE 3300 PSI.

APWA OREGON CHAPTER	
SIDEWALK ACCESS RAMPS	
DATE: AUG 1996	DRAWING NO. 208

FILENAME: APWAOD08.DWG

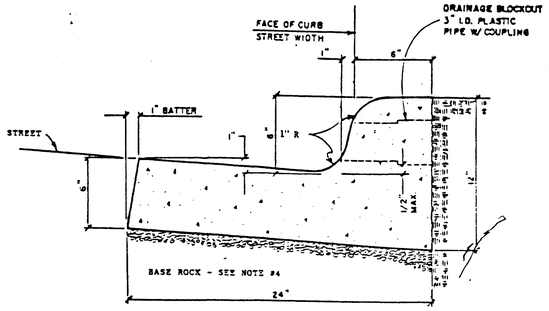

1. When used along medians, gutters may be reduced with prior approval from the City Engineer.
2. Concrete shall have a breaking strength of 3000 PSI after 28 days.
3. CONTRACTION JOINTS
   A. To be provided:
      1) at each point of tangency of the curb.
      2) at each cold joint.
      3) at each side of inlet structures.
      4) at both sides of an approach.
   B. Spacing to be not more than 15 feet.
   C. The depth of the joint shall be at least 1 1/2".
4. Base rock - 1 1/2" minus, 95% compaction. Rock shall be to subgrade of street structure or 4" in depth, whichever is greater.
5. Drainage block - 3" dia. plastic pipe.
   A. Drainage access through existing curbs shall be by the following:
      1) core drilling.
      2) vertical saw-cut of curb 18" each side of drain & repoured to full depth of curb.

CITY OF WEST LINN	CURB & GUTTER
DRAWN BY DDP DATE 5-20-87	
CHECKED BY DLL DATE 5-27-87	
APPROVED BY Earl Reed DATE 5-27-87	DWG. NO. CG - 265

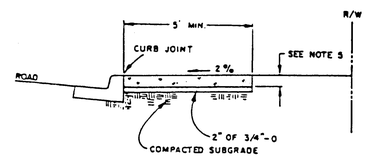

SIDEWALK ADJACENT TO CURB

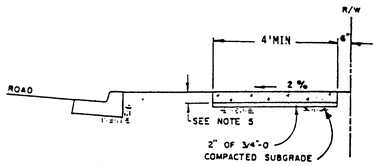

SIDEWALK AWAY FROM CURB

1. Concrete shall be 3000PSI at 28 days. 6 sack mix. slump range of 1 1/2" to 3".
2. Panel lengths shall be equal to the sidewalk width. but may be adjusted with the City Engineers approval.
3. Contraction joints (1 1/2" deep) shall be placed every third panel. with a max. spacing of 15 feet.

   Joints shall also be placed at the sides of driveway approaches, utility vaults. and wheelchair ramps.
4. A curing compound shall be used. White reflective sheeting shall be used in case of rain.
5. For sidewalks adjacent to the curb & poured at the same time as the curb. the joint between then shall be a troweled joint with a min. 1/2" radius.
6. The sidewalk shall have a min. thickness of 6" if mountable curb is used or if the sidewalk is intended as a portion of the driveway. Otherwise. the sidewalk shall have a min. thickness of 4".
7. Drain blockouts in the curb shall be extended to the back of the sidewalk with a 3" dia. plastic pipe at a 2% slope. A contraction joint shall be placed over the pipe.

CITY OF WEST LINN	CONCRETE SIDEWALK
DRAWN BY DDP DATE 5-20-87	
CHECKED BY DLL DATE 5-27-87	
APPROVED BY Earl Reed DATE 5-27-87	DWG. NO. CS - 270

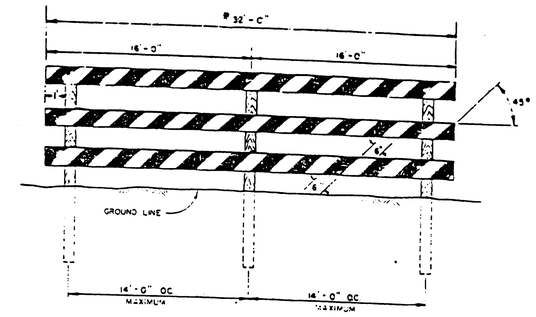

ELEVATION

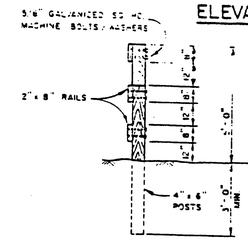

END VIEW

NOTES:

1. RAILS TO BE PAINTED BLACK WITH WHITE STRIPES THE WHITE STRIPES SHALL BE REFLECTORIZED
   * FOR WIDER APPLICATIONS, MULTIPLE SECTIONS AS SHOWN SHALL BE USED.
2. SEE MANUAL ON UNIFORM TRAFFIC CONTROL DEVICES FOR STREETS AND HIGHWAYS AND THE OREGON SUPPLEMENT.
   3F-1 BARRICADES
   6C-8 BARRICADE DESIGN
   6C-9 BARRICADE APPLICATION
3. ALL MATERIALS AND WORKMANSHIP SHALL BE IN ACCORDANCE WITH THE CURRENT STATE OF OREGON STANDARD SPECIFICATIONS FOR HWY. CONSTRUCTION.

CITY OF WEST LINN	STREET BARRICADE -TYPE III
DRAWN BY DDP DATE 5-20-87	
CHECKED BY DLL DATE 5-27-87	
APPROVED BY Earl Reed DATE 5-27-87	DWG. NO. SB - 276

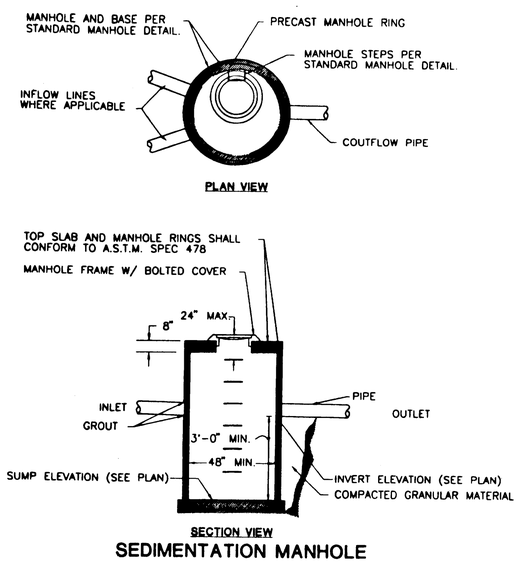

SEDIMENTATION MANHOLE

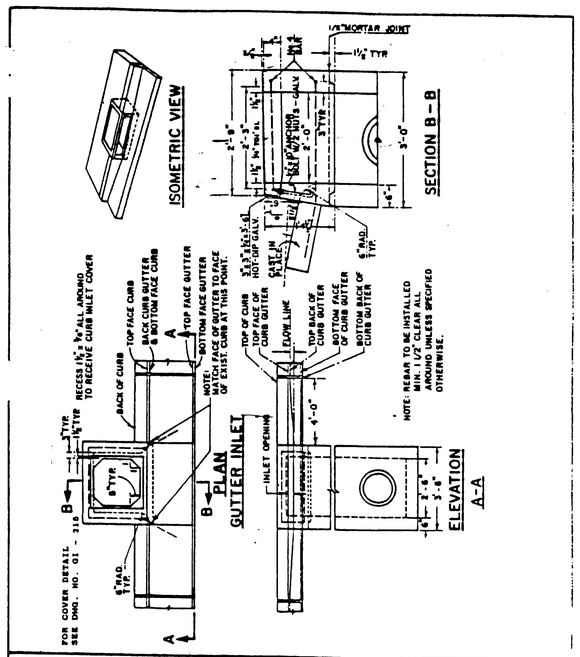

CITY OF WEST LINN	GUTTER INLET-2 1/2 A
DRAWN BY DDP DATE 5-20-87	
CHECKED BY DLL DATE 5-27-87	
APPROVED BY Earl Reed DATE 5-27-87	DWG. NO. GI - 214

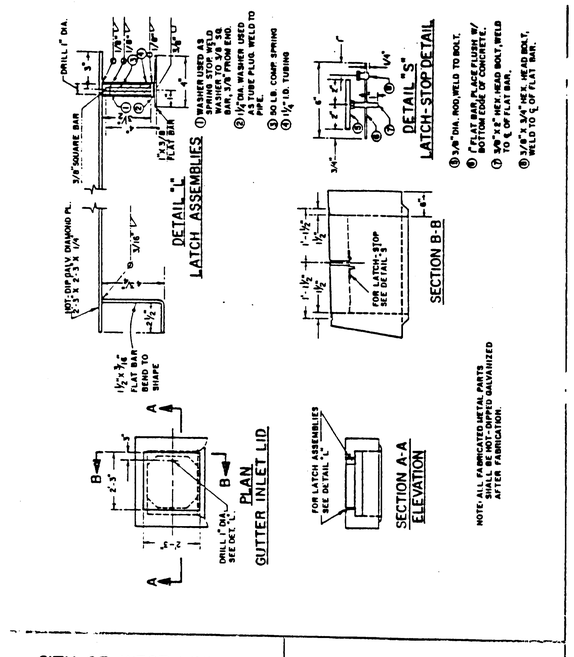

CITY OF WEST LINN	GUTTER INLET COVER
DRAWN BY DDP DATE 5-20-87	
CHECKED BY DLL DATE 5-27-87	
APPROVED BY Earl Reed DATE 5-27-87	DWG. NO. GI - 215

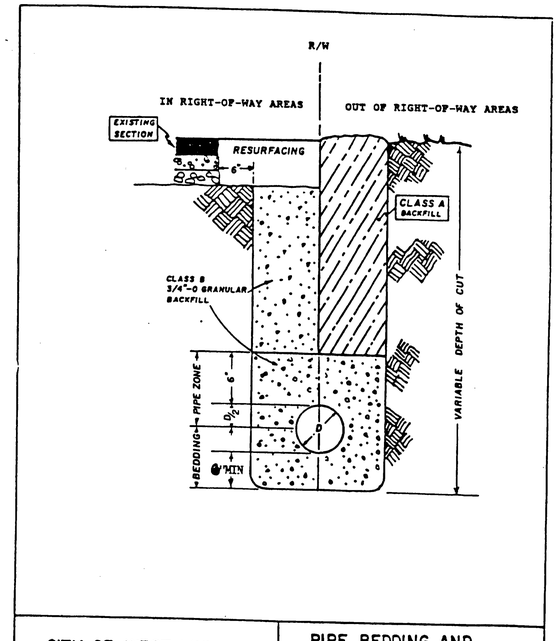

CITY OF WEST LINN	PIPE BEDDING AND BACKFILL DETAILS
DRAWN BY DDP DATE 5-20-87	
CHECKED BY DLL DATE 5-27-87	
APPROVED BY Earl Reed DATE 5-27-87	DWG. NO. PB - 280

CITY OF WEST LINN APPROVED DATE: 11/1/99 BY: DKS

10/01/99

Date

M.F.K.

Designed

R.K.

Drawn

Checked By Date

REGISTERED PROFESSIONAL ENGINEER 17447 OREGON SEPTEMBER 28, 1984 M. FARES KERWIN

EXPIRES JUNE 30, 2001

KOSS REAL ESTATE
1098 S. ROSEMONT
WEST LINN, OR 97068
Phone: (503) 557-1144
Fax: (503) 557-1294

ROSEMONT SUMMIT II SUBDIVISION
PHASE A
CITY OF WEST LINN, OREGON

DETAIL SHEET

otak Incorporated
17355 SW Boones Ferry Rd.
Lake Oswego, Oregon 97035
Phone: (503) 635-3618
FAX: (503) 635-5395

L9754
Project No.

D754sc13
File No.

10
Sheet No.

Copyright 1999 ©

AS-BUILT SET 6/07/00

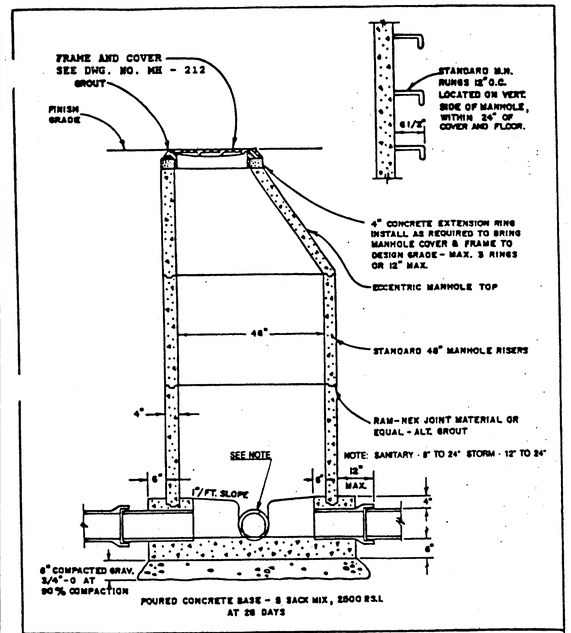

CITY OF WEST LINN	STANDARD MANHOLE
DRAWN BY DDP DATE 5-20-87	
CHECKED BY DLL DATE 5-27-87	DWG. NO. MH - 209
APPROVED BY Earl Reed DATE 5-27-87	

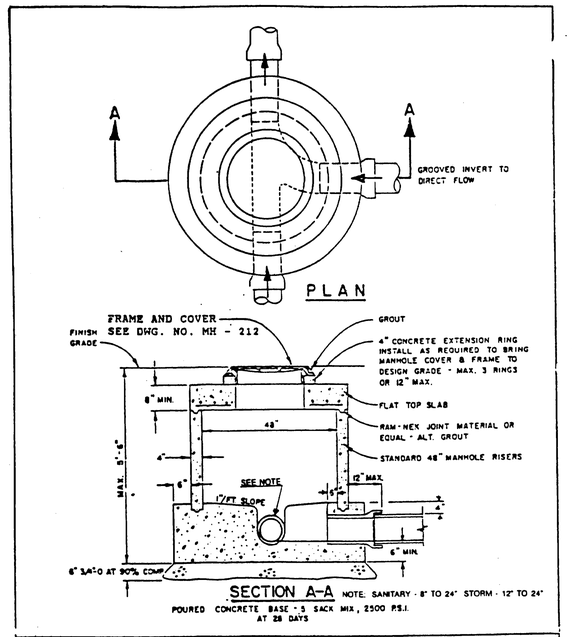

CITY OF WEST LINN	SHALLOW MANHOLE
DRAWN BY DDP DATE 5-20-87	
CHECKED BY DLL DATE 5-27-87	DWG. NO. MH - 210
APPROVED BY Earl Reed DATE 5-27-87	

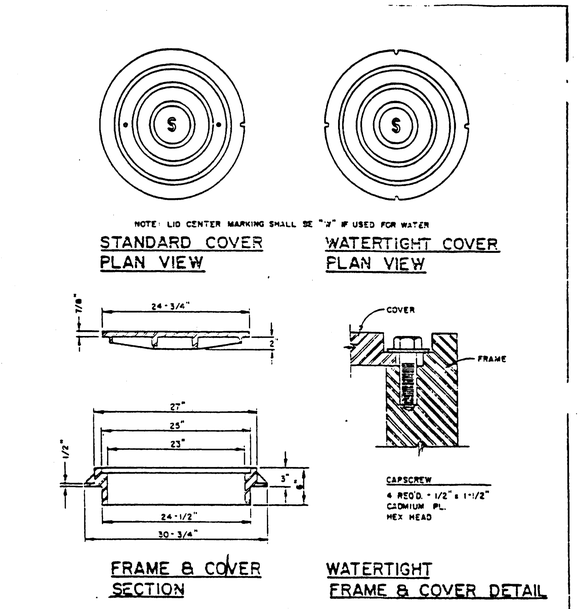

CITY OF WEST LINN	MANHOLE FRAME & COVER
DRAWN BY DDP DATE 5-20-87	
CHECKED BY DLL DATE 5-27-87	DWG. NO. MH - 212
APPROVED BY Earl Reed DATE 5-27-87	

Rubber "Fernco" coupler (or approved equal) between new and exst. SS pipe (each connection).

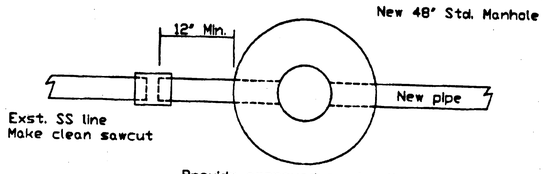

Provide approved sand collar or Kor-N-Seal connection (or approved equal) at manhole for PVC pipe penetration.

New PVC (ASTM 3034, SDR 35) pipe or concrete pipe matching exst. SS line size.

MANHOLE DETAIL - PLAN VIEW
NEW MH TO EXST. SS LINE CONNECTION
(Typical connection. Multiple connections may exist.)
N.T.S.

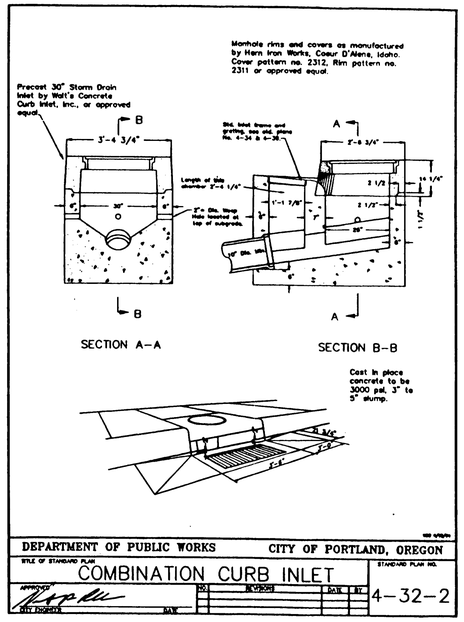

NOTES:

1. HYDRANTS TO BE MUELLER CENTURION MOD. A-423 DRY BARREL 1 1/2" OPER. NUTS. BX CLOW/MEDIDION F-2378.
2. HYDRANT COLOR TO BE MILLER EQUIP. ENAMEL O E 40 (SAFETY YELLOW).
3. ~~JOINTS TO BE RESTRAINED BY 3/4" DIA. GALVANIZED STEEL RODS.~~ Joints to be restrained by Mega Lugs and concrete thrust blocks.
4. ALL FITTINGS IN CONTACT W/CONCRETE SHALL BE WRAPPED IN PLASTIC. HYDRANT DRAIN HOLES TO REMAIN OPEN TO DRAIN ROCK AND OPERATIONAL.
5. MIN. 4 CU. FT. OF 1 1/2"-3/4" CLEAN DRAIN ROCK SHALL BE PLACED AROUND SHOE UP TO A MIN. OF 6" ABOVE DRAIN OUTLETS.
6. WHERE PLANTER STRIP EXISTS, HYDRANT SHALL BE PLACED SO FRONT PORT IS A MINIMUM OF 24" BEHIND FACE OF CURB.
7. WHERE INTEGRAL S/W & CURB EXISTS, HYD. SHALL BE PLACED AT BACK OF SIDEWALK, OR AS DIRECTED BY ENGINEER.
8. BURY OF HYDRANT SHALL BE MEASURED FROM FINISHED GRADE TO BOTTOM OF CONNECTING PIPE.
9. THRUST BLOCK AT FIRE HYDRANT TEE SHALL HAVE A 3.7 SQ. FT. BEARING AREA.
10. HYDRANT VALVE SHALL BE RESILIENT WEDGE GATE VALVE ONLY.
11. WHERE NO SIDEWALK EXISTS, PLACE A 5'x 5'x 4" THICK A.C. OR CONC. APRON AROUND HYDRANT.

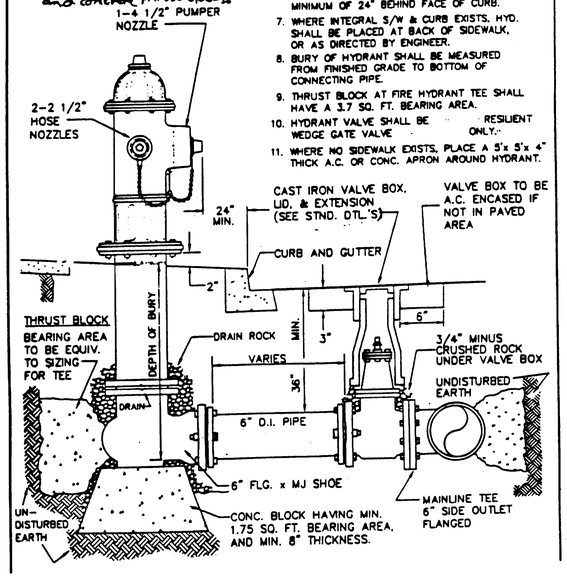

BLOW-OFF SIZES REQUIRED :	
MAIN SIZE	BLOW-OFF SIZE
4" TO 6"	2"
8" TO 12"	4"
14" TO 18"	6"
20" & UP	PER ENGR.

NOTES:

1. BACKFILL WITH SELECT CRUSHED AGGREGATE A MINIMUM OF 6" ON ALL SIDES.
2. ON TEMPORARY BLOW-OFFS ONLY, AN MJ CAP TAPPED 4" OR 6" MAY BE SUBSTITUTED FOR REDUCER.
3. TEMPORARY BLOW-OFF IS ONE REMOVED AT THE END OF PROJECT CONSTRUCTION. A PERMANENT BLOW-OFF REMAINS ON THE PROJECT AFTER ACCEPTANCE.
4. PLACE BLOW-OFF STANDPIPE 3 FT. INSIDE R.O.W. LINE AT END OF STREET (2FT. FROM BARRICADE).

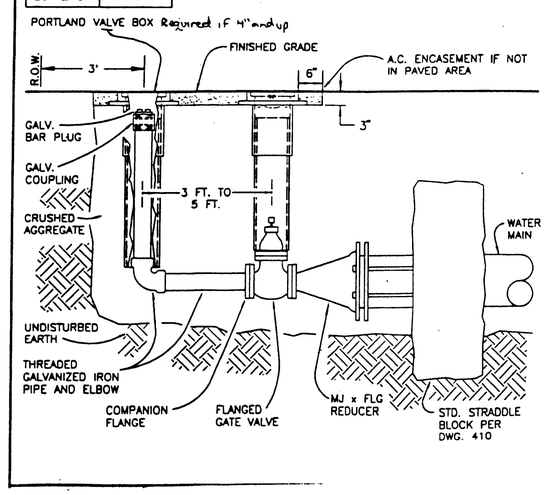

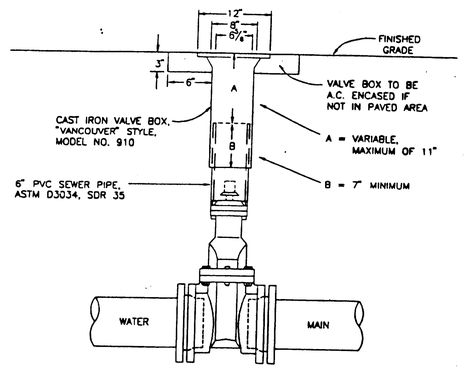

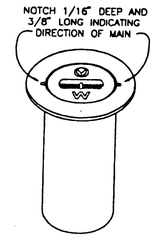

NOTES:

1. VALVE BOXES SHALL BE CENTERED DIRECTLY OVER THE VALVE NUT IN A VERTICAL POSITION.
2. VALVE BOX TOP SHALL BE ADJUSTED TO MEET FINISHED GRADE.
3. PVC SHALL BE ONE CONTINUOUS PIECE - NO BELLS OR COUPLERS.

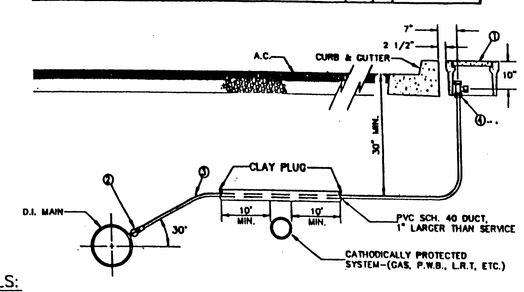

MATERIALS:

1. BROOKS METER BOX, BODY NO. 37, LID AND COVER NO. 37-S.
2. MUELLER CORP. STOP NO. ~~H-15000~~ H-15008 OR FORD ~~F600~~ F1000-4G SET CORP. STOP WITH OPERATING NUT AT 3 OR 9 O'CLOCK.
3. 1" SOFT TEMPER, TYPE 'K' COPPER TUBING COMPLYING WITH ASTM B-88.
4. MUELLER ANGLE METER STOP ~~NO. H-14255~~ H-14258 (FORD NO. ~~KV43-444W~~ KV43-444W-G)

NOTES:

1. SUBSTITUTES FOR ANY MATERIALS SHOWN SHALL BE APPROVED BY THE CITY ENGINEER.
2. ALL PIPE AND STRUCTURE ZONES SHALL BE BACKFILLED USING 3/4" MINUS CRUSHED AGG. AND COMPACTED TO 95% MAX. DENS. AS DETERMINED BY AASHTO T-180.
3. WHEN AN ACTIVE CATHODIC PROTECTED SYSTEM IS ENCOUNTERED, SCH. 40 PVC SHALL BE INSTALLED AS SHOWN ABOVE WITH CLAY PLUG.
4. METER BOX SHALL BE CENTERED OVER THE COMPLETED METER ASSEMBLY.
5. FOR VACANT RESIDENTIAL LOTS, LOCATE SINGLE SERVICE 18" INSIDE SIDE LOT LINE.
6. Taps into main line to be at 19" & at min.
7. Place meter stops at at 18" from property line and not in driveway approach.

CITY OF WEST LINN
APPROVED
DATE 11/22/99 BY: [illegible]

AS-BUILT SET 6/07/00

10/01/99
Date
M.F.K.
Designed
R.K.
Drawn
Checked By Date

REGISTERED PROFESSIONAL ENGINEER 17447 OREGON SEPTEMBER 28, 1984 M. FARES KERNIA
EXPIRES JUNE 30, 2001

KOSS REAL ESTATE
1098 S. ROSEMONT
WEST LINN, OR 97068
Phone: (503) 557-1144
Fax: (503) 557-1294

ROSEMONT SUMMIT II SUBDIVISION
PHASE A
CITY OF WEST LINN, OREGON
DETAIL SHEET

otak Incorporated
17355 SW Boones Ferry Rd.
Lake Oswego, Oregon 97035
Phone: (503) 635-3618
FAX: (503) 635-5395

L9754
Project No.
D754sc14
File No.
1
Sheet No.

Copyright 1999 ©