ROGERFIELD PHASE II
(PLANNING PHASES 2-5)
WEST LINN, OREGON

GENERAL NOTES

1. ALL CONSTRUCTION SHALL BE IN ACCORDANCE WITH THE "CITY OF WEST LINN STREET/UTILITY DESIGN AND CONSTRUCTION STANDARDS", DATED MAY 22, 2000 AND OAR'S CHAPTER 333. ALL STREET, STORM SEWER AND SANITARY SEWER CONSTRUCTION THAT IS NOT ADDRESSED IN THE CITY'S STANDARDS SHALL BE IN ACCORDANCE WITH APWA STANDARDS. ALL WATER SYSTEM CONSTRUCTION THAT IS NOT ADDRESSED IN THE CITY'S STANDARDS SHALL BE IN ACCORDANCE WITH AWWA STANDARDS. CONTRACTOR TO OBTAIN A COPY OF THE GEOTECHNICAL REPORT PREPARED FOR THIS PROJECT PRIOR TO CONSTRUCTION.
2. PRIOR TO ANY CONSTRUCTION, LOCATIONS OF EXISTING UTILITIES SHALL BE VERIFIED BY THE CONTRACTOR. WHEN ACTUAL CONDITIONS DIFFER FROM THOSE SHOWN ON THE PLANS, THE CONTRACTOR SHALL NOTIFY THE ENGINEER PRIOR TO PROCEEDING WITH CONSTRUCTION.
3. ORGANIC AND NON-DESIRABLE MATERIALS SHALL BE REMOVED FROM THE CONSTRUCTION AREA AS DIRECTED BY THE GEOTECHNICAL ENGINEER.
4. ALL FILL AREAS SHALL BE STRIPPED OF ORGANIC MATERIAL. FILL WILL BE PLACED IN 6-INCH LAYERS AND COMPACTED TO 95 PERCENT RELATIVE MAXIMUM DENSITY ACCORDING TO AASHTO T-180 STANDARDS. LANDSCAPE AREAS SHALL BE COMPACTED TO 90 PERCENT. THE CONTRACTOR SHALL PROVIDE COMPACTION TESTING, ONE FOR EVERY 10,000 SQUARE FEET OF AREA AND FOR EVERY 2 LAYERS OR 16" AND EVERY 100 LINEAR FEET OF FILL PLACED. COMPACTION REPORTS FROM A NATIONALLY ACCREDITED TESTING LAB SHALL BE SUPPLIED TO THE ENGINEER. A COPY OF THE REPORTS SHALL BE GIVEN TO THE CITY.
5. CONTRACTOR SHALL LEAVE ALL AREAS OF THE PROJECT FREE OF DEBRIS AND UNUSED CONSTRUCTION MATERIALS.
   a. AREAS TO BE LANDSCAPED SHALL BE SMOOTHED AND LEFT TO THE GRADES INDICATED ON THE GRADING PLAN, PLUS OR MINUS 0.1 FOOT.
   b. ALL DISTURBED AREAS NOT TO BE LANDSCAPED SHALL BE SEEDED PER EROSION CONTROL NOTES ON APPROVED GRADING PERMIT SET.
   c. ALL EXCESS/EXTRA MATERIAL SHALL BE REMOVED FROM THE SITE.
6. ANY CHANGES FROM THE APPROVED PLANS SHALL BE REQUESTED BY THE CONTRACTOR IN WRITING. THE DESIGN ENGINEER AND THE CITY OF WEST LINN'S PROJECT ENGINEER MUST APPROVE THE CHANGE PRIOR TO ITS IMPLEMENTATION. COMPLEXITY OF MODIFICATION WILL DETERMINE IF REVISED PLANS ARE REQUIRED.
7. CITY OF WEST LINN DETAILS SHALL BE USED AT LOCATIONS AS SPECIFIED IN THE PLANS, SEE DETAIL SHEETS.
8. DURING CONSTRUCTION, ALL EROSION CONTROL MEASURES SHALL CONFORM TO CLACKAMAS COUNTY EROSION CONTROL STANDARDS.
9. IN CASE OF A DISCREPANCY BETWEEN THE DRAWINGS AND THE FIGURES WRITTEN THEREON, THE FIGURES SHALL BE DEEMED TO GOVERN.
10. THE OWNER WILL SUPPLY ONE SET OF STAKES FOR EACH CONSTRUCTION OPERATION AS DESCRIBED IN THE CONTRACT DOCUMENTS AND SPECIFICATIONS. THE CONTRACTOR SHALL DESIGNATE A REPRESENTATIVE OR REPRESENTATIVES WHO ARE AUTHORIZED TO REQUEST STAKES. STAKING REQUESTS FROM AUTHORIZED REPRESENTATIVE SHALL BE MADE TO DAVE LIDEN AT OTAK (503-699-2401) AT LEAST 48 HOURS IN ADVANCE OF THE NEED FOR SAID STAKES. ONLY REQUESTS FROM AUTHORIZED REPRESENTATIVES WILL BE HONORED. ANY RESTAKING WILL BE DONE AT THE EXPENSE OF THE CONTRACTOR.
11. WEEK DAY WORK HOURS ARE 7:00 AM TO 6:00 PM; SATURDAY, SUNDAY AND HOLIDAY WORK HOURS ARE LIMITED TO 9:00 AM TO 6:00 PM.
12. THE CITY OF WEST LINN SHALL BE PRESENT WHEN TESTING IS PERFORMED AND SUPPLIED WITH A COPY OF TEST RESULTS. ALL FACILITIES WILL BE ACCEPTED BY THE CITY PRIOR TO CONNECTION TO EXISTING SYSTEMS.
13. ALL FEES FOR STREET TREES SHALL BE PAID TO THE CITY OF WEST LINN PARKS AND RECREATION DEPT.
14. NO BUILDING PERMITS SHALL BE ISSUED UNTIL ALL REQUIRED IMPROVEMENTS HAVE BEEN DEEMED SUBSTANTIALLY COMPLETE.
15. THE CONTRACTOR SHALL REMOVE ALL SOFT OR OTHERWISE UNSUITABLE MATERIAL AT SUBGRADE AND REPLACE WITH APPROVED MATERIAL AT THE DIRECTION OF THE PROJECT GEOTECHNICAL ENGINEER. THE CONTRACTOR SHALL COMPACT TO A LINE ONE FOOT BEHIND THE CURB.
16. FINAL SUBGRADE PROOF-ROLL WITH 10 CY TRUCK LOADED WITH ROCK IS REQUIRED PRIOR TO PLACING AGGREGATE BASE.
17. FINAL BASE ROCK PROOF ROLL WITH 10 CY TRUCK LOADED WITH ROCK IS REQUIRED PRIOR TO PAVING. BASE ROCK TO BE COMPACTED TO 95 PERCENT RELATIVE MAXIMUM DENSITY ACCORDING TO AASHTO T-180 STANDARDS.
18. PLEASE NOTE CITY OF WEST LINN STANDARD CONSTRUCTION SPECIFICATION SECTION 505.03.11 FOR WEATHER RELATED LIMITATIONS ON THE PLACEMENT OF ASPHALTIC CONCRETE.
19. THE DENSITY OF THE COMPACTED BASE LIFT OF AC SHALL BE AT LEAST 92% OF RICE IN CONFORMANCE WITH AASHTO T209 AS MODIFIED BY THE OREGON STATE HIGHWAY DEPARTMENT.
20. THE DENSITY OF THE COMPACTED TOP LIFT OF AC SHALL BE AT LEAST 92% OF RICE IN CONFORMANCE WITH AASHTO T209 AS MODIFIED BY THE OREGON STATE HIGHWAY DEPARTMENT.
21. DENSITY TESTS WILL BE REQUIRED FOR TRENCH BACKFILL AND ALPHALT, PER THE CITY OF WEST LINN STANDARD CONSTRUCTION SPECIFICATIONS. COPIES OF ALL REPORTS ARE TO BE SUPPLIED TO THE CITY INSPECTOR AND DESIGN ENGINEER.
22. CONTRACTOR SHALL SUBMIT SCHEDULE DETAILING SEQUENCE OF CONSTRUCTION PRIOR TO THE PRE-CONSTRUCTION MEETING.
23. THE STRENGTH OF CONCRETE USED FOR CURBS, GUTTERS AND SIDEWALKS SHALL BE 3300 psi.

BENCHMARK

ELEVATION DATUM IS BASED ON AN ALUMINUM CAP AT THE CENTERLINE INTERSECTION OF BEACON HILL DRIVE AND BEACON HILL COURT. ELEVATION = 476.40.

LOCATING EXISTING UTILITIES

--- 48 HOUR NOTICE REQUIRED PRIOR TO EXCAVATION ---

ONE CALL SYSTEM (GENERAL TELEPHONE, NORTHWEST NATURAL GAS, U.S. WEST, U.S. SPRINT)	(503) 246-6699
PORTLAND GENERAL ELECTRIC	(503) 643-5454, EXT. 312, 313, 314
TCI CABLE TELEVISION	243-7491
REPAIR EMERGENCIES	
NORTHWEST NATURAL GAS	(503) 226-4211, EXT. 4413
CITY OF WEST LINN WATER OPERATIONS SANITARY SEWER OPERATIONS	(503) 656-3535

THE CONTRACTOR, IN LOCATING AND PROTECTING UNDERGROUND UTILITIES, MUST COMPLY WITH THE REGULATIONS OF O.R.S. 757.541 TO 757.571

ATTENTION EXCAVATORS: Oregon law requires you to follow rules adopted by the Oregon Utility Notification Center. Those rules are set forth in OAR 952-001-0010 through OAR 952-001-0090. You may obtain copies of these rules from the Center by calling (503) 232-1987. If you have any questions about the rules, you may contact the call Center. YOU MUST NOTIFY THE CENTER AT LEAST 2 BUSINESS DAYS, BUT NOT MORE THAN 10 BUSINESS DAYS, BEFORE COMMENCING AN EXCAVATION. CALL (503) 246-6699.

STORM AND SANITARY SEWER NOTES

U1. MANHOLE CONSTRUCTION SHALL BE IN ACCORDANCE WITH THE CITY OF WEST LINN'S PUBLIC WORKS STANDARDS. MANHOLES SHALL CONFORM TO ASTM C-478.

U2. TRENCH BEDDING, PIPE ZONE AND BACKFILL IN PAVED AREAS WILL BE 3/4-INCH MINUS CRUSHED AGGREGATE COMPACTED TO 95 PERCENT RELATIVE MAXIMUM DENSITY, AASHTO T-180. UNPAVED AREAS OUTSIDE ROW TO BE CLASS A NATIVE BACKFILL MATERIAL EXCEPT BEDDING AND PIPE ZONE MATERIAL (SEE WEST LINN DETAIL WL-200 ON SHEET C8.1) UNLESS OTHERWISE NOTED. CLASS A NATIVE BACKFILL TO BE COMPACTED TO A MINIMUM OF 95 PERCENT OF THE MAXIMUM DRY DENSITY, AASHTO T-180.

U3. ALL PUBLIC STORM DRAINS SHALL BE CONSTRUCTED WITH PVC ASTM F794 (ULTRA-RIB OR EQUAL), EXCEPT CULVERTS AS SPECIFIED.

U4. ALL PUBLIC SANITARY SEWERS SHALL BE CONSTRUCTED WITH PVC D3034 PIPE. PRIOR TO ACCEPTANCE, ALL PUBLIC

U5. SANITARY SEWERS SHALL BE TV, PRESSURE, AND DEFLECTION TESTED IN ACCORDANCE WITH THE CITY OF WEST LINN'S REQUIREMENTS. ALL PUBLIC STORM SEWERS SHALL BE TV AND DEFLECTION TESTED.

U6. WATER TIGHT PLUGS SHALL BE INSTALLED IN THE ENDS OF SANITARY AND STORM LATERALS AND A 2" X 4" WOOD MARKER PLACED AT THE LATERAL END FROM PIPE INVERT TO AT LEAST 36" ABOVE THE FINISH GRADE. THE 2" X 4" TOP SHALL BE PAINTED (GREEN FOR SANITARY) AND (WHITE FOR STORM) AND MARKED WITH THE DEPTH OF THE LATERAL MEASURED FROM THE FINISHED GROUND ELEVATION TO THE INVERT OF PIPE AT THE TIME THE CURBS ARE POURED, AN (S FOR SANITARY) AND (SD FOR STORM) SHALL BE STAMPED IN THE TOP OF THE CURB AT EACH

U7. POINT A LATERAL CROSSES BENEATH THE CURB LINE.

U8. ALL SANITARY SEWER MANHOLES SHALL BE VACUUM TESTED.

U9. CONSTRUCTION NOTES FOR STORM AND SANITARY SEWERS ARE ON SHEET C4.0 AND C3.0 RESPECTIVELY. PRIOR TO MAKING THE CONNECTION TO THE EXISTING SYSTEMS, THE SANITARY SEWER AND STORM SEWER SHALL BE ACCEPTED BY THE CITY.

WATER NOTES

W1. ALL WATER PIPE AND FITTINGS SHALL BE DUCTILE IRON CLASS 52 AND CONFORM TO STANDARD CITY SPECIFICATIONS AND DETAILS. ALL WATER SERVICE LINES TO BE TYPE K COPPER PIPE PER CITY OF WEST LINN SPECIFICATIONS. ALL 14" WATER PIPE JOINTS ARE TO BE PUSH-ON FIELD-LOK RESTRAINED JOINTS (OR APPROVED EQUAL) AND PIPE FITTINGS TO BE MEGALUG (OR APPROVED EQUAL) WITH THE SAME MATERIAL AND CLASS AS PIPE.

W2. WATERLINES SHALL BE PRESSURE TESTED FOLLOWING COMPLETION. PRESSURE TESTS SHALL BE IN ACCORDANCE TO THE CITY OF WEST LINN'S STANDARDS WITH A MINIMUM TEST PRESSURE OF 180 PSI. WHEN THE PRESSURE TEST IS PERFORMED, THE TEST PRESSURE OF 180 PSI SHALL STABILIZE BEFORE THE TEST BEGINS. SERVICE LINES WILL ALSO BE TESTED TO THE METER LOCATION .

W3. PRIOR TO BEING PLACED INTO SERVICE, THE WATERLINE SHALL BE FLUSHED, STERILIZED AND FLUSHED AGAIN ALL IN ACCORDANCE WITH STANDARD METHODS OF THE HEALTH DIVISION, DEPARTMENT OF HUMAN RESOURCES, STATE OF OREGON.

W4. PRIOR TO CONNECTION TO EXISTING WATERLINE, A SAMPLE SHALL BE TAKEN AND TESTED FOR BACTERIOLOGICAL QUALITY. RESULTS MUST BE WITHIN STANDARDS OF THE STATE OF OREGON.

W5. CONCRETE THRUST BLOCKING SHALL BE PROVIDED AT ALL WATERLINE FITTINGS AS REQUIRED BY CITY STANDARDS. BLOCKING SHALL BE 3000 PSI CONCRETE PLACED AGAINST UNDISTURBED EARTH AND CLEAR OF JOINT ACCESSORIES. BEARING AREA OF THRUST BLOCK SHALL BE COMPUTED ON THE BASIS OF ALLOWABLE SOIL BEARING PRESSURE. ALL PIPE FITTINGS IN CONTACT WITH CONCRETE SHALL BE WRAPPED IN PLASTIC.

W6. MINIMUM COVER OVER WATERLINES IS TO BE 36" AS MEASURED FROM FINISH GRADE TO TOP OF PIPE. MINIMUM VERTICAL SEPARATION BETWEEN WATERLINE AND SANITARY SEWER AT A CROSSING IS 18". SANITARY SEWER AT WATERLINE CROSSINGS WITH LESS THAN THE MINIMUM VERTICAL SEPARATION SHALL BE CONSTRUCTED OF DUCTILE IRON PIPE WITH WATERTIGHT JOINTS. IN SUCH CASES THE 18-FOOT LENGTH OF SANITARY SEWER SHALL BE CENTERED AT THE CROSSING.

W7. ALL WATER SERVICES SHALL BE SEPARATED BY A MINIMUM HORIZONTAL DISTANCE OF 2' AT THE MAINLINE.

W8. FIRE HYDRANT ASSEMBLIES TO BE MUELLER CENTURION A-423 OR CLOW MEDALLION F-2545 AND ARE TO BE INSTALLED PER CITY OF WEST LINN STANDARD SPECIFICATIONS AND DETAILS

W9. TRENCH BEDDING, PIPE ZONE AND BACKFILL IN PAVED AREAS WILL BE 3/4-INCH MINUS CRUSHED AGGREGATE COMPACTED TO 95 PERCENT RELATIVE MAXIMUM DENSITY, AASHTO T-180. UNPAVED AREAS OUTSIDE ROW TO BE CLASS A NATIVE BACKFILL MATERIAL EXCEPT BEDDING AND PIPE ZONE MATERIAL (SEE WEST LINN DETAIL WL-200 ON SHEET C8.1) UNLESS OTHERWISE NOTED. CLASS A NATIVE BACKFILL TO BE COMPACTED TO A MINIMUM OF 95 PERCENT OF THE MAXIMUM DRY DENSITY, AASHTO T-180.

W10. GATE VALVES SHALL BE RESILIENT SEAL, NOT RISING STEM WITH "O" RING PACKING, COMPLYING WITH AWWA CLASS "C" SPECIFICATIONS. THE VALVES SHALL BE DESIGNED TO WITHSTAND A WORKING PRESSURE OF 150 PSI. BUTTERFLY VALVES SHALL BE RUBBER SEAL TYPE AND BUBBLE-TIGHT AT 150 PSI, AND SHALL CONFORM TO AWWA C504. VALVE BOXES SHALL BE "VANCOUVER" PATTERN.

W11. ALL WATER LINE PRESSURE AND CHLORINATION TESTING SHALL BE PERFORMED WITH THE CITY PRESENT.

W12. CONSTRUCTION NOTES FOR WATERLINE ARE ON SHEET C5.0.

VICINITY MAP

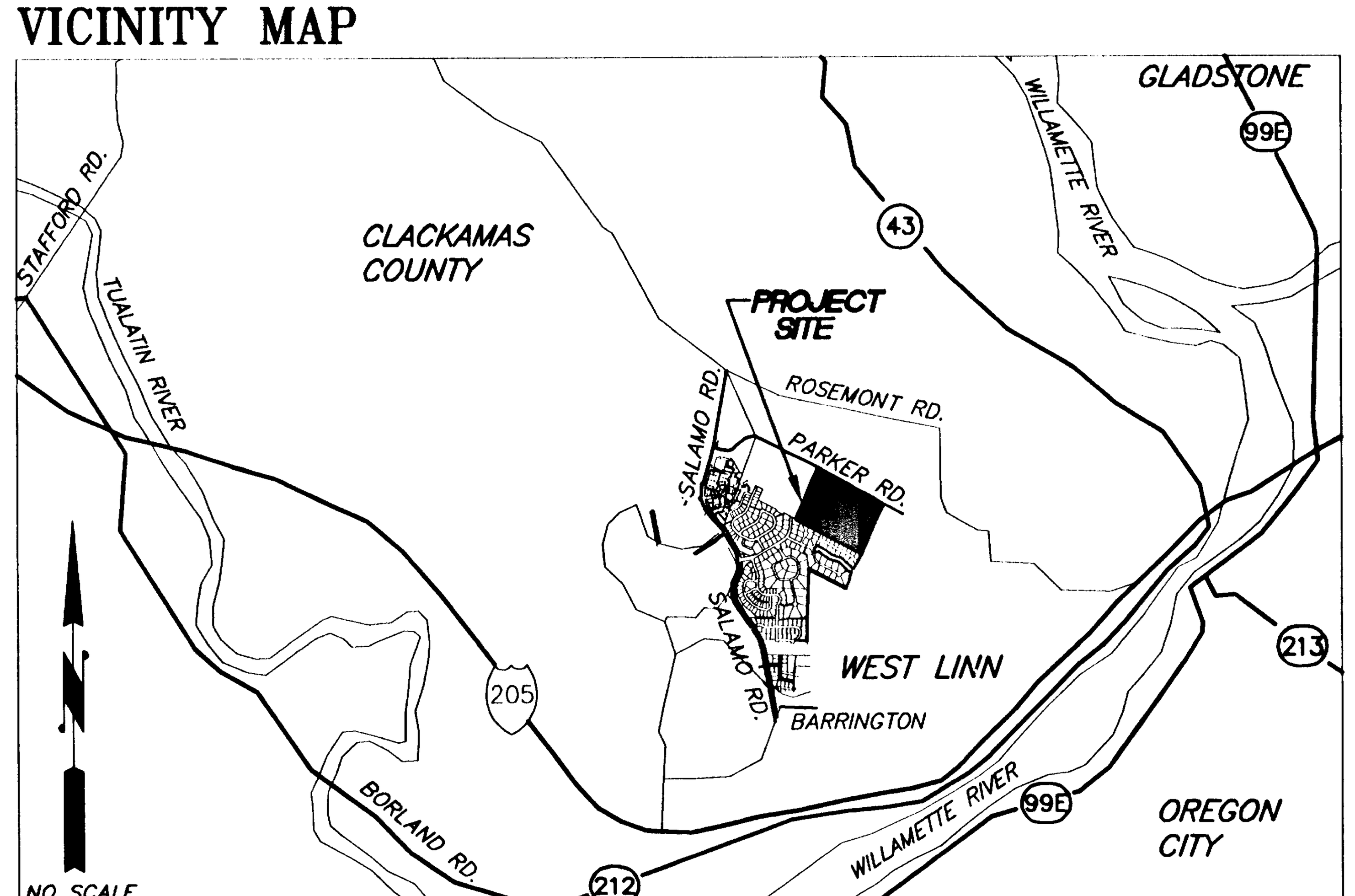

SHEET INDEX

C1.0	COVER SHEET, PROJECT MAP, VICINITY MAP, PROJECT TEAM
C1.1	CONDITIONS OF APPROVAL
C1.2	TYPICAL SECTIONS
C1.3	EXISTING CONDITIONS/ DEMOLITION PLAN
C1.4	COMPOSITE GRADING PLAN
C1.5	COMPOSITE UTILITY PLAN
C2.0	STREET PLAN - SABO LANE AND NOMIE WAY
C2.1	STREET PROFILE - SABO LANE, END TO STA 12+25
C2.2	STREET PROFILE - SABO LANE, STA 12+25 TO 8+00, NOMIE WAY AND CRESCENT DRIVE
C3.0	SANITARY SEWER PLAN
C3.1	SANITARY SEWER PROFILE - SABO LANE END TO STA 12+25
C3.2	SANITARY SEWER PROFILE - SABO LANE STA 12+25 TO STA 8+00 NOMIE WAY AND CRESCENT DRIVE
C4.0	STORM DRAIN PLAN
C4.1	STORM DRAIN PROFILE - SABO LANE END TO STA 12+25
C4.2	STORM DRAIN PROFILE - SABO LANE STA 12+25 TO 8+00 NOMIE WAY AND CRESCENT DRIVE
C4.3	CULVERT CROSSING PLAN AND PROFILE
C4.4	STORM WATER DETENTION FACILITY A
C4.5	STORM WATER DETENTION FACILITY B
C4.6	PRIVATE STORM DRAIN PLAN
C4.7	PRIVATE STORM DRAIN PROFILE
C5.0	WATER PLAN
C5.1	WATER PROFILE
C5.2	WATER PROFILE
C5.3	WATER INTERSECTION DETAILS
C6.0	PUBLIC TRAIL PLAN
C7.0	STREET TREE LANDSCAPING PLAN
C7.1	DETENTION POND LANDSCAPING PLAN
C7.3	CREEK CROSSING LANDSCAPE PLAN PER COA #4H
C8.0	STREET AND STORM DETAILS
C8.1	STORM AND SANITARY DETAILS
C8.2	STORM DRAIN DETAILS
C8.3	WATER DETAILS

APPLICANT

Name:	Centex Homes 16520 SW Upper Boones Ferry Road Suite #200 Portland, Oregon 97224
Contact:	David Cady
Phone:	(503) 608-3060
Fax:	(503) 608-3061

CIVIL ENGINEER/SURVEYOR

Name:	Otak, Incorporated 17355 SW Boones Ferry Road Lake Oswego, Oregon 97035
Contact:	Scott Shumaker
Phone:	(503) 635-3618
Fax:	(503) 635-5395

GEOTECHNICAL ENGINEER

Name:	Northwest Geotech, Inc. 9120 SW Pioneer Court, Suite B Wilsonville, OR 97070
Contact:	Tom Ginsbach
Phone:	(503) 682-1880
Fax:	(503) 682-8753

SITE INFORMATION

Site Size:	14.23 Acres
Zoning:	Clackamas County R-3 AND R-20
Proposed Use of Property:	Subdivision for 52 Single Family Residential Units
Legal Description:	Clackamas County Assessor Map 2S1E25 Tax Lot 1800

PROJECT MAP

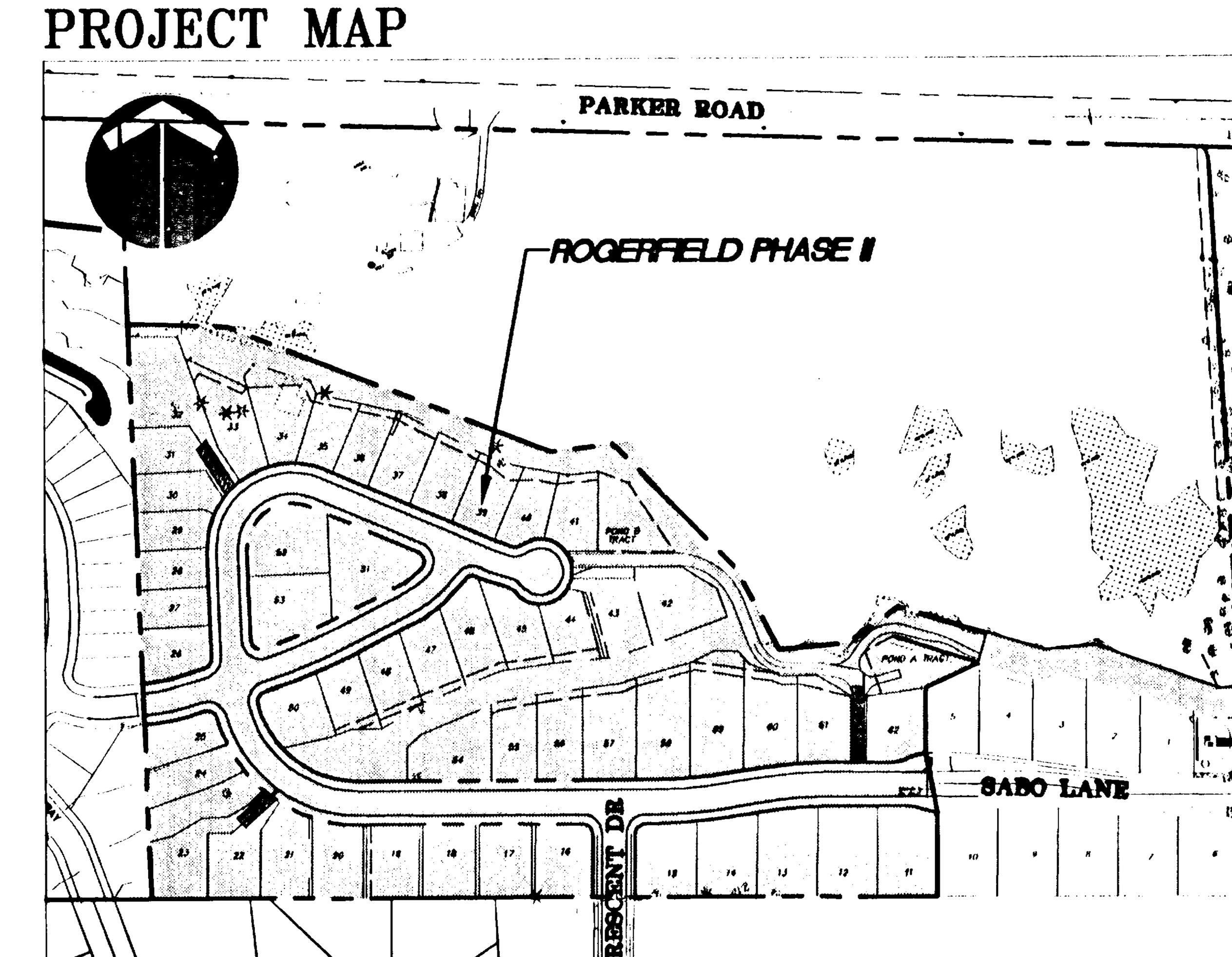

These As-built Plans were compiled from survey data, data collected from others, and periodic observation during construction. It is suggested that these plans be used in conjunction with field verification of location and elevations of improvements in question. These plans are an accurate record of public improvements to the best of my information, knowledge and belief.

Signature 2-26-03
Date

ASBUILT SUBMITTAL TO CITY OF WEST LINN 02-26-03

06/14/02
Date
SAS
Designed
KM, TR, SR
Drawn
Checked By Date

REGISTERED PROFESSIONAL ENGINEER 58,361 OREGON JULY 11, 2000 SCOTT SHUMAKER
EXPIRES: 06/30/2004

"AS-BUILT"
DATE 2-26-03 BY S SHUMAKER

CENTEX HOMES
AMERICA'S #1 HOMEBUILDER
16520 SW Upper Boones Ferry Road, Suite #200
Portland, OR 97224
Phone: (503) 608-3060
Fax: (503) 608-3061

Rogerfield Phase II-52 Lots

CITY OF WEST LINN, OREGON
COVER SHEET

otak
Incorporated
17355 SW Boones Ferry Road
Lake Oswego, OR 97035-5217
Phone: (503) 635-3618
FAX: (503) 635-5395

10822
Project No.
D822C10
File No.
C1.0
Sheet No.

Copyright 2002 ©

FINAL CONDITIONS OF APPROVAL

SUB-99-02/ZC-99-03/MISC-99-05

The unpaved pathway between Street D via Lot 60's flag lot stem across the open area to the vicinity of Street A shall be paved to provide for the connectivity and TPR requirements of Chapter 85. A 3-foot high cyclone fence, or alternative fence approved by the Planning Director consistent with this Final Order, shall be installed on each side of that portion of the path and dedicated corridor that passes through Lot 60 adjacent to Lot 58. The path shall be 8 feet wide and the dedicated corridor through which it passes shall be 20 feet wide for that section near Lot 60.

The applicant shall submit a design review application for future townhome lots and design review development in Phase 8 and in Parcel 2. This will involve administrative/ Planning Director review of those applications.

The applicant shall provide street names pursuant to standards of Chapter 85.

The applicant shall make the following dedications or grants and improvements to natural resource areas:

a. The applicant shall dedicate Parcel 1 (including all transition areas) to the City of West Linn. The applicant may dedicate this area in phases consistent with the proposed development phases.

   - The applicant shall dedicate the area from the centerline of the drainageway (or the pond) to the edge of the proposed development phase (e.g., from the centerline of Tanner Creek to the north boundary of lots 51-55 [and the water quality facility] when Phase 1 is developed or platted; from the centerline of Tanner Creek to the north boundary of lots 56-60 and from the centerline of the dry swale to the north boundary of lot 60 when Phase 2 is developed or platted; from the centerline of the dry swale to the north boundary of lots 61-95 and the right-of-way of Street D when Phase 3 is developed or platted, etc.).

b. The applicant shall install appropriate markers to delineate private and public spaces adjacent to those transition areas.

c. The applicant shall dedicate an easement over all of Parcel 1 to the City for maintenance purposes when Phase 1 is developed or platted.

d. No later than the platting of Phase 7, the applicant shall dedicate the wetland and associated transition areas of Parcel 3 to the City or a public or private conservation organization or foundation with the written provision that the natural area may not be developed; provided, prior to or concurrent with such dedication, the applicant shall submit an application to, and receive approval of, an application from the Planning Director to partition Parcel 3 such that the area that will not be dedicated will be divided into lots and/or open space tracts consistent with standards applicable to such a partition.

e. No later than the platting of Phase 6, the applicant shall dedicate the eastern approximately ¼ of Parcel 2 (at least east of the centerline of the drainageway) to the City or a public or private conservation organization or foundation with the written provision that the natural area may not be developed. In the alternative, the applicant may dedicate a conservation easement over that area subject to the same written restriction.

f. Before the applicant dedicates the land addressed in condition 4.d or e, or grant easement over the land addressed in condition 4.e to a private conservation group or foundation, the applicant shall submit to the Planning Director articles of incorporation, bylaws, and/or other relevant documents, and the Planning Director shall find such foundation or group is a legitimate charitable foundation properly created, funded, and capable of accepting and maintaining the natural resource areas as such.

g. The applicant shall install snow fencing around the boundaries of these parcels prior to construction of the abutting development phase to protect the resource. The snow fencing shall remain in place until construction of all abutting development phases is completed.

h. No later than the platting of Phase 5, the applicant shall restore the disturbed drainageway north of Lot 81 if the City Public Works Department has not already done so.

The applicant shall install half-street improvements for Parker Road, including 18-foot paved roadway and 6-foot planter strip and 6-foot sidewalk, on the south edge of Parker Road for the entire frontage of the site including Parcel 2 prior to Phases 6, 7, or 8 being platted, whichever comes first. There shall be no planter strip adjacent to Parcel 2's Oak forest.

Street H shall be constructed either in its entirety at the time Phase 1 is platted, or incrementally so that the first portion of Street H to the southern edge of the transition area of Tanner Creek shall be constructed in association with Phase 1. At such time that Phases 2 and 3 are constructed and prior to platting, the applicant shall be responsible for extending Street H across the creek to the intersection of Street A near Lot 40. At such time that Phases 4 and 5 are developed and prior to platting, the applicant shall be responsible for installing the final section from Lot 40 up to Parker Road. Street H shall have a half-street width of 16 feet within a 28-foot half-street right-of-way. The applicant shall acquire an easement from the adjacent property to construct the 8-foot driving lane and 2-foot shoulder. If no easement is provided, the applicant shall dedicate the additional 10 feet as right-of-way. (See map on page A-123.)

All planter strips shall be increased from 5-1/2 feet to 6 feet.

8. Regarding tree preservation:
   a. Snow fencing shall be installed 10 feet beyond the dripline of all trees within areas of any site work, or near any construction area. "Site work areas" and "near any construction areas" shall be defined as any area that could receive dirt or debris, or have the ground traversed with equipment or have the natural grade modified.
   b. Only if such fence placement at the dripline + 10-foot line is unfeasible, snow fencing may be installed out of the root zone and in a manner that prohibits any contact with the tree trunk.
   c. The City Arborist shall inspect and approve all on-site tree protection measures, and tree pruning, including placement of protection fences prior to the start of site work. It is the applicant's responsibility to contact the City Arborist and arrange for this approval to take place. No permits from Engineering, Planning, or Building Departments shall be issued without approval from the City Arborist regarding tree protection measures, and regarding proposed tree pruning of "trees to remain" on the site.
   d. All tree protection measures shall remain in place and fully functional for the entire time that site work and construction is taking place.
9. The segment of Street D from its intersection with Street E to the westerly edge of the property shall be constructed as a 32-foot street within a 56-foot right-of-way.
10. Streets B, C, E, and a portion of Street D shall be constructed as a 24-foot wide street within a 48-foot wide right-of-way.
11. Street C cul-de-sac shall be constructed with a paved radius of 30 feet.
12. An 8-inch diameter waterline shall be constructed in Street B and looped to the waterline in Street A. The tapping of water services off the 18-inch waterline in Parker Road shall not be allowed.
13. The sanitary sewer stub to the property to the west shall be installed at a depth which will provide adequate service to the property to the west. The depth of this sewer shall be as approved by the City Engineer.
14. The applicant shall provide an easement to connect to the sanitary sewer located east of the development. No construction plans for any improvements will be approved until this easement has been obtained.
15. The storm water detention facilities shall be sized for a 25-year storm event.
16. The setbacks shall be 5 feet in the front including porch, 18 feet from the sidewalk to front loading garages, 3 feet as the side yard setback, 10 feet as the rear setback, and 5 feet on the side street. All clear vision areas shall be satisfied on corner lots.
17. The subdivision name is "Rogerfield."
18. The alignment of sanitary sewer, water, and drainage lines at the rear of lots 51-65 may be shifted at the pre-construction phase to locate them in or closer to the transition area, subject to approval of the City Engineer. The applicant shall mitigate any impacts of such construction.
19. The width of the transition area for Tanner Creek near lots 80-74 shall be determined in the field by the City Engineer prior to platting Phase 1.
20. Subdivision phase boundaries shall be as shown on page A-122.

West Linn

MAY 27 1998

FILE

May 26,1999

Fares Kekhia, PE
OTAK
17355 SW Boones Ferry Rd.
Lake Oswego, OR.
97035

Re:Rogerfield Subdivision (Project# 09818)
(SUB 99-02)

Dear Feres:

I received your letter dated May 19,1999 and I agree that there can be significant benefits associated with a 28 foot street in terms of resource protection. Specifically, it is noted that Road H will flank a row of mature oak trees in the north, an extensive wetlands area and area of significant trees in the central area, plus a creek crossing and two water quality /detention ponds in the south area. In addition, Peter Spir, Associate Planner, spoke with the neighbor to the east, Gene Davis, who expressed concern that the road should not be too wide as to require inordinate amounts of fill on his property or excessively encroach upon the creek resource. Clearly, there are compelling natural resource protection issues that could be addressed and protected by using a narrower street.

It is acknowledged that Road H will tie into Beacon Hill Drive to become a defacto collector, but it is also acknowledged that the functional integrity of the road can be maintained even with a 28foot width so long as the adjacent property owners understand that there shall be no parking on the road as well as no direct access to Road H from any lot on either the Sabo or Davis properties. At such time that the Davis property is developed to the east, no direct access to Road H will be permitted. All access to lots will be via interior streets or alleys.

The sidewalk can be curb tight on Road H by authority of CDC Ch. 85 so as not to infringe on the resource areas.

2042 8th Avenue West Linn, OR 97068-4612
(503) 656-4211 • FAX (503) 656-4106

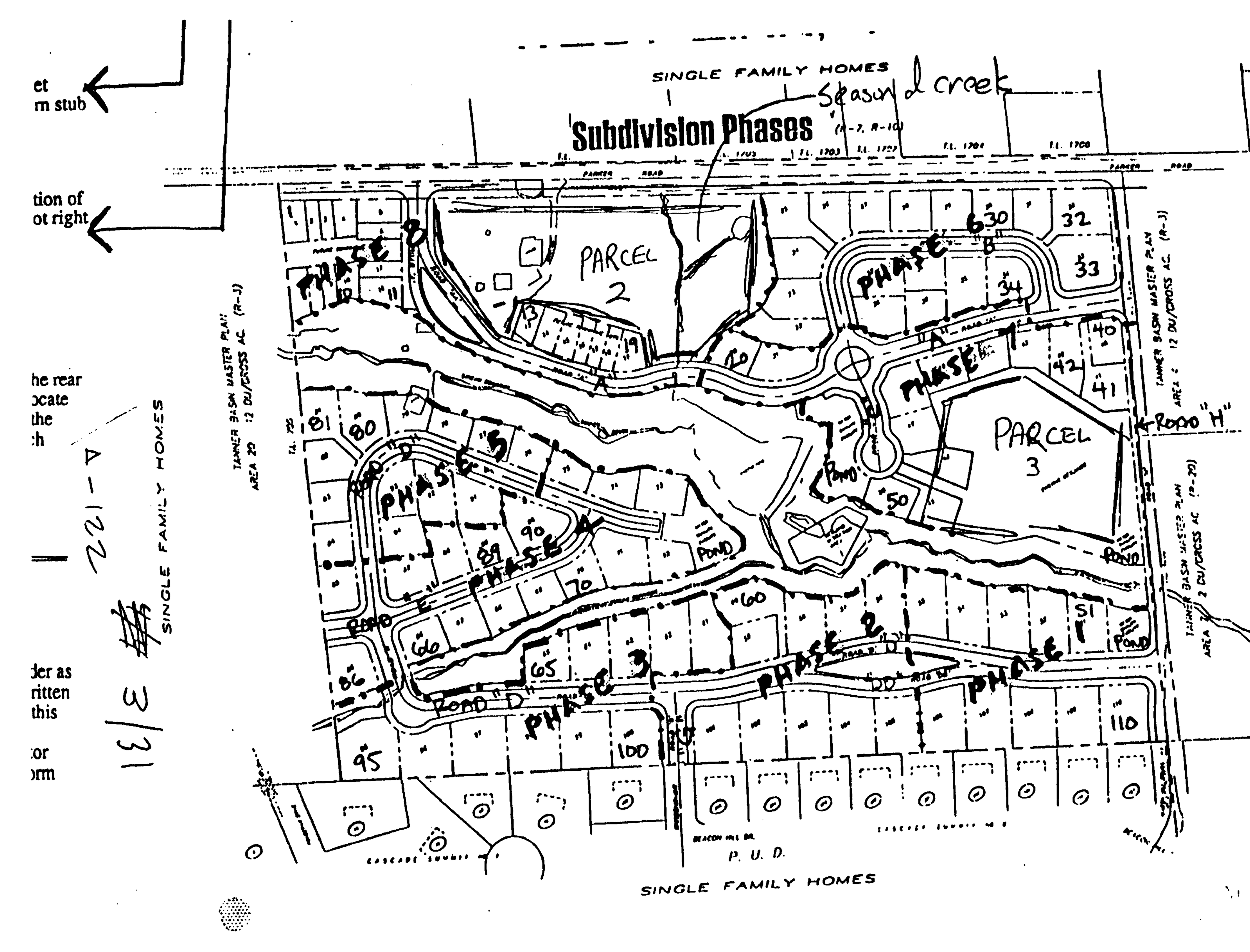

06/14/02
Date
SAS
Designed
KM, TR, SR
Drawn
Checked By Date

REGISTERED PROFESSIONAL ENGINEER 58,381 OREGON SCOTT SHUMAKER
EXPIRES: 06/30/2004

CENTEX HOMES
AMERICA'S #1 HOMEBUILDER
16520 SW Upper Boones Ferry Road, Suite 200
Portland, OR 97224
Phone: (503) 608-3060
Fax: (503) 608-3061

Rogerfield Phase II-52 Lots
CITY OF WEST LINN, OREGON
CONDITIONS OF APPROVAL

ASBUILT SUBMITTAL TO CITY OF WEST LINN 02-26-03

otak
Incorporated
17355 SW Boones Ferry Road
Lake Oswego, OR 97035-5217
Phone: (503) 635-3618
FAX: (503) 635-5395

10822
Project No.
D822C11
File No.
C1.1
Sheet No.
Copyright 2002 ©

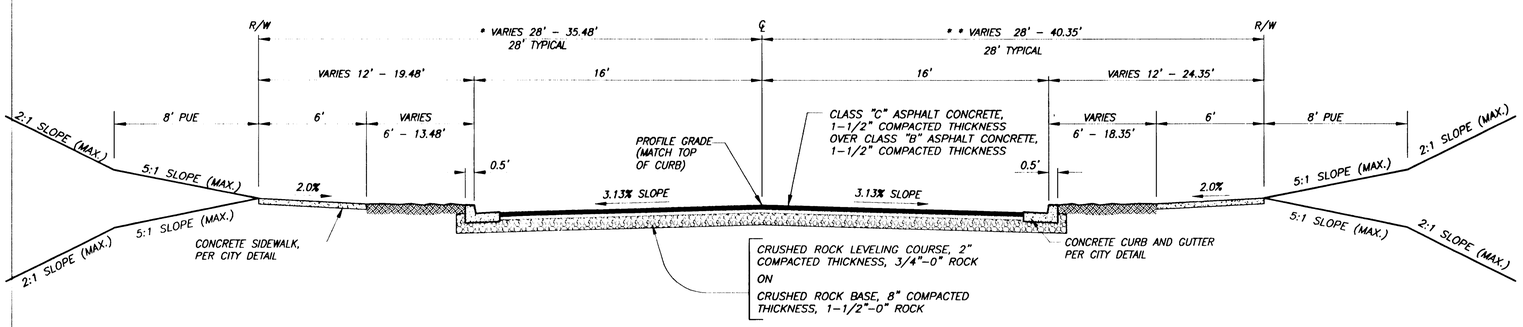

SABO LANE
(Sta. 10+00 to Sta. 19+94.85)

*(ROW Varies from 35.48' at Sta. 9+84.09 to 28.00' at Sta. 10+22.04)

**(ROW Varies from 40.35' at Sta. 10+00 to 28.00' at Sta. 10+46.68)

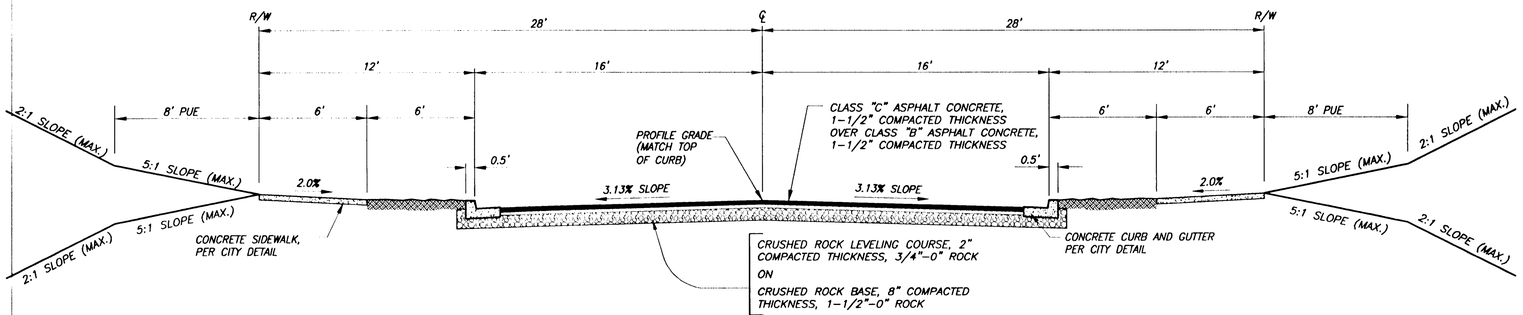

CRESCENT DRIVE
(Sta. 8+92.93 to Sta. 10+63.58)

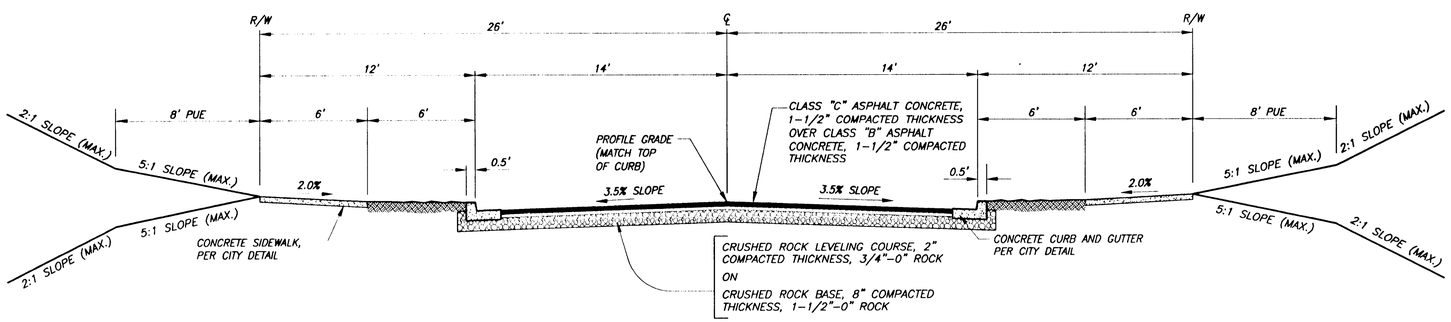

SABO LANE (Sta. 19+94.85 to 26+46.63),
NOMIE WAY (Sta. 10+00 to Sta. 14+70.29)

NOTE:

AS PER THE RECOMMENDATIONS OF THE SOILS ENGINEER IF THE PROJECT IS CONSTRUCTED IN WET WEATHER THE STREET SECTION MAY REQUIRE THE USE OF CRUSHED AGGREGATE MATERIAL AND GEOTEXTILE FABRIC TO HELP STABILIZE PAVEMENT SUBGRADES. FILLS TO BE PLACED ON EXISTING GROUND SLOPES IN EXCESS OF 5 HORIZONTAL TO 1 VERTICAL SHALL E BENCHED INTO THE EXISTING GROUND PER THE RECOMMENDATIONS OF THE GEOTECHNICAL ENGINEER. REFER TO THE GEOTECHNICAL REPORT PREPARED FOR THIS PROJECT SITE BY NORTHWEST GEOTECH, INC. DATED JUNE 13, 2001.

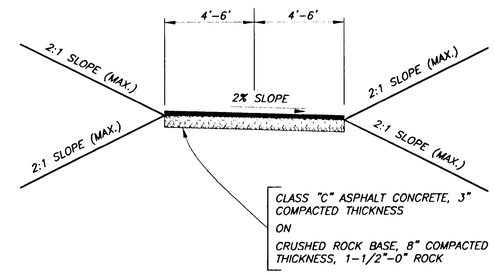

8'-12' WIDE PAVED PATH

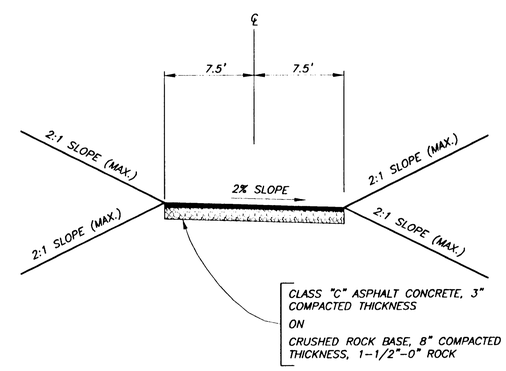

15' WIDE PAVED PATH
(SHED SECTION)

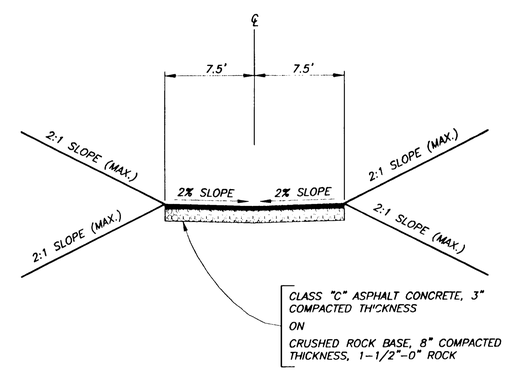

15' WIDE PAVED PATH
(VALLEY SECTION)

06/14/02
Date
SAS
Designed
KM, TR, SR
Drawn
Checked By Date

REGISTERED PROFESSIONAL ENGINEER
58361
OREGON
JULY 11, 2003
SCOTT SHUMAKER
EXPIRES: 06/30/2004

"AS-BUILT"
DATE 2-26-03 BY SAS

CENTEX HOMES
AMERICA'S #1 HOMEBUILDER
16520 SW Upper Boones Ferry Road, Suite #200
Portland, OR 97224
Phone: (503) 608-3060
Fax: (503) 608-3061

Rogerfield Phase II-52 Lots

CITY OF WEST LINN, OREGON
TYPICAL SECTIONS

ASBUILT SUBMITTAL TO CITY OF WEST LINN 02-26-03

otak Incorporated
17355 SW Boones Ferry Road
Lake Oswego, OR 97035-5217
Phone: (503) 635-3618
FAX: (503) 635-5395

10822
Project No.
D822C12
File No.
C1.2
Sheet No.

Copyright 2002 ©

F LIST
ale: 1
olved
2X005
SHANNONM 02/25/03 3:20pm --> R:\DWG\D822C12.DWG

XREF LIST
Ltscale: 1
Resolved
D822X005
D822x190
D822x400
D822x430

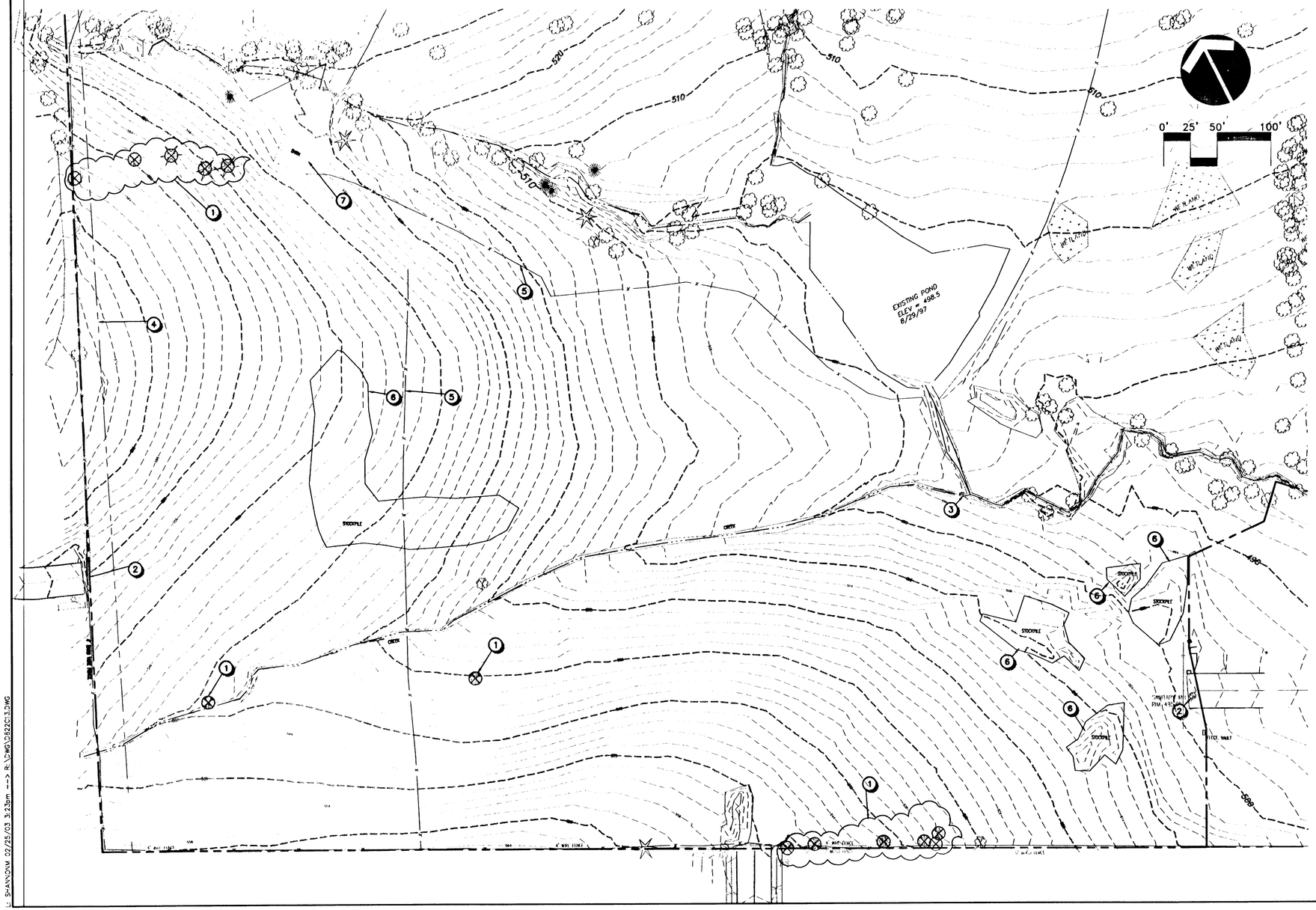

DEMOLITION NOTES

1. EXISTING TREE TO BE REMOVED AND DISPOSED OFF OFFSITE. NOTE, SEE APPROVED GRADING PERMIT CLEARING LIMITS FOR EXTENT OF TREE REMOVAL.
2. REMOVE STREET BARRICADE
3. REMOVE EXISTING 18" CULVERT AT TIME OF STORM CONSTRUCTION SEE SHEET C4.0
4. REMOVE EXISTING 14" RESTRAINED JOINT WATERLINE AND RELATED VALVES, MANHOLES. SEE DETAILED INSTRUCTIONS ON SHEET C5.0
5. REMOVE EXISTING FENCING
6. REMOVE EXISTING TOPSOIL STOCKPILES AND DISPOSE OF OFF SITE
7. EXISTING BARN TO BE REMOVED

06/14/02
Date
SAS
Designed
KM, TR, SR
Drawn
Checked By Date

CENTEX HOMES
AMERICA'S #1 HOME BUILDER
16520 SW Upper Boones Ferry Road, Suite #200
Portland, OR 97224
Phone: (503) 608-3060
Fax: (503) 608-3061

Rogerfield Phase II-52 Lots

CITY OF WEST LINN, OREGON

EXISTING CONDITIONS DEMOLITION PLAN

ASBUILT SUBMITTAL TO CITY OF WEST LINN 02-26-03

otak Incorporated
17355 SW Boones Perry Road
Lake Oswego, OR 97035-5217
Phone: (503) 635-3618
FAX: (503) 635-5395

10822
Project No.
D822C13
File No.
C1.3
Sheet No.

Copyright 2002 ©

L: S:\ANYONW 02/25/03 3:23am --> R:\DWG\D822C13.DWG

REF LIST
iscale: 1
esolved
822X005
822x190
822x230
822x400
822x430
822XWRG

LEGEND

EXISTING 2' CONTOUR
EXISTING 10' CONTOUR
CONSTRUCTED 2' CONTOUR — 522 —
CONSTRUCTED 10' CONTOUR — 530 —
CONSTRUCTED ROCKERY WALL
CLEARING LIMITS

THIS PLAN FOR REFERENCE ONLY

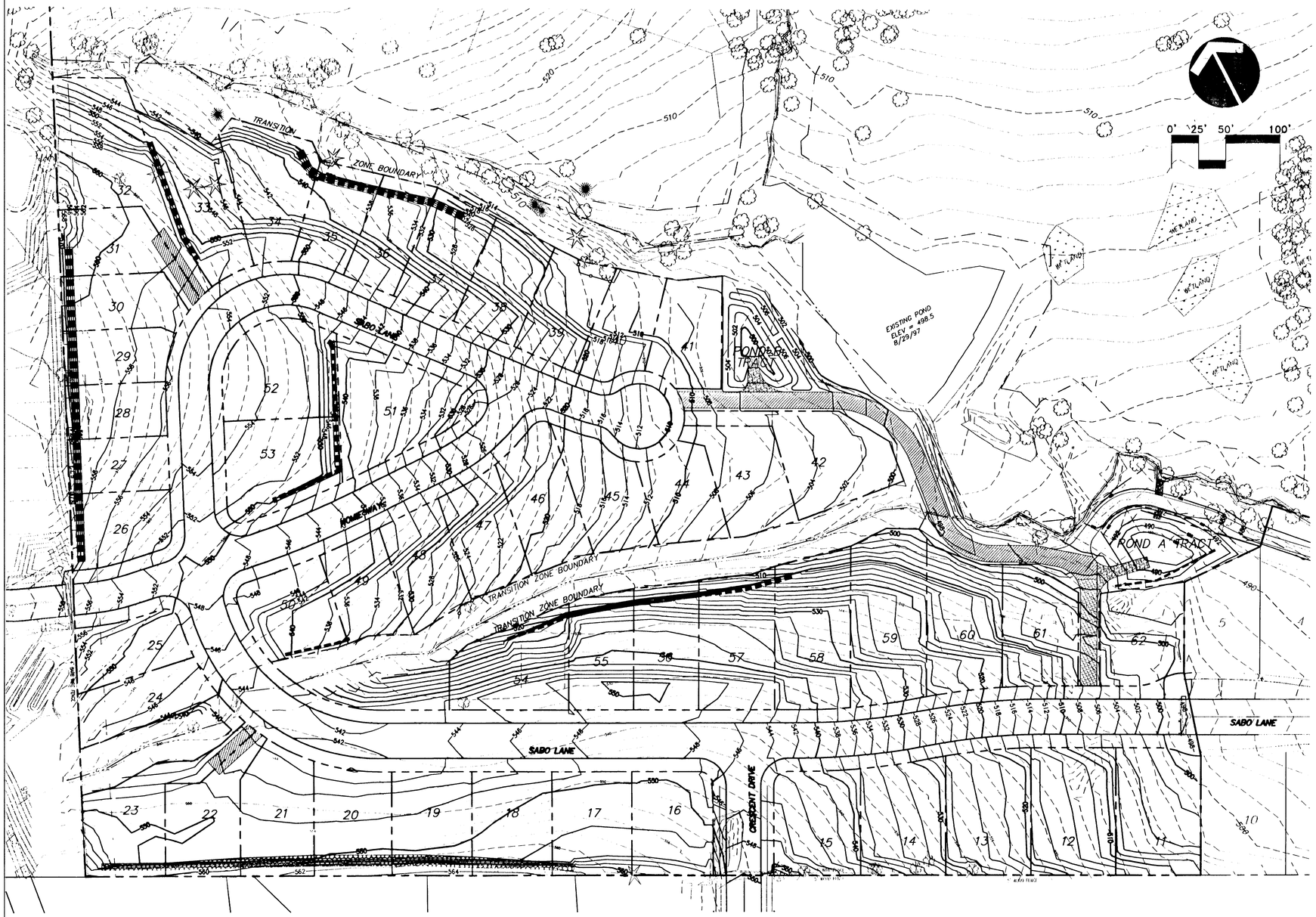

06/14/02
Date
SAS
Designed
KM, TR, SR
Drawn
Checked By Date

"AS-BUILT"
DATE 6-26-03 BY SAS

CENTEX HOMES
AMERICA'S #1 HOME BUILDER
16520 SW Upper Boones Ferry Road, Suite 200
Portland, OR 97224
Phone: (503) 608-3060
Fax: (503) 608-3061

Rogerfield Phase II-52 Lots

CITY OF WEST LINN, OREGON
COMPOSITE GRADING PLAN

otak Incorporated
17355 SW Boones Ferry Road
Lake Oswego, OR 97035-5217
Phone: (503) 635-3618
FAX: (503) 635-5395

ASBUILT SUBMITTAL TO CITY OF WEST LINN 02-26-03

10822
Project No.
D822C14
File No.
C1.4
Sheet No.

Copyright 2002 ©

SHANNONW 02/25/03 4:22pm ---> R:\DWG\D822C14.DWG

XREF LIST
Ltscale: 1
Resolved
D822X005
D822x190
D822x230
D822x430
D822x600
D822XWHG
S822B194
Unresolved
S822B195

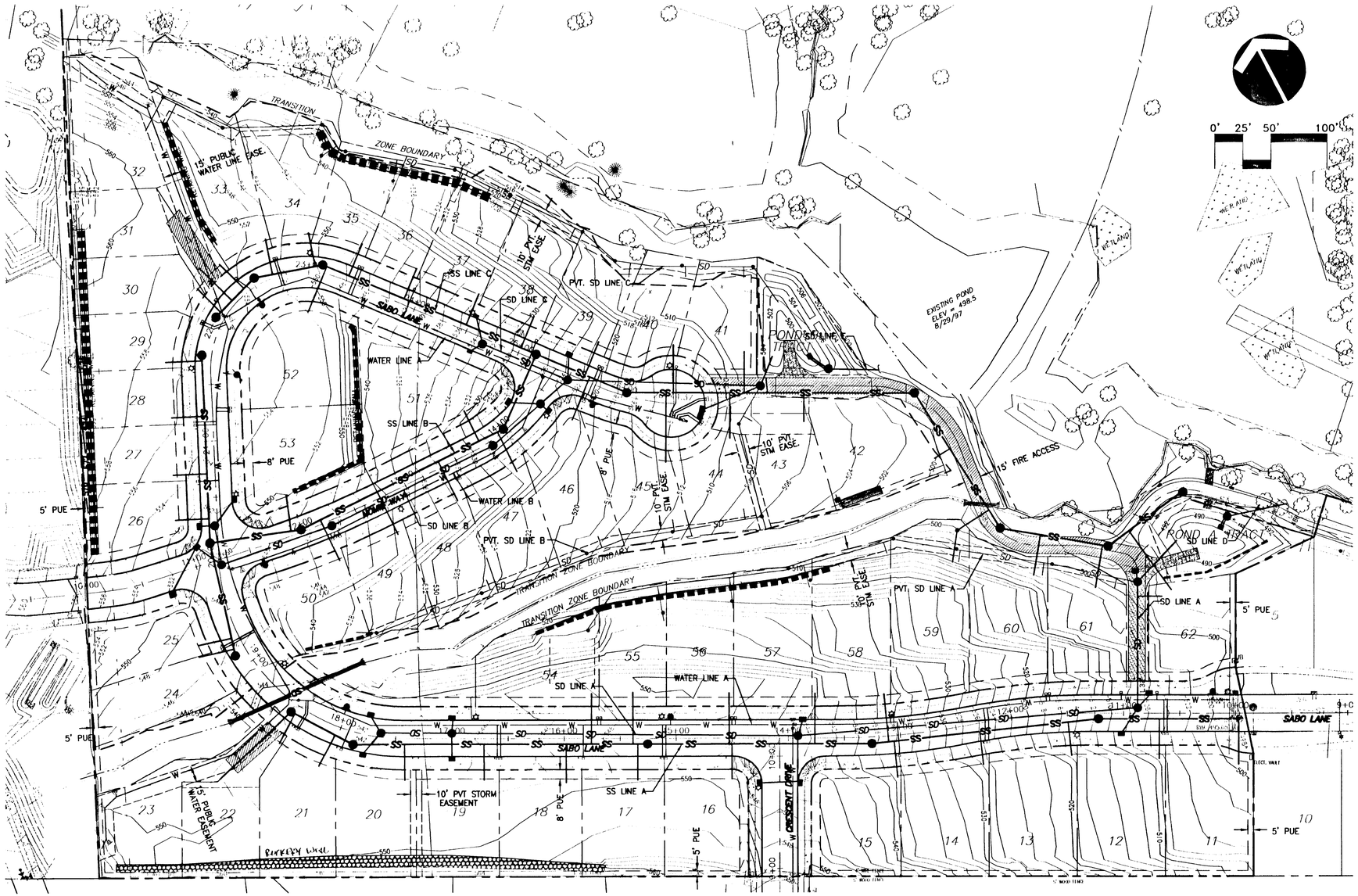

LEGEND

EXISTING		PROPOSED	
	WATER LINE		STORM SEWER LINE
	SANITARY SEWER LINE		STORM SEWER MANHOLE
	STORM SEWER LINE		STORM SEWER CURB INLET
	SANITARY SEWER MANHOLE		WATER MAIN LINE
	STORM DRAIN INLET		WATER BLOW-OFF ASSEMBLY
	GATE VALVE		AIR RELEASE VALVE
	FIRE HYDRANT		ROCKERY WALL

06/14/02
Date
SAS
Designed
KM, TR, SR
Drawn
Checked By Date

REGISTERED PROFESSIONAL ENGINEER
58,361
OREGON
JULY 11, 2000
SCOTT SHUMAKER
EXPIRES: 06/30/2004

"AS-BUILT"
DATE 2-26-03 BY SAS

CENTEX HOMES
AMERICA'S #1 HOMEBUILDER
16520 SW Upper Boones Ferry Road, Suite #200
Portland, OR 97224
Phone: (503) 608-3060
Fax: (503) 608-3061

Rogerfield Phase II-52 Lots

CITY OF WEST LINN, OREGON

COMPOSITE UTILITY PLAN

otak Incorporated
17355 SW Boones Ferry Road
Lake Oswego, OR 97035-5217
Phone: (503) 635-3618
FAX: (503) 635-5395

ASBUILT SUBMITTAL TO CITY OF WEST LINN 02-28-03

10822
Project No.
D822C15
File No.
C1.5
Sheet No.

Copyright 2'02 ©

SHANNONM 02/25/03 4:43pm ---> R:\DWG\D822C15.DWG

XREF LIST
Ltscale: 1
Resolved
D822X005
D822x190
D822x230
D822X600
D822XWRG

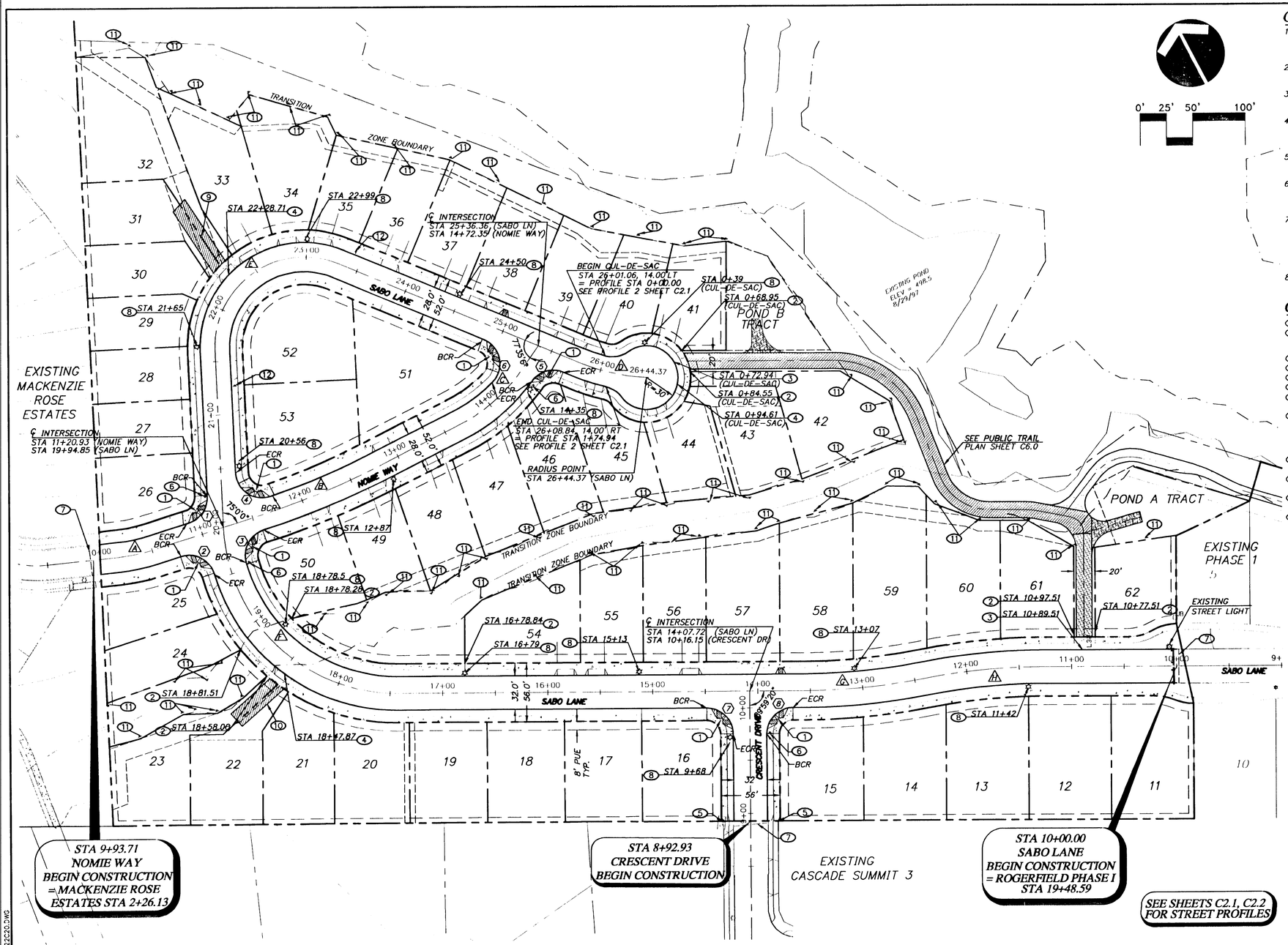

GENERAL NOTES

1. ALL WORK IN THE PUBLIC RIGHT-OF-WAY SHALL CONFORM TO CURRENT CITY OF WEST LINN STANDARD DRAWINGS AND SPECIFICATIONS.
2. EROSION CONTROL MUST BE INSTALLED AND MAINTAINED PER THE APPROVED EROSION CONTROL PLANS.
3. STATIONING IS FROM ROAD CENTERLINE UNLESS OTHERWISE NOTED.
4. ALL TREES WITHIN THE PUBLIC RIGHT-OF WAY SHALL BE REMOVED AND DISPOSED OF OFF-SITE AT A LEGAL DUMP SITE, UNLESS OTHERWISE NOTED.
5. CONSTRUCT ROADS PER DESIGNATED SECTION ON SHEET C1.2.
6. SIDEWALK BENCHES SHALL BE INCLUDED IN ALL STREET EXCAVATION OR EMBANKMENT UNLESS OTHERWISE SPECIFIED OR APPROVED BY ENGINEER.
7. PAVING WIDTHS AND NUMBER OF PANELS SHALL BE AS FOLLOWS WHEN PAVING WITH A.C.

STREET WIDTH	PANELS	PAVING WIDTH
28'	2	14'
32'	2	16'

8. EXACT LOCATION OF ADA RAMPS WILL BE AGREED UPON IN THE FIELD BETWEEN THE CITY INSPECTOR AND ENGINEER.

CONSTRUCTION KEYNOTES

1. CONSTRUCT WHEELCHAIR RAMP PER DETAIL WL-507B.
2. LIMIT OF SIDEWALK CONSTRUCTION AT THE TIME OF PUBLIC IMPROVEMENTS. OTHER SIDEWALKS TO BE CONSTRUCTED AT TIME OF BUILDING CONSTRUCTION.
3. CONSTRUCT 15' WIDE DRIVEWAY PER DETAIL WL-504.
4. CONSTRUCT 16' WIDE DRIVEWAY PER DETAIL WL-503.
5. TRANSITION TO MATCH EXISTING 5' WIDE SIDEWALK
6. STOP SIGN TO BE INSTALLED BY CITY OF WEST LINN.
7. SAWCUT EXISTING PAVEMENT MINIMUM 2' FROM EDGE AND MATCH EXISTING.
8. INSTALL STREET LIGHT, 30-FOOT, BRONZE, ROUND, DIRECT BURY, FIBERGLASS LIGHT POLE, WITH A 100W, 240V, HPS, "SHOEBOX" STYLE LUMINAIRE, MOUNTED ON AN 8-INCH MASTARM, 25-FEET ABOVE THE ROADWAY. TO MATCH ADJOINING SUBDIVISION (MACKENZIE ROSE).
9. CONSTRUCT ASPHALT DRIVEWAY (16' WIDE X 70' LONG), 3" AC ON 8" CRUSHED AGGREGATE.
10. CONSTRUCT ASPHALT DRIVEWAY (16' WIDE X 50' LONG), 3" AC ON 8" CRUSHED AGGREGATE.
11. INSTALL DRAINAGEWAY SIGN (AVAILABLE FROM CITY OF WEST LINN PLANNING DEPARTMENT).
12. INSTALL 15 MPH SPEED SIGN.

CURB RETURN CURVE DATA

CURVE	BCR STR. STA.	BCR OFFSET	ECR STR. STA.	ECR OFFSET	ALIGN.
1	20+24.78	14'L	10+91.00	14'L	SABO,NOM
2	10+74.34	14'R	19+54.62	16'L	NOM,SABO
3	19+56.59	16'R	11+56.44	14'R	SABO,NOM
4	11+72.50	14'L	20+45.80	14'R	NOM,SABO
5	14+41.94	14'R	25+67.64	14'R	NOM,SABO
6	24+85.74	14'R	14+16.21	14'L	SABO,NOM
7	14+48.72	16'L	09+75.15	16'L	SABO,CRES
8	09+75.14	16'R	13+66.72	16'L	CRES,SABO

CURB RETURN VERTICAL DATA

CURVE	TOP OF CURB ELEVATIONS BCR	1/4 PT.	1/2 PT.	3/4 PT.	ECR
1	551.47	551.14	550.99	551.04	552.32
2	552.21	551.33	550.06	548.80	547.96
3	548.06	548.48	548.73	548.75	548.51
4	547.84	548.76	550.16	551.57	552.53
5	524.46	524.15	523.40	522.41	521.38
6	531.09	529.22	527.08	525.47	525.19
7	548.04	547.39	546.43	545.59	545.30
8	545.30	545.02	544.49	543.76	542.92

CURB CURVE DATA

CURVE	LENGTH	RADIUS	DELTA
1	32.72'	25.00'	75°00'00"
2	39.72'	25.00'	91°01'50"
3	38.60'	25.00'	88°27'59"
4	46.27'	25.00'	106°02'34"
5	33.24'	25.00'	76°10'32"
6	49.20'	25.00'	112°45'35"
7	39.27'	25.00'	89°59'20"
8	39.27'	25.00'	90°00'00"

CL CURVE DATA

CURVE	LENGTH	RADIUS	DELTA
A	33.76'	165.00'	11°43'19"
B	117.14'	750.00'	8°56'55"
C	82.49'	165.00'	28°38'58"
D	68.03'	200.00'	19°29'26"
E	170.59'	85.00'	114°59'33"
F	252.37'	165.00'	87°38'08"
G	113.13'	600.00'	10°48'11"
H	114.25'	600.00'	10°54'36"

06/14/02
Date
SAS
Designed
KM, TR, SR
Drawn
Checked By Date

REGISTERED PROFESSIONAL ENGINEER
OREGON
JULY 11, 2000
SCOTT SHUMAKER
EXPIRES: 06/30/2004

AS-BUILT '99
DATE 2-24-03 BY SCS

CENTEX HOMES
A KAUFMAN & BROAD HOME
18520 SW Upper Boones Ferry Road, Suite #200
Portland, OR 97224
Phone: (503) 608-3060
Fax: (503) 608-3061

Rogerfield Phase II-52 Lots

CITY OF WEST LINN, OREGON
STREET PLAN - SABO DRIVE AND NOMIE WAY

otak Incorporated
17355 SW Boones Ferry Road
Lake Oswego, OR 97035-5217
Phone: (503) 635-3618
FAX: (503) 635-5395

ASBUILT SUBMITTAL TO CITY OF WEST LINN 02-28-03

10822
Project No.
D822C20
File No.
C2.0
Sheet No.

Copyright 2002 ©

L:\SHANNON\ 02/26/03 10:48am --> R:\DWG\D822C20.DWG

XREF LIST
Ltscale: 1
Resolved
D822X005
D822x230
D822x900

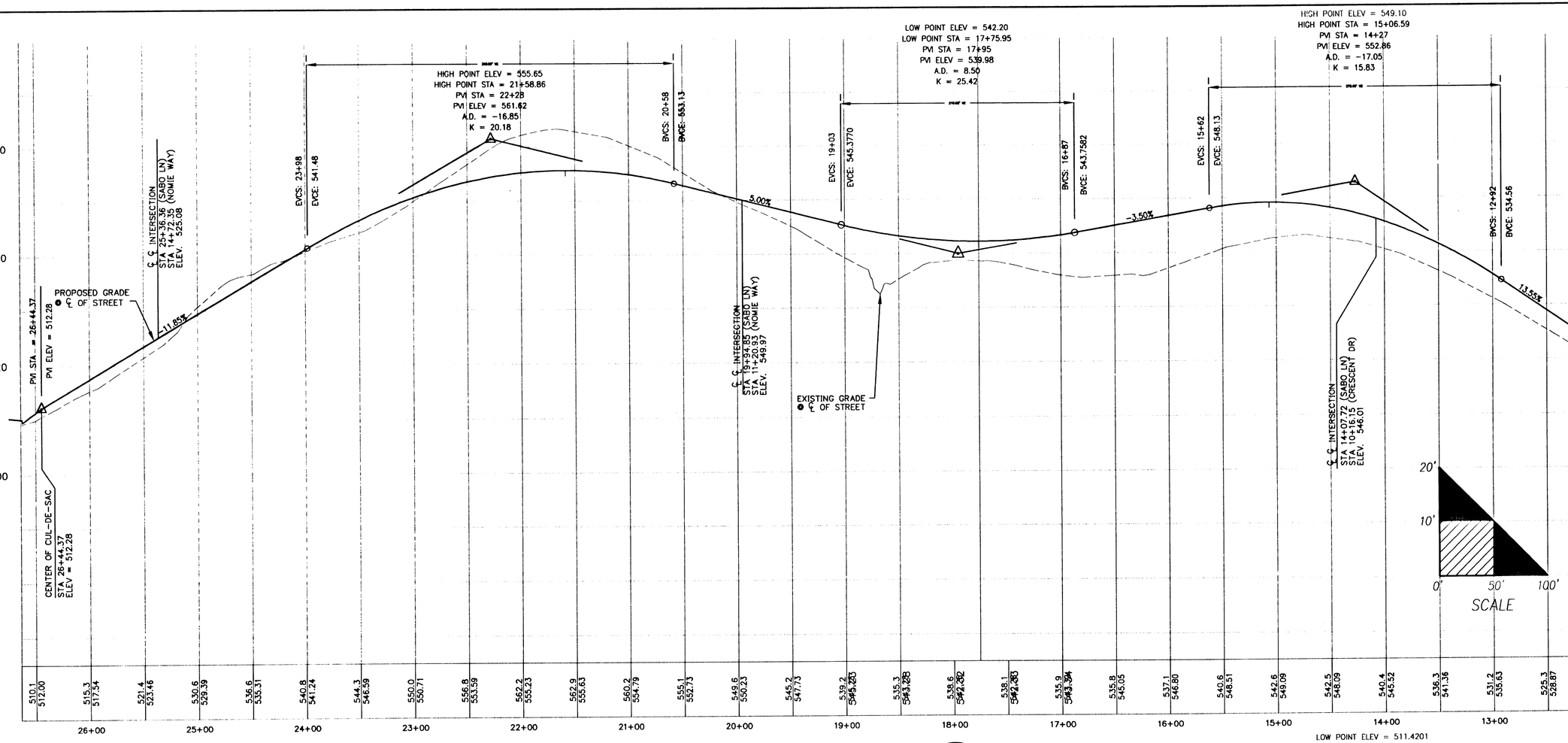

SABO LANE

1 / C2.1

SCALE: 1"=50' HORZ.
1"=10' VERT.

LOW POINT ELEV = 511.4201
LOW POINT STA = 0+94.40
PVI STA = 0+93.70
PVI ELEV = 506.7800
A.D. = 22.50
K = 7.33

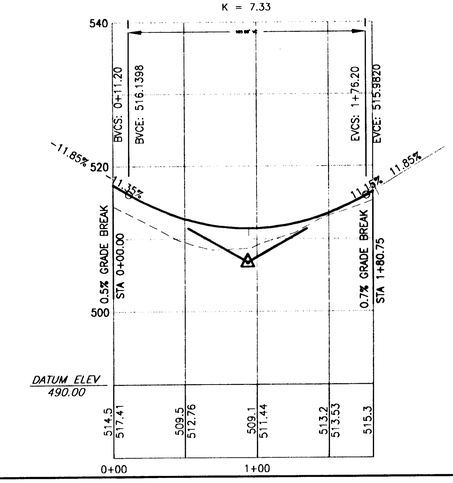

SABO LANE CUL-DE-SAC TOC

2 / C2.1

SCALE: 1"=50' HORZ.
1"=10' VERT.

MATCHLINE STA 12+25

SEE SHEET C2.2

ASBUILT SUBMITTAL TO CITY OF WEST LINN 02-28-03

06/14/02
Date
SAS
Designed
KM, TR, SR
Drawn
Checked By Date

REGISTERED PROFESSIONAL ENGINEER
SCOTT SHUMAKER
OREGON
JUL 11, 2003
EXPIRES: 06/30/2004

"AS-BUILT"
DATE 2-26-03 BY SAS

CENTEX HOMES
AMERICA'S #1 HOMEBUILDER
16520 SW Upper Boones Ferry Road, Suite #200
Portland, OR 97224
Phone: (503) 608-3060
Fax: (503) 608-3061

Rogerfield Phase II-52 Lots

CITY OF WEST LINN, OREGON
STREET PROFILE
SABO LANE – END TO STA 12+25

otak Incorporated
17355 SW Boones Ferry Road
Lake Oswego, OR 97035-5217
Phone: (503) 635-3618
FAX: (503) 635-5395

10822
Project No.
D822C21
File No.
C2.1
Sheet No.

Copyright 2002 ©

L:\SHANNON\ 12/25/03 5:03pm ---> R:\DWG\D822C21.DWG

XREF LIST
Liscale: 1
Resolved
D822X005
D822x230
D822x900

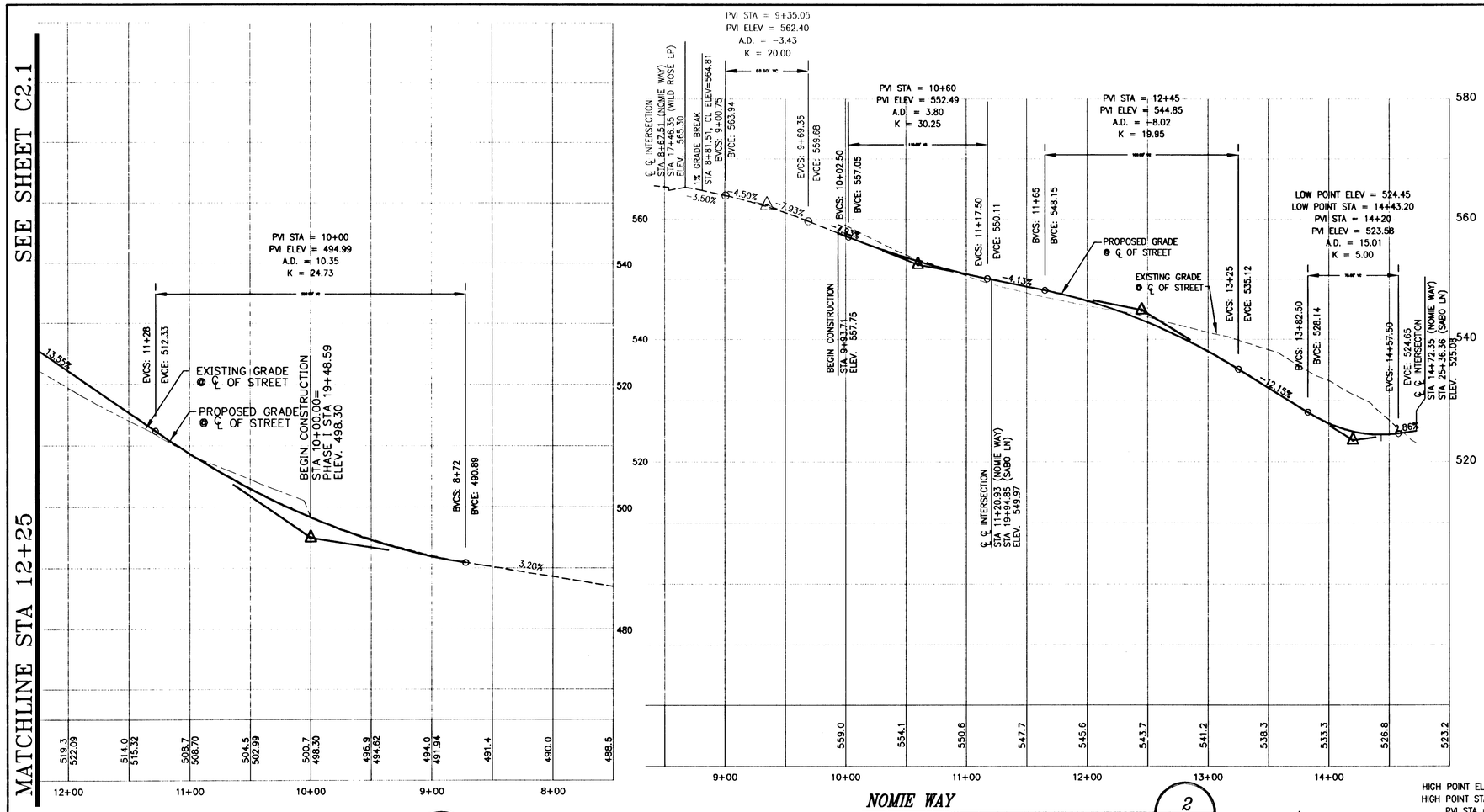

SABO LANE

SCALE: 1"=50' HORZ.
1"=10' VERT.

1 / C2.2

NOMIE WAY

SCALE: 1"=50' HORZ.
1"=10' VERT.

2 / C2.2

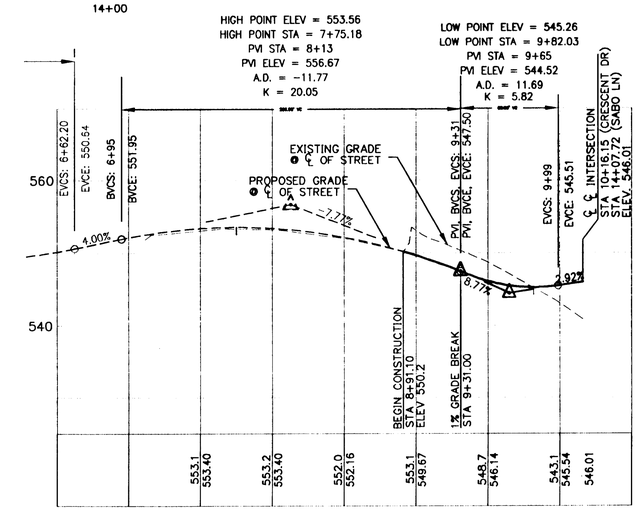

CRESCENT DRIVE

SCALE: 1"=50' HORZ.
1"=10' VERT.

3 / C2.2

ASBUILT SUBMITTAL TO CITY OF WEST LINN 02-28-03

06/14/02
Date
SAS
Designed
KM, TR, SR
Drawn
Checked By Date

REGISTERED PROFESSIONAL ENGINEER 90398 OREGON JULY 11, 2000 SCOTT STUMPER

EXPIRES: 06/30/2004

"AS-BUILT"
DATE 2-26-03 BY SAS

CENTEX HOMES
AMERICA'S #1 HOMEBUILDER
16520 SW Upper Boones Ferry Road, Suite #200
Portland, OR 97224
Phone: (503) 608-3060
Fax: (503) 608-3061

Rogerfield Phase II-52 Lots

CITY OF WEST LINN, OREGON
STREET PROFILE
SABO DRIVE STA 12+25 TO STA 8+00,
NOMIE WAY AND CRESCENT DRIVE

otak Incorporated
17355 SW Boones Ferry Road
Lake Oswego, OR 97035-5217
Phone: (503) 635-3618
FAX: (503) 635-5395

10822
Project No.
D822C22
File No.
C2.2
Sheet No.

Copyright 2002 ©

L:\SHANNON\ 02/25/03 5:05am --> R:\DWG\D822C22.DWG

XREF LIST
Ltscale: 1
Resolved
D822X005
D822x190
D822x230
D822x430
D822x600
D822XWRG
Unresolved
S822B195

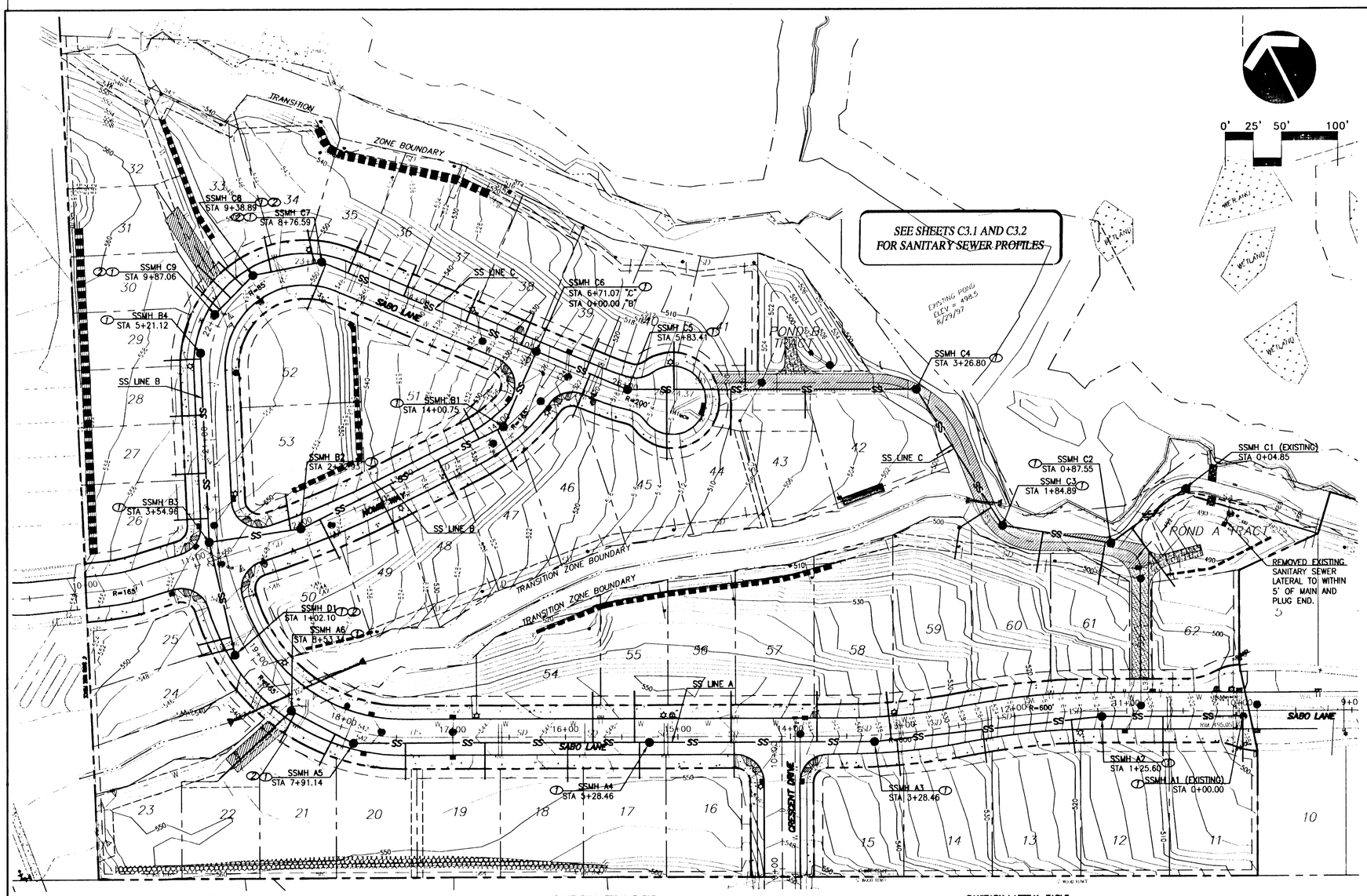

0' 25' 50' 100'

LEGEND

EXISTING

- WATER LINE
- SANITARY SEWER LINE
- STORM SEWER LINE
- SANITARY SEWER MANHOLE
- STORM DRAIN INLET
- GATE VALVE
- FIRE HYDRANT

PROPOSED

- STORM SEWER LINE
- STORM SEWER MANHOLE
- STORM SEWER CURB INLET
- WATER MAIN LINE
- WATER BLOW-OFF ASSEMBLY
- AIR RELEASE VALVE
- ROCKERY WALL

CONSTRUCTION NOTES

1. CONSTRUCT SANITARY SEWER MANHOLE PER CITY OF WEST LINN DETAIL #207
2. ROTATE MANHOLE CONE AWAY FROM CURB FACE
3. CONSTRUCT DESIGNATED SIZE SANITARY SEWER PIPE, CLASS B BACKFILL, OR AS DESIGNATED ON PROFILE

SANITARY LATERAL TABLE

LOT #	SAN. STA	SAN. LINE	LENGTH (LF)	IE @ MAIN	IE @ END	DEPTH (F.G. TO IE END)
11 (EXISTING)	0+00.00	A	40.44	486.50	493.67	6.70
12*	0+70.93	A	32.86	495.61	499.6	7.3
13*	1+52.75	A	29.70	504.40	506.9	10.3
14*	2+31.68	A	29.47	514.42	519.3	8.5
15*	3+10.69	A	32.10	523.26	530.7	6.6
16*	4+53.81	A	32.00	530.44	538.3	10.5
17*	5+37.38	A	32.00	533.86	541.6	8.0
18*	6+00.70	A	32.00	534.38	539.8	8.9
19*	6+74.61	A	32.00	534.97	538.5	7.4
20**	7+45.06	A	32.00	535.54	536.6	7.0
21**	8+09.98	A	28.67	536.23	536.9	6.5
22**	8+48.35	A	28.67	536.44	537.6	6.5
23**	8+53.34	A	30.54	536.50	538.1	8.4
24**	0+85.35	D	31.6	537.58	542.2	5.5
25*	0+97.18	D	29.8	537.64	542.7	5.9
26*	3+76.15	B	29.70	538.18	548.0	7.0
27*	4+16.78	B	30.0	540.57	546.9	8.0
28*	4+67.13	B	29.3	543.52	547.1	8.5

SANITARY LATERAL TABLE

LOT #	SAN. STA	SAN. LINE	LENGTH (LF)	IE @ MAIN	IE @ END	DEPTH (F.G. TO IE END)
29*	5+16.12	B	32.4	546.39	551.3	6.3
30*	9+81.59	C	29.1	541.82	548.5	7.1
31*	9+66.02	C	41.3	541.37	546.8	10.0
32**	9+50.79	C	30.6	540.93	542.8	12.0
33**	9+22.24	C	32.4	539.48	540.6	12.0
34**	8+83.57	C	30.6	537.37	538.4	12.2
35**	8+49.60	C	30.8	533.80	535.0	12.9
36**	7+99.60	C	29.1	527.91	550.3	12.6
37**	7+39.60	C	29.6	520.84	521.4	14.7
38**	6+84.58	C	30.2	514.36	515.7	14.4
39**	6+22.40	C	31.4	506.63	508.4	13.8
40**	5+41.55	C	41.9	500.17	502.4	11.6
41**	4+78.79	C	36.1	497.64	497.9	9.8
42*	2+70.41	C	16.1	490.80	494.3	6.2
43*	4+27.04	C	25.0	495.55	500.0	7.3
44**	4+91.64	C	40.0	498.16	500.2	9.1
45**	5+49.37	C	61.4	500.49	503.1	9.9
46**	6+19.81	C	40.9	506.51	508.31	***

SANITARY LATERAL TABLE

LOT #	SAN. STA	SAN. LINE	LENGTH (LF)	IE @ MAIN	IE @ END	DEPTH (F.G. TO IE END)
47**	0+77.65	B	39.2	513.92	516.8	11.3
48**	1+33.63	B	39.1	519.44	520.9	13.2
49**	1+94.18	B	41.9	525.41	527.0	13.3
50**	2+54.43	B	39.4	531.35	533.2	11.2
51*	0+97.30	B	29.8	515.85	524.1	8.0
52*	8+71.59	C	43.3	536.03	544.1	8.0
53*	2+81.33	B	32.4	533.73	541.7	8.0
54**	5+79.99	A	44.2	534.21	536.05	***
55**	5+41.43	A	45.1	533.90	535.74	***
56**	4+56.92	A	44.7	530.73	532.57	***
57**	3+84.93	A	44.6	527.85	529.69	***
58**	3+13.41	A	42.0	523.58	525.42	***
59*	2+03.86	C	61.17	490.43	496.5	7.1
60*	1+49.20	C	34.01	488.83	494.3	7.8
61*	0+92.55	C	35.49	486.61	493.0	6.2
62*	0+65.68	C	61.39	485.52	488.5	6.4

* CONSTRUCT PER DETAIL WL-218 (SCHEME 1)
** CONSTRUCT PER DETAIL WL-218 (SCHEME 2)
*** NOTE: LATERAL MARKER BOARD BROKEN OR NOT-STANDARD LENGTH, IE @ END PER DESIGN.

ASBUILT SUBMITTAL TO CITY OF WEST LINN 02-26-03

06/14/02
Date
SAS
Designed
KM, TR, SR
Drawn
Checked By Date

REGISTERED PROFESSIONAL ENGINEER 54,361 OREGON JULY 11, 2000 SCOTT SHUMAKER
EXPIRES: 06/30/2004

AS-BUILT
DATE 2-26-03 BY SAS

CENTEX HOMES
AMERICA'S #1 HOMEBUILDER
16320 SW Upper Boones Ferry Road, Suite #200
Portland, OR 97224
Phone: (503) 608-3060
Fax: (503) 608-3061

Rogerfield Phase II-52 Lots

CITY OF WEST LINN, OREGON
SANITARY SEWER PLAN

otak Incorporated
17355 SW Boones Ferry Road
Lake Oswego, OR 97035-5217
Phone: (503) 635-3618
FAX: (503) 635-5395

10822
Project No.
D822C30
File No.
C3.0
Sheet No.

Copyright 2002 ©

J:\SANSEW 02/26/03 10:37am --> R:\DWG\D822C30.DWG

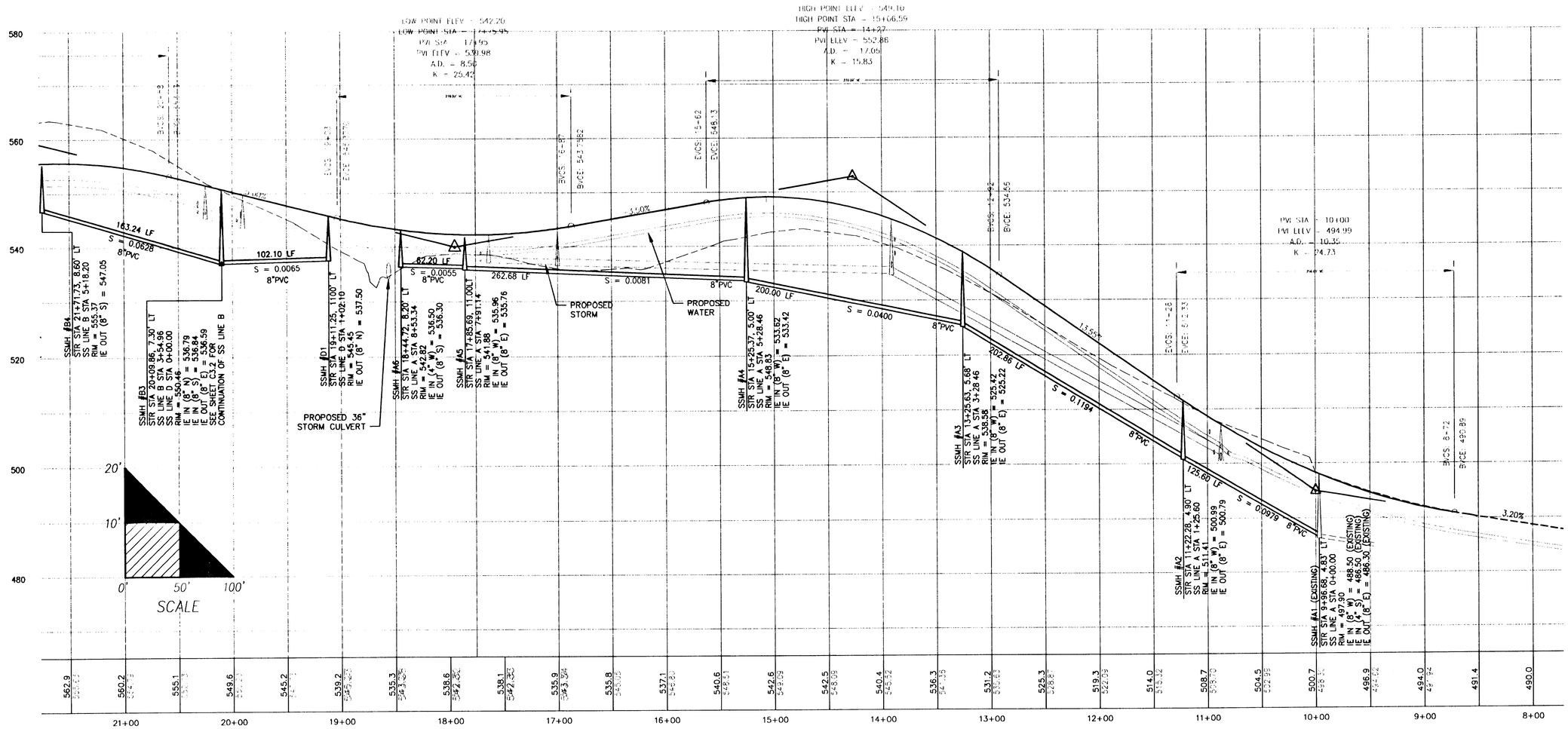

SABO LANE SS LINE A AND B

SCALE: 1"=50' HORZ.
1"=10' VERT.

1
C3.1

06/14/02
Date
SAS
Designed
KM, TR, SR
Drawn
Checked By Date

REGISTERED PROFESSIONAL ENGINEER
OREGON
JULY 1, 2003
SCOTT SHUMAKER

EXPIRES: 06/30/2004

"AS-BUILT"
DATE 2-28-03 BY SAS

CENTEX HOMES
AMERICA'S #1 HOME BUILDER
16520 SW Upper Boones Ferry Road, Suite #200
Portland, OR 97224
Phone: (503) 608-3060
Fax: (503) 608-3061

Rogerfield Phase II-52 Lots

CITY OF WEST LINN, OREGON
SANITARY SEWER PROFILE
SABO LANE SANITARY LINES A AND B

ASBUILT SUBMITTAL TO CITY OF WEST LINN 02-28-03

otak
Incorporated
17355 SW Boones Ferry Road
Lake Oswego, OR 97035-5217
Phone: (503) 635-3618
FAX: (503) 635-5395

10822
Project No.
D822C31
File No.
C3.1
Sheet No.

Copyright 2002 ©

XREF LIST
Litscale: 1
Resolved
D822X005
D822x230
D822x900

L: SHANNON\W 02/25/03 5:55pm --> R:\SWG\D822C31.SWG

XREF LIST
Ltscale: 1
Resolved
D822x005
D822x230
D822x900

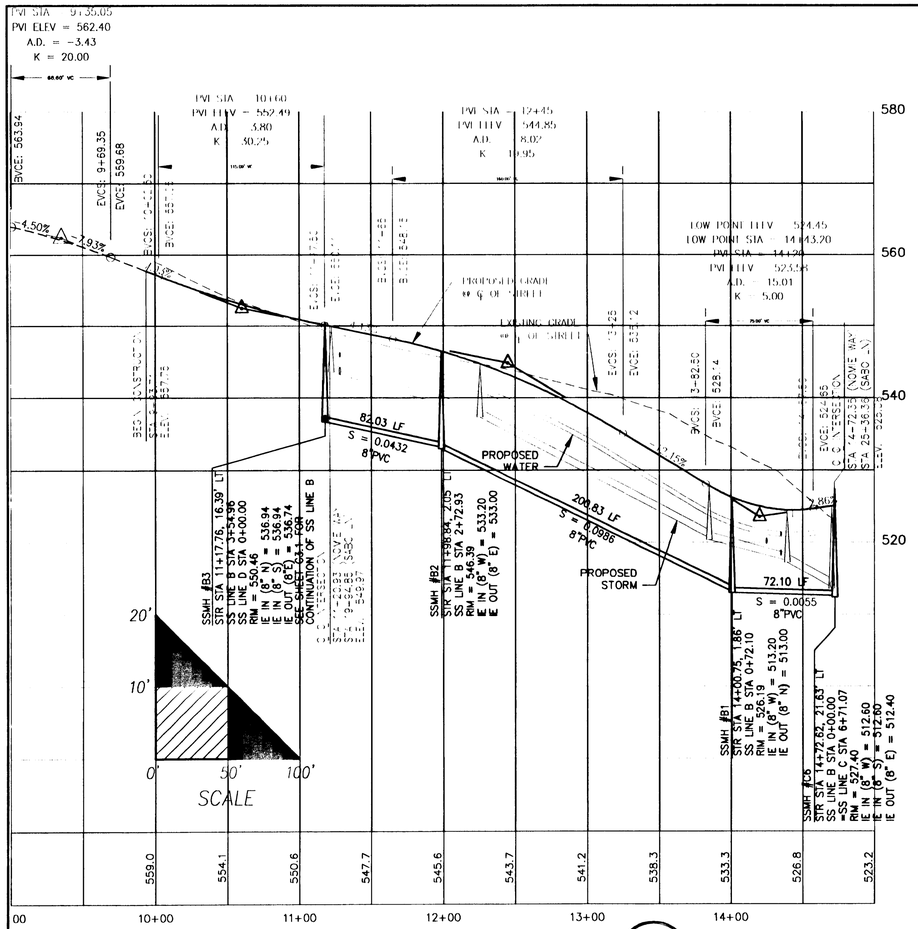

NOMIE WAY SS LINE B

1 / C3.2

SCALE: 1"=50' HORZ.
1"=10' VERT.

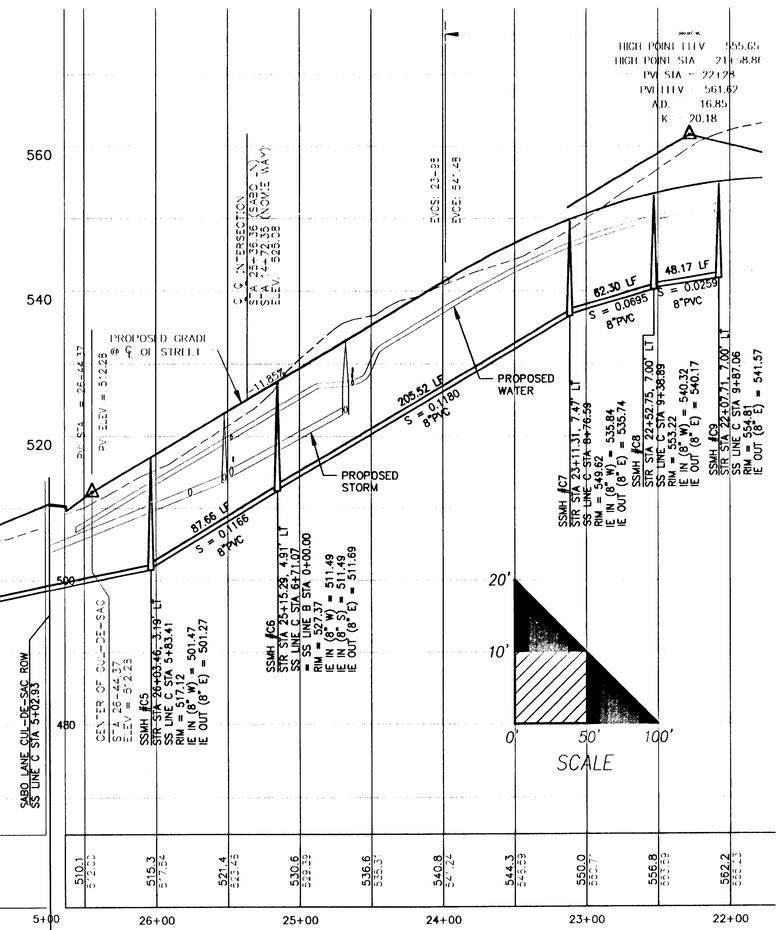

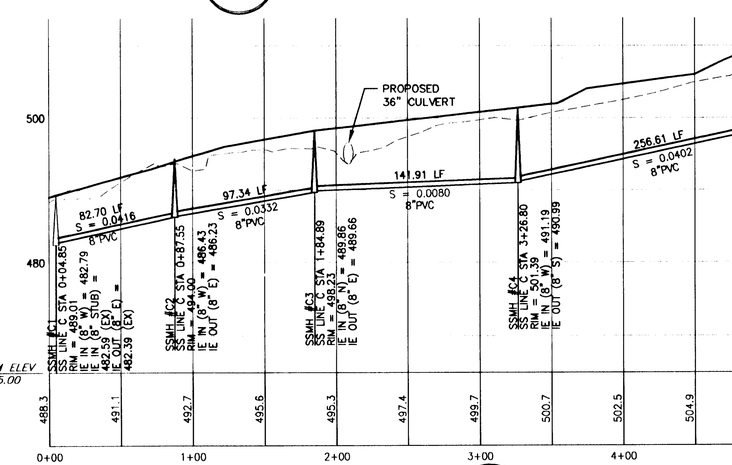

SS LINE C PROFILE

3 / C3.2

SCALE: 1"=50' HORZ.
1"=10' VERT.

SS LINE C STATIONING ← → STREET STATIONING

SABO LANE SS LINE C

2 / C3.2

SCALE: 1"=50' HORZ.
1"=10' VERT.

ASBUILT SUBMITTAL TO CITY OF WEST LINN 02-28-03

06/14/02
Date
SAS
Designed
KM, TR, SR
Drawn
Checked By Date

REGISTERED PROFESSIONAL ENGINEER
58,369
OREGON
JULY 11, 2000
SCOTT SHANNON

EXPIRES: 06/30/2004

AS-BUILT
DATE 2/25/03 BY SCS

CENTEX HOMES
AMERICA'S #1 HOME BUILDER
16520 SW Upper Boones Ferry Road, Suite #200
Portland, OR 97224
Phone: (503) 608-3060
Fax: (503) 608-3061

Rogerfield Phase II-52 Lots

CITY OF WEST LINN, OREGON
SANITARY SEWER PROFILES
NOMIE DRIVE SANITARY SEWER LINE B
SANITARY SEWER LINE C

otak Incorporated
17355 SW Boones Ferry Road
Lake Oswego, OR 97035-5217
Phone: (503) 635-3618
FAX: (503) 635-5395

10822
Project No.
D822C32
File No.
C3.2
Sheet No.

Copyright 2002 ©

J:\SHANNON\W 02/25/03 5:58pm --> R:\JWG\D822C32.DWG

XREF LIST
Llscale: 1
Resolved
D822X005
D822x190
D822x230
D822x430
D822x600
S822B194
Unresolved
S822B195

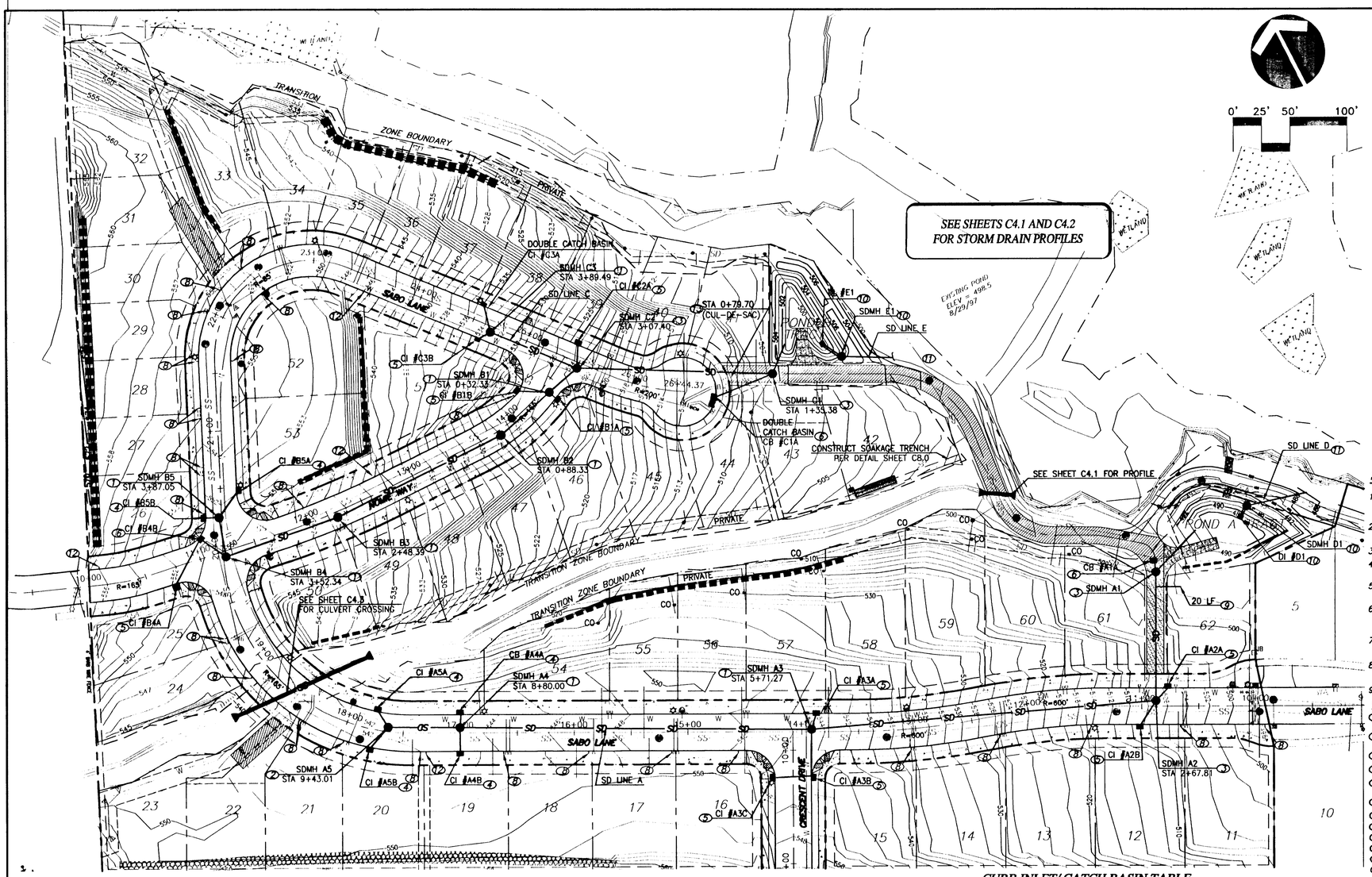

0' 25' 50' 100'

LEGEND

EXISTING

- WATER LINE
- SANITARY SEWER LINE
- STORM SEWER LINE
- SANITARY SEWER MANHOLE
- STORM DRAIN INLET
- GATE VALVE
- FIRE HYDRANT

PROPOSED

- STORM SEWER LINE
- STORM SEWER MANHOLE
- STORM SEWER CURB INLET
- WATER MAIN LINE
- WATER BLOW-OFF ASSEMBLY
- AIR RELEASE VALVE
- ROCKERY WALL

STORM DRAIN NOTES

1. ALL WORK IN THE PUBLIC RIGHT-OF-WAY AND CITY UTILITY EASEMENTS SHALL CONFORM TO THE CURRENT CITY OF WEST LINN STANDARD DRAWINGS AND SPECIFICATIONS.
2. EROSION CONTROL MUST BE INSTALLED AND MAINTAINED PER THE APPROVED EROSION CONTROL PLANS.
3. STATIONING IS FROM STREET CENTERLINE UNLESS OTHERWISE NOTED.
4. ONCE CURB INLET IS INSTALLED, SILT SAK INSERT SHOULD BE INSTALLED AT ONCE.
5. CONSTRUCT DESIGNATED SIZE STORM DRAIN PER CITY OF WEST LINN STANDARDS. USE CLASS B BACKFILL, OR AS DESIGNATED ON PROFILE.
6. MANHOLE RIM ELEVATIONS SHOWN ARE APPROXIMATE AND FOR INFORMATION ONLY. FINAL ELEVATIONS SHALL BE SET TO MATCH CONSTRUCTED FINISH GRADE.
7. LOTS 11-31, 51-53 TO BE SERVED BY A 3" WEEPHOLE THROUGH THE CURB ON THE LOW SIDE OF THE LOT, (SEE DETAIL WL-501).
8. LOTS 32-50, 54-61 TO BE SERVED BY A PRIVATE STORM SYSTEM AS SHOWN ON SHEETS C4.6-C4.7.
9. LOT 62 TO BE SERVED BY A PUBLIC STORM LATERAL.

CONSTRUCTION NOTES

1. CONSTRUCT STORM DRAIN MANHOLE PER CITY OF WEST LINN DETAIL #207
2. CONSTRUCT STORM DRAIN SHALLOW MANHOLE PER CITY OF WEST LINN DETAIL #208
3. CONSTRUCT POLLUTION CONTROL MH PER WEST LINN DETAIL #607
4. CONSTRUCT GUTTER INLET PER CITY OF WEST LINN DETAIL #600.
5. CONSTRUCT COMBINATION CURB INLET PER CITY OF WEST LINN DETAIL #601
6. CONSTRUCT CATCH BASIN PER CITY OF WEST LINN DETAIL #602
7. CONSTRUCT DITCH INLET PER CITY OF WEST LINN DETAIL #603
8. CONSTRUCT WEEPHOLE FOR LOT SERVICE.
9. CONSTRUCT 6" STORM LATERAL AT 2% SLOPE.
10. SEE SHEETS C4.4 AND C4.5 FOR POND CONTROL STRUCTURE DETAILS.
11. POND OUTFALL PER DETAIL WL-613 AND WL-614.
12. CONSTRUCT WEEPHOLE FOR WALL DRAIN.

CURB INLET/ CATCH BASIN TABLE

CI/CB #	ALIGN.	STR. STA.	OFFSET TO F.O.C.	T.O.C. ELEV.	I.E. OUT	PIPE DIA.	PIPE LENGTH	PIPE SLOPE
A1A	---	---	---	495.75*	493.03	10"	10 LF	0.329
A2A	SABO	10+74.75	16' RT	505.69	500.73	10"	16 LF	0.0175
A2B	SABO	11+01.84	16' LT	508.93	504.47	10"	25 LF	0.1608
A3A	SABO	13+85.75	16' RT	544.49	539.87	10"	16 LF	0.3237
A3B	CRESCENT	9+76.40	16' RT	545.29	540.07	12"	42 LF	0.1281
A3C	CRESCENT	9+76.40	16' LT	545.29	540.89	10"	34 LF	0.0182
A4A	SABO	17+00.09	16' RT	543.32	537.84	10"	12 LF	0.1092
A4B	SABO	17+00.09	16' LT	543.32	539.54	10"	21 LF	0.1433
A5A	SABO	17+75.95	16' RT	542.20	537.17	10"	17 LF	0.0076
A5B	SABO	17+75.95	16' LT	542.20	537.27	10"	25 LF	0.0084
B1A	NOMIE	14+39.53	14' RT	524.47	517.76	10"	9 LF	0.064
B1B	NOMIE	14+20.64	14' LT	524.96	519.72	10"	29 LF	0.082
B4A	NOMIE	10+71.73	14' RT	552.35	547.57	10"	46 LF	0.020
B4B	NOMIE	11+04.41	14' LT	550.98*	546.70	12"	30 LF	0.092
B5A	SABO	20+48.41	14' RT	552.65	545.86	10"	28 LF	0.022
B5B	SABO	20+24.78	14' LT	551.46	546.79	10"	13 LF	0.122
C1A	CUL D SAC	0+93.71	0' LT/RT	509.65*	505.22	10"	55 LF	0.083
	CUL D SAC	0+96.80	0' LT/RT	509.65*	505.90	10"	6 LF	0.008
C2A	SABO	25+41.81	14' LT	524.44	517.79	10"	23 LF	0.196
C3A	SABO	24+59.53	14' LT	533.99	529.40	10"	23 LF	0.159
	SABO	24+54.31	14' LT	534.40	529.80	10"	5 LF	0.053
C3B	SABO	24+57.76	14' RT	534.40	527.44	10"	14 LF	0.086

* CATCH BASIN RIM ELEVATION
** SEE DETAIL 1/C4.0 THIS SHEET

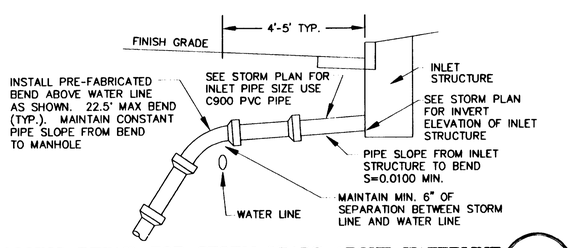

CROSSING DETAIL FOR STORM LEADS ABOVE WATERLINE

1 / C4.0

SCALE: N.I.S.

ASBUILT SUBMITTAL TO CITY OF WEST LINN 02-28-03

06/14/02
Date
SAS
Designed
KM, TR, SR
Drawn
Checked By Date

REGISTERED PROFESSIONAL ENGINEER — OREGON — JULY 11, 1989 — SCOTT SHUMAKER
EXPIRES: 06/30/2004

AS-BUILT
DATE 2-26-03 BY SCS

CENTEX HOMES
AMERICA'S #1 HOMEBUILDER
16520 SW Upper Boones Ferry Road, Suite #200
Portland, OR 97224
Phone: (503) 608-3060
Fax: (503) 608-3061

Rogerfield Phase II-52 Lots

CITY OF WEST LINN, OREGON
STORM DRAIN PLAN

otak Incorporated
17355 SW Boones Ferry Road
Lake Oswego, OR 97035-5217
Phone: (503) 635-3618
FAX: (503) 635-5395

10822
Project No.
D822C40
File No.
C4.0
Sheet No.

Copyright 2002 ©

:: SHANNONW 02/26/03 11:56am --> R:\DWG\D822C40.DWG

XREF LIST
Ltscale: 1
Resolved
D822X005
D822x230
D822x900
D822x901

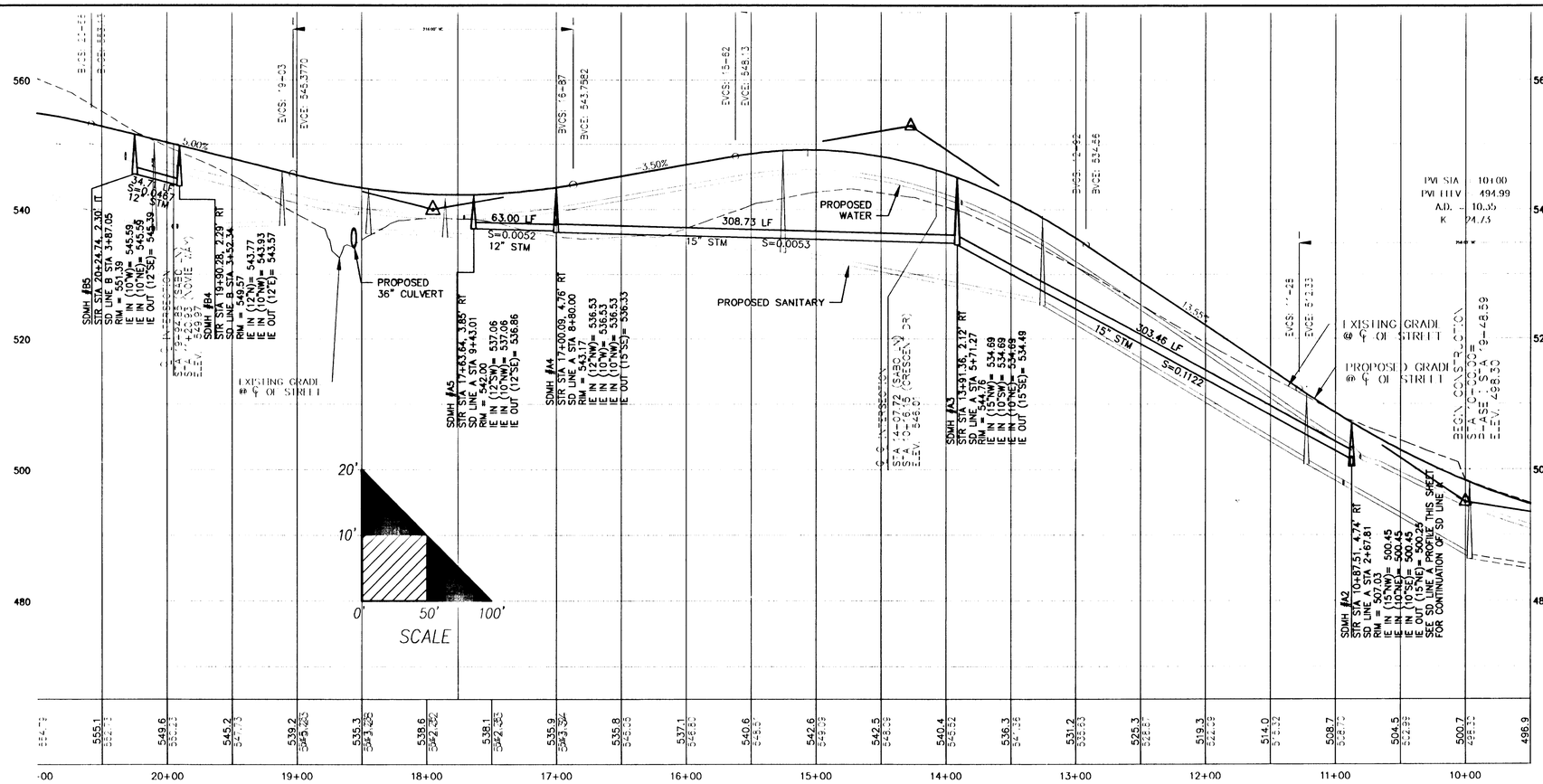

SABO LANE STORM LINE A & B

1 / C4.1

SCALE: 1"=50' HORZ.
1"=10' VERT.

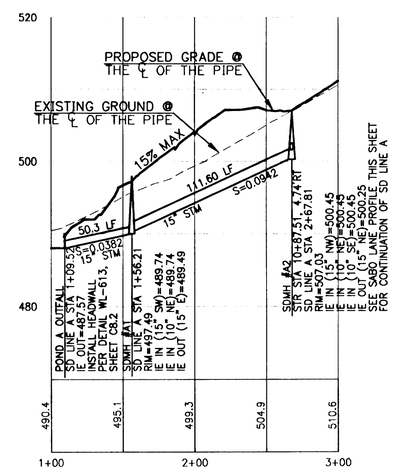

STORM DRAIN LINE A

2 / C4.1

SCALE: 1"=50' HORZ.
1"=10' VERT.

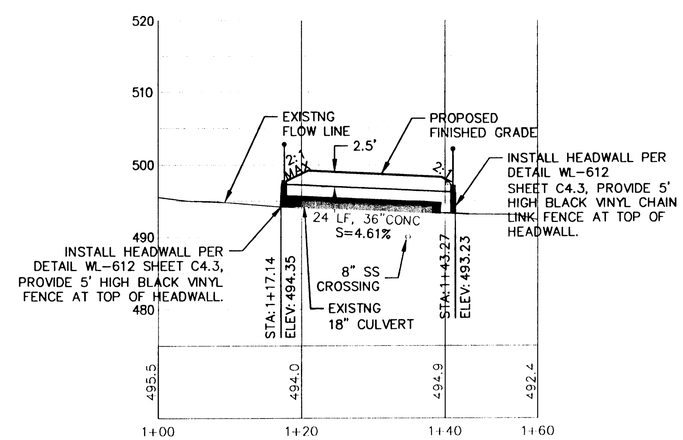

TRAIL CULVERT CROSSING

3 / C4.1

SCALE: 1"=10' HORZ.
1"=10' VERT.

ASBUILT SUBMITTAL TO CITY OF WEST LINN 02-28-03

06/14/02
Date
SAS
Designed
KM, TR, SR
Drawn
Checked By Date

REGISTERED PROFESSIONAL ENGINEER 58,361 OREGON JUNE 11, 2002 SCOTT SHUMAKER
EXPIRES: 06/30/2004

"AS-BUILT"
DATE 2-26-03 BY SAS

CENTEX HOMES
AMERICAN STANDARD HOMEBUILDER
16520 SW Upper Boones Ferry Road, Suite #200
Portland, OR 97224
Phone: (503) 608-3060
Fax: (503) 608-3061

Rogerfield Phase II-52 Lots

CITY OF WEST LINN, OREGON
STORM DRAIN LINE A PROFILES

otak Incorporated
17355 SW Boones Ferry Road
Lake Oswego, OR 97035-5217
Phone: (503) 635-3618
FAX: (503) 635-5395

10822
Project No.
D822C41
File No.
C4.1
Sheet No.

Copyright 2002 ©

SHANNONW 02/25/03 7:06am --> R:\DWG\D822C41.DWG

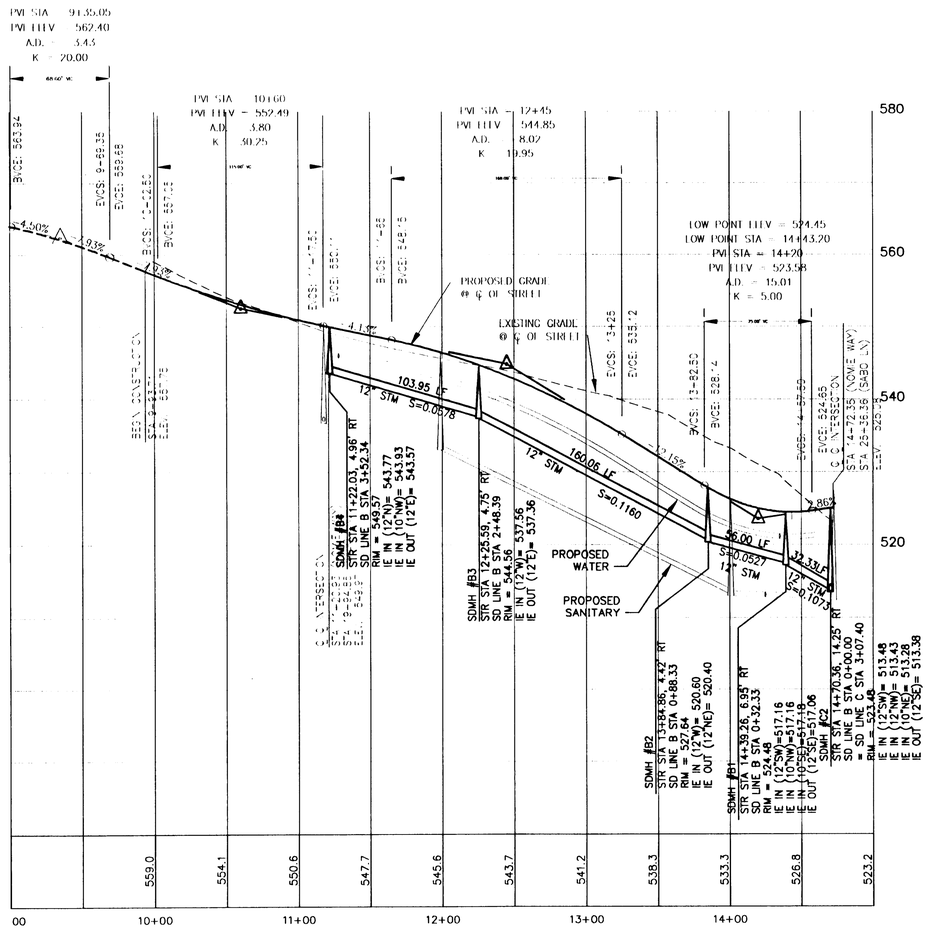

NOMIE WAY STORM DRAIN LINE B

1 / C4.2

SCALE: 1"=50' HORZ.
1"=10' VERT.

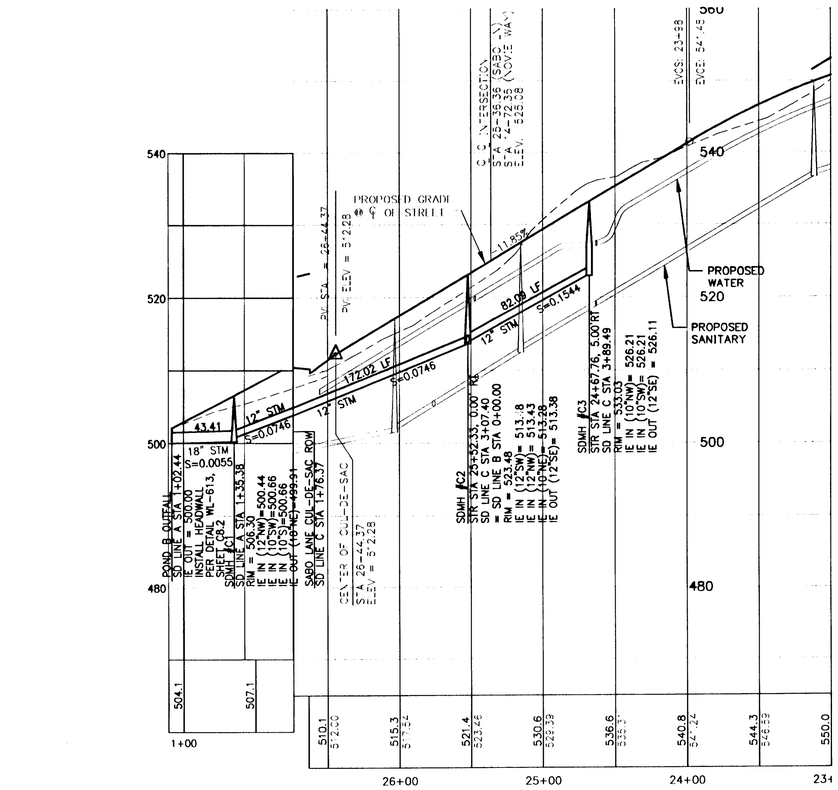

STORM DRAIN LINE C STATIONING ⟷ SABO LANE STATIONING

STORM DRAIN LINE C

2 / C4.2

SCALE: 1"=50' HORZ.
1"=10' VERT.

SABO LANE STORM DRAIN LINE C

3 / C4.2

SCALE: 1"=50' HORZ.
1"=10' VERT.

XREF LIST
Ltscale: 1
Resolved
D822X005
D822x230
D822x900

06/14/02
Date
SAS
Designed
KM, TR, SR
Drawn
Checked By Date

REGISTERED PROFESSIONAL ENGINEER
58,361
OREGON
MAY 17, 2002
SCOTT SHUMAKER
EXPIRES: 06/30/2004

"AS-BUILT"
DATE 2-26-03 BY SAS

CENTEX HOMES
AMERICA'S #1 HOMEBUILDER
16520 SW Upper Boones Ferry Road, Suite 200
Portland, OR 97224
Phone: (503) 608-3060
Fax: (503) 608-3061

Rogerfield Phase II-52 Lots

CITY OF WEST LINN, OREGON
STORM DRAIN PROFILE
STORM DRAIN LINE B AND LINE C

otak Incorporated
17355 SW Boones Ferry Road
Lake Oswego, OR 97035-5217
Phone: (503) 635-3618
FAX: (503) 635-5395

10822
Project No.
D822C42
File No.
C4.2
Sheet No.

Copyright 2002 ©

ASBUILT SUBMITTAL TO CITY OF WEST LINN 02-28-03

L: SHANNON\W 02/25/03 7:15am ---> R:\DWG\D822C42.DWG

XREF LIST
Lscale: 1
Resolved
D822x005
D822x190
D822x230
D822x430
D822x600
D822x001
D822B194
Unresolved
D822x400

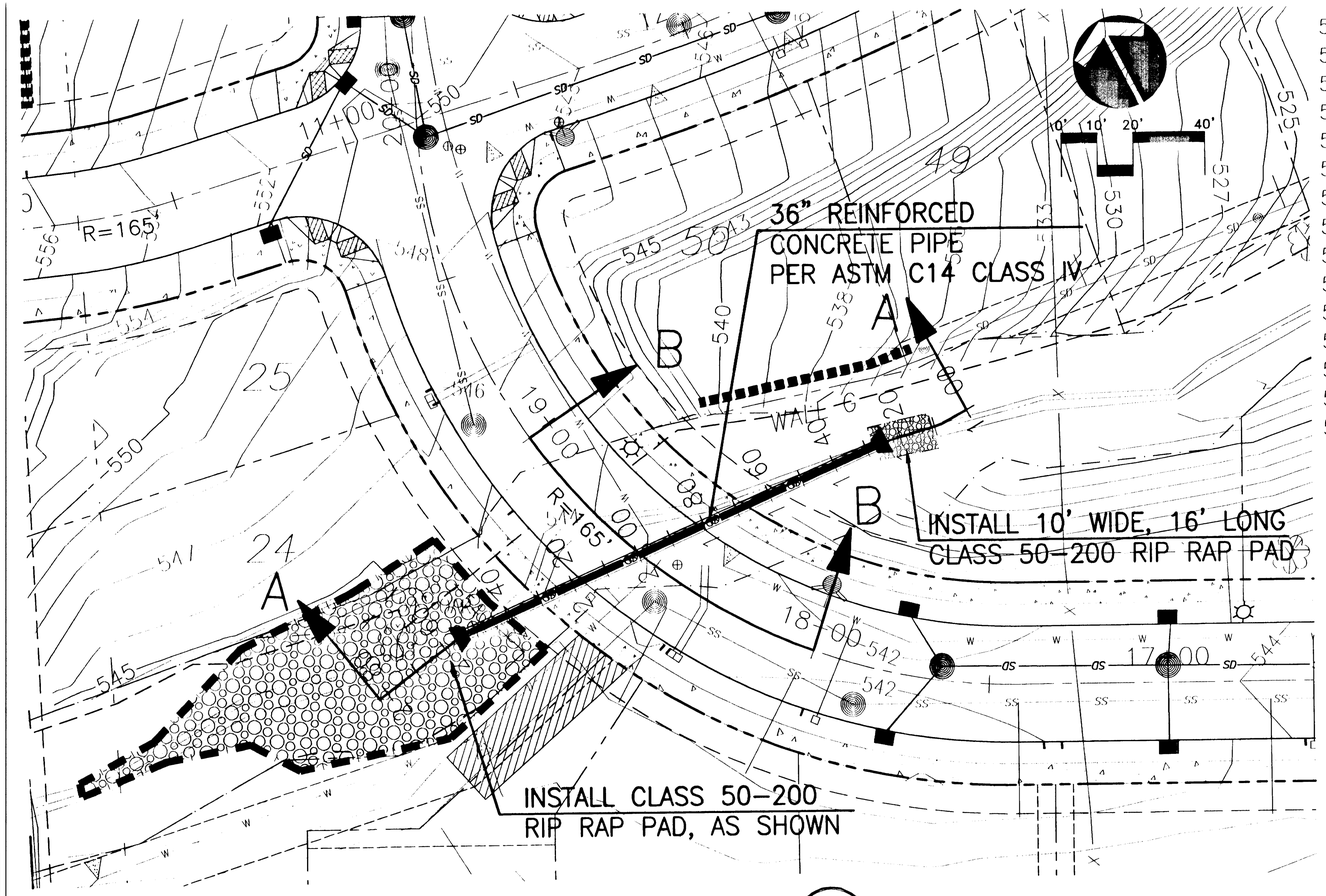

SABO DRIVE STREAM CROSSING PLAN

1 / C4.3

SCALE: 1"=20' HORZ.

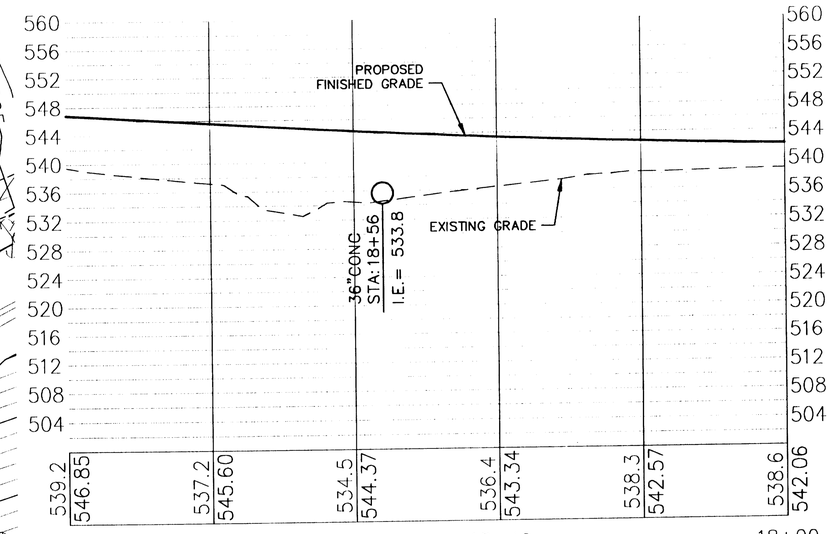

SECTION B-B

3 / C4.3

SCALE: 1"=10' HORZ.
1"=10' VERT.

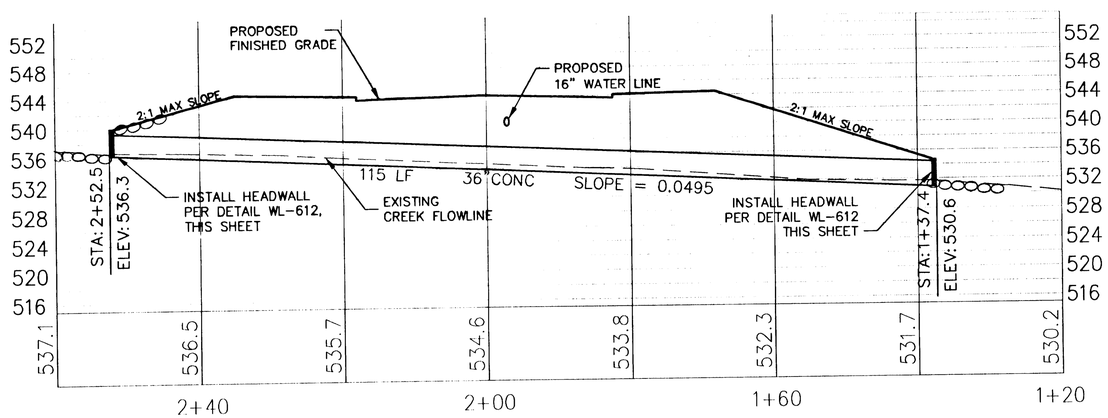

SECTION A-A

2 / C4.3

SCALE: 1" 10' HORZ.
1" 10' VERT.

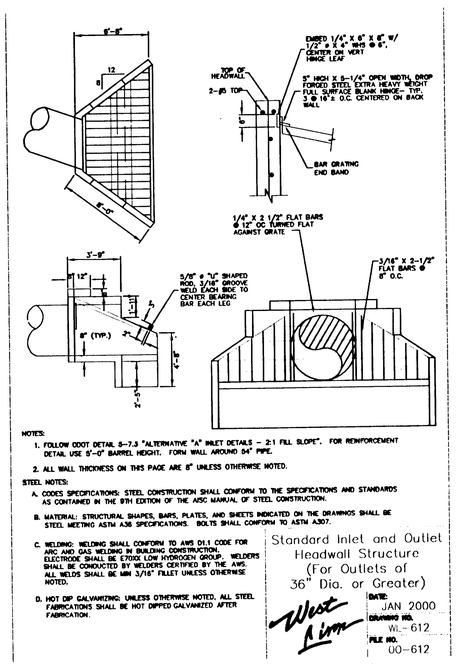

HEADWALL DETAIL

4 / C4.3

SCALE: N.T.S.

06/14/02
Date
SAS
Designed
KM, TR, SR
Drawn
Checked By Date

REGISTERED PROFESSIONAL ENGINEER
SCOTT SHUMAKER
OREGON
JULY 19, 2000
EXPIRES: 06/30/2004

"AS-BUILT"
DATE 2-26-03 BY SCS

CENTEX HOMES
AMERICAN STANDARD BUILDER
15520 SW Upper Boones Ferry Road, Suite 200
Portland, OR 97224
Phone: (503) 608-3060
Fax: (503) 608-3061

Rogerfield Phase II-52 Lots

CITY OF WEST LINN, OREGON
CULVERT CROSSING PLAN AND PROFILE

ASBUILT SUBMITTAL TO CITY OF WEST LINN 02-26-03

otak Incorporated
17355 SW Boones Ferry Road
Lake Oswego, OR 97035-5217
Phone: (503) 635-3618
FAX: (503) 635-5395

10822
Project No.
D822C43
File No.
C4.3
Sheet No.

Copyright 2002 ©

S:\ANNDWG 02/26/03 7:30pm --> R:\DWG\D822C43.DWG

XREF LIST
Ltscale: 1
Resolved
D822X005
D822X190
D822x230
D822x430
D822x600
D822x900
S822B194
Unresolved
D822x400

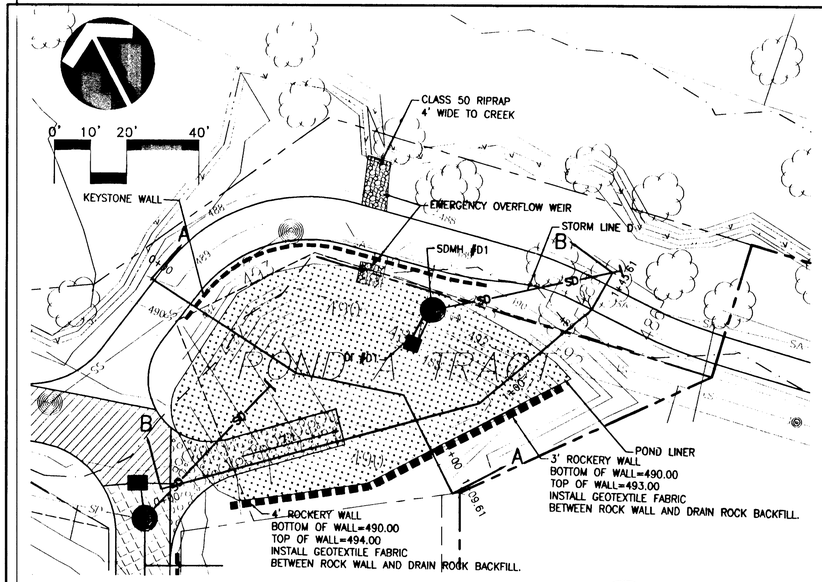

DETENTION POND A — 1 / C4.4

SCALE: 1"=20' HORZ.

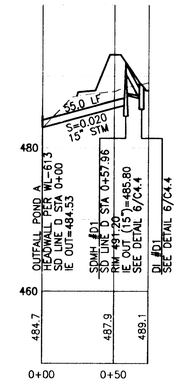

STORM DRAIN LINE D — 2 / C4.4

SCALE: 1"=50' HORZ.
1"=5' VERT.

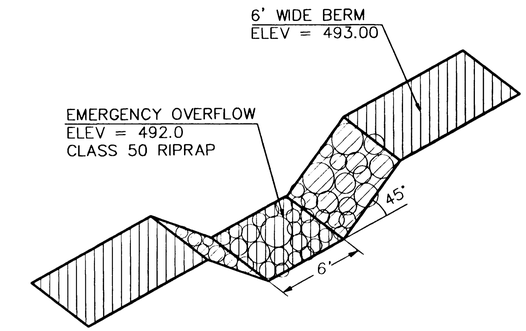

EMERGENCY OVERFLOW WEIR — 3 / C4.4

SCALE: N.T.S.

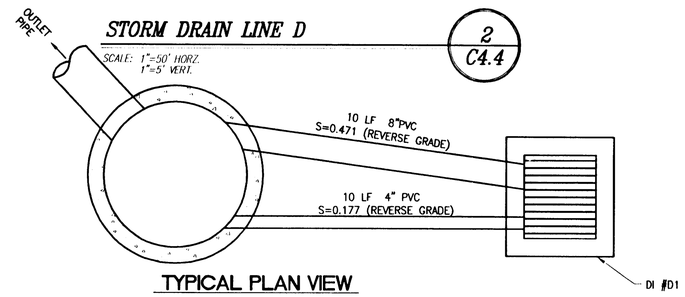

TYPICAL PLAN VIEW

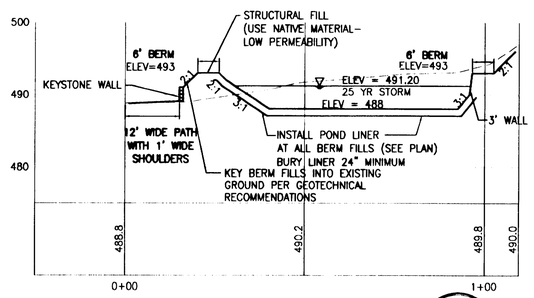

SECTION A-A — 4 / C4.4

SCALE: 1"=20' HORZ.
1"=10' VERT.

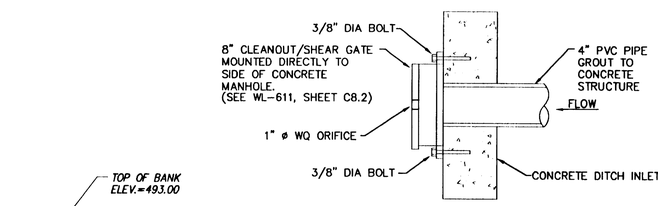

SHEAR GATE NOTES:

1. NEOPRENE RUBBER GASKET REQUIRED BETWEEN GATE FLANGE AND CONCRETE DITCH INLET.
2. CLEANOUT/SHEAR GATE TO HAVE LIFT HANDLE (SEE WL-611, SHEET C8.2) ATTACHED WITH GALVANIZED CHAIN TO TOP OF CATCH BASIN.
3. FLANGE MOUNTING BOLTS SHALL BE 3/8" DIA STAINLESS STEEL.

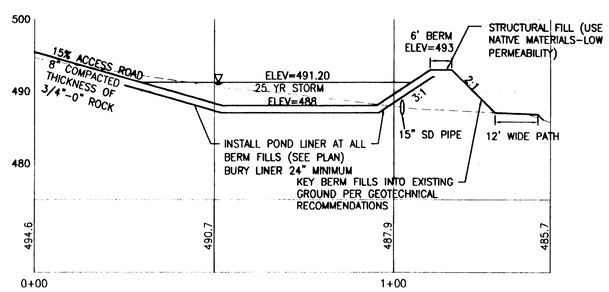

SECTION B-B — 5 / C4.4

SCALE: 1"=20' HORZ.
1"=10' VERT.

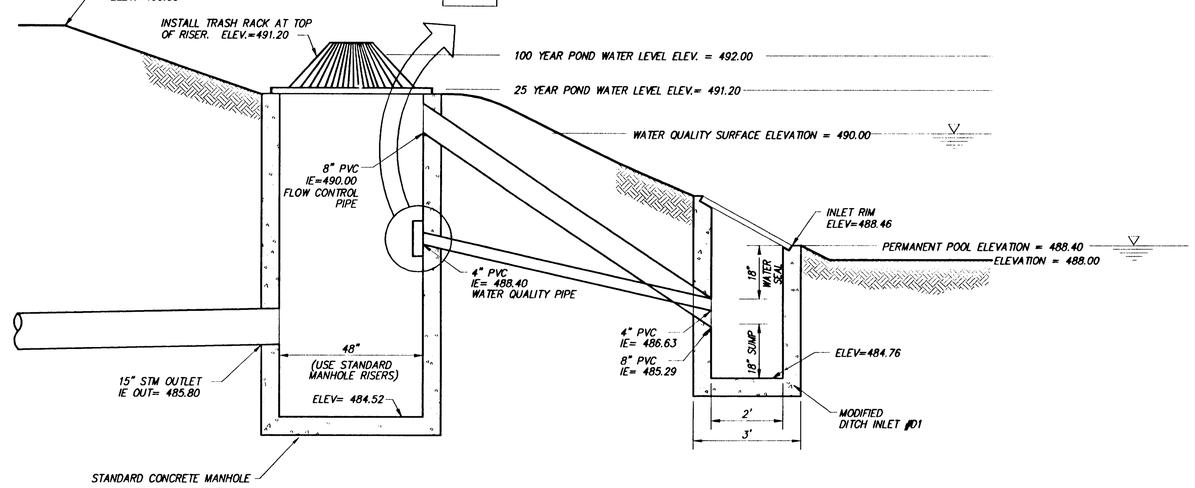

POND A OUTLET STRUCTURE — 6 / C4.4

SCALE: NTS

06/14/02
Date
SAS
Designed
KM, TR, SR
Drawn
Checked By Date

REGISTERED PROFESSIONAL ENGINEER 58,361 OREGON JUNE 13, 2002 SCOTT SHANNON

EXPIRES: 06/30/2004

"AS-BUILT"
DATE 6/26/02 BY SAS

CENTEX HOMES
A PRIVATE & SEPARATE HOME BUILDING OPERATION
16520 SW Upper Boones Ferry Road, Suite 2200
Portland, OR 97224
Phone: (503) 608-3060
Fax: (503) 608-3061

Rogerfield Phase II-52 Lots

CITY OF WEST LINN, OREGON

STORM WATER DETENTION FACILITY A

otak Incorporated
17355 SW Boones Ferry Road
Lake Oswego, OR 97035-5217
Phone: (503) 635-3618
FAX: (503) 635-5395

ASBUILT SUBMITTAL TO CITY OF WEST LINN 02-28-03

10822
Project No.
D822C44
File No.
C4.4
Sheet No.

Copyright 2002 ©

J:\SHANNON\M 02/25/03 8:12am --> R:\DWG\D822C44.DWG

XREF LIST
Ltscale: 1
Resolved
D822X005
D822x190
D822x230
D822x430
D822x600
D822x900
S822B194
Unresolved
D822x400

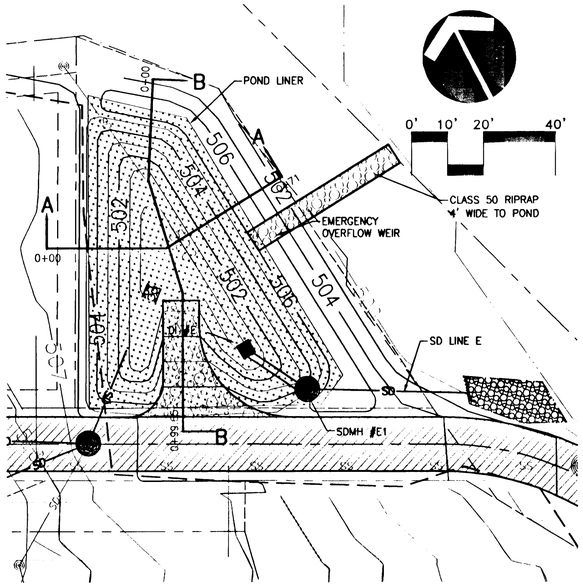

DETENTION POND B

SCALE: 1"=20' HORZ.

1 / C4.5

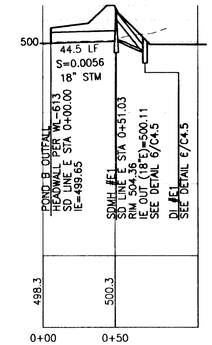

STORM DRAIN LINE E

SCALE: 1"=50' HORZ.
1"=5' VERT.

2 / C4.5

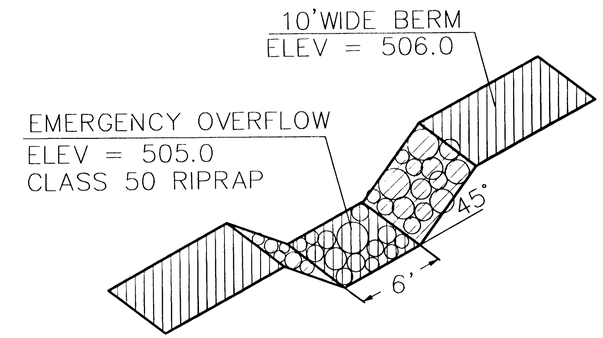

EMERGENCY OVERFLOW WEIR

SCALE: NTS

3 / C4.5

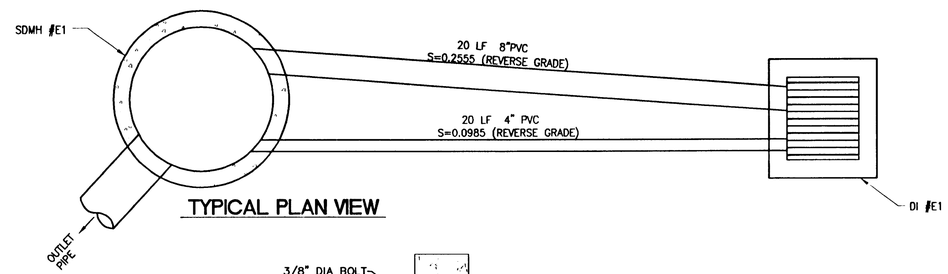

TYPICAL PLAN VIEW

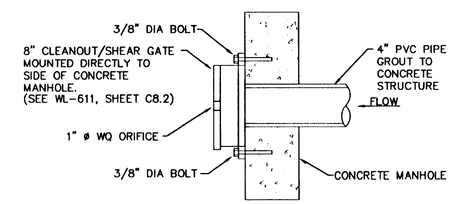

SHEAR GATE NOTES:
1. NEOPRENE RUBBER GASKET REQUIRED BETWEEN GATE FLANGE AND CONCRETE MANHOLE.
2. CLEANOUT/SHEAR GATE TO HAVE LIFT HANDLE (SEE WL-611, SHEET C8.2) ATTACHED WITH GALVANIZED CHAIN TO TOP OF CATCH BASIN.
3. FLANGE MOUNTING BOLTS SHALL BE 3/8" DIA STAINLESS STEEL.

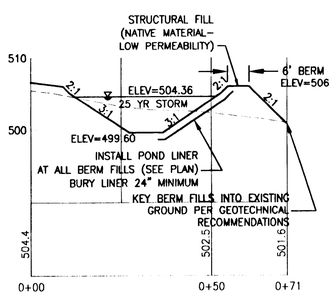

SECTION A-A

SCALE: 1"=20' HORZ.
1"=10' VERT.

4 / C4.5

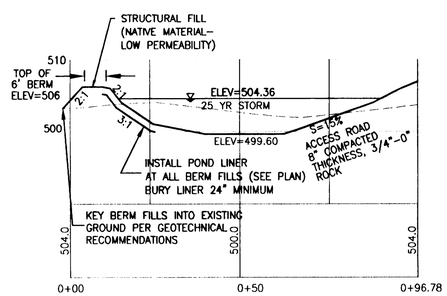

SECTION B-B

SCALE: 1"=20' HORZ.
1"=10' VERT.

5 / C4.5

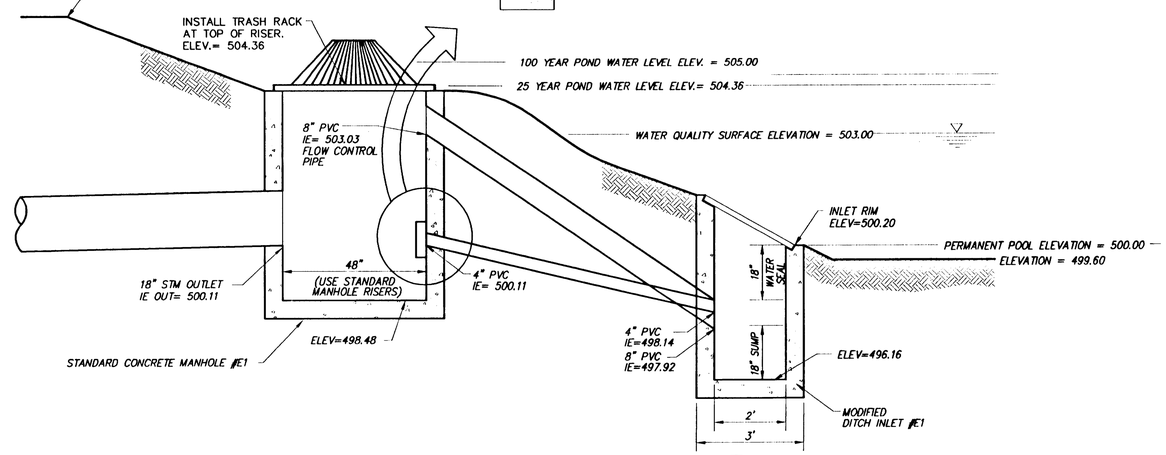

POND B OUTLET STRUCTURE

SCALE: NTS

6 / C4.5

ASBUILT SUBMITTAL TO CITY OF WEST LINN 02-26-03

06/14/02
Date
SAS
Designed
KM, TR, SR
Drawn
Checked By Date

REGISTERED PROFESSIONAL ENGINEER 58381 OREGON NOV 11 2000 SCOTT SHAMMER
EXPIRES: 06/30/2004

"AS-BUILT"
DATE 2-26-03 BY SAS

CENTEX HOMES
AMERICA'S #1 HOMEBUILDER
16520 SW Upper Boones Ferry Road, Suite #200
Portland, OR 97224
Phone: (503) 608-3060
Fax: (503) 608-3061

Rogerfield Phase II-52 Lots

CITY OF WEST LINN, OREGON

STORM WATER DETENTION FACILITY B

otak Incorporated
17355 SW Boones Ferry Road
Lake Oswego, OR 97035-5217
Phone: (503) 635-3618
FAX: (503) 635-5395

10822
Project No.
D822C45
File No.
C4.5
Sheet No.

Copyright 2002 ©

:\SHANNON\ 02/25/03 8:15pm --> R:\DWG\D822C45.DWG

XREF LIST
Ltscale: 1
Resolved
D822X005
D822x190
D822x230
D822x430
D822x600
Unresolved
D822x400

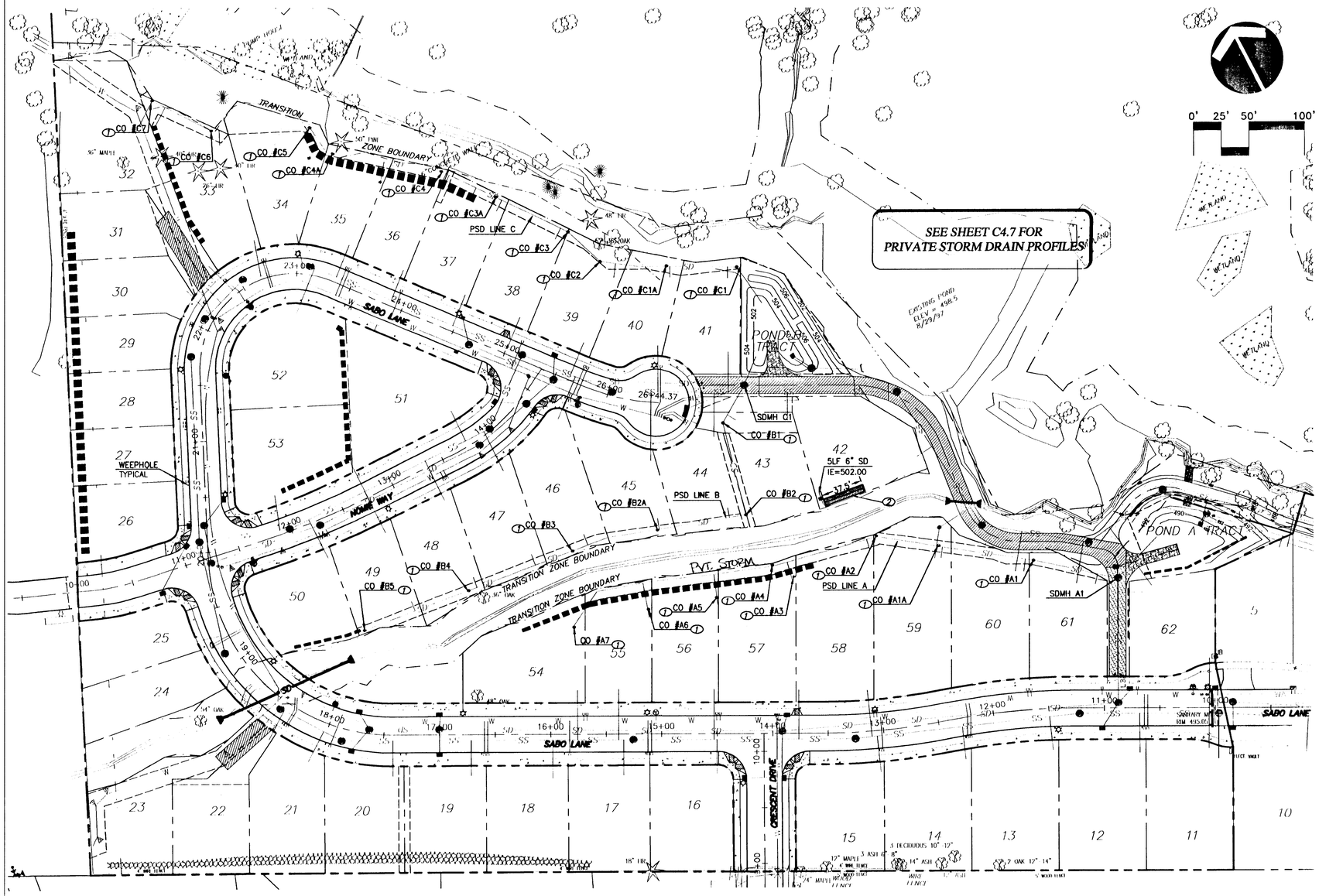

LEGEND

EXISTING

- WATER LINE
- SANITARY SEWER LINE
- STORM SEWER LINE
- SANITARY SEWER MANHOLE
- STORM DRAIN INLET
- GATE VALVE
- FIRE HYDRANT

PROPOSED

- STORM SEWER LINE
- STORM SEWER MANHOLE
- STORM SEWER CURB INLET
- WATER MAIN LINE
- WATER BLOW-OFF ASSEMBLY
- AIR RELEASE VALVE
- ROCKERY WALL

STORM DRAIN NOTES

1. ALL STORM LOT LATERALS TO BE 6" PVC AT 2% SLOPE UNLESS NOTED OTHERWISE.
2. EROSION CONTROL MUST BE INSTALLED AND MAINTAINED PER THE APPROVED EROSION CONTROL PLANS.

CONSTRUCTION NOTES

1. CONSTRUCT CLEANOUT PER CITY OF WEST LINN DETAIL #WL-206
2. INSTALL 2 SOAKER TRENCHES SIDE BY SIDE 38 FEET LONG, PER DETAIL THIS SHEET.

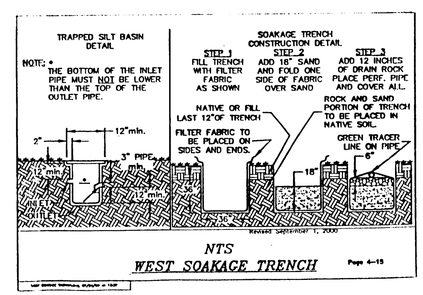

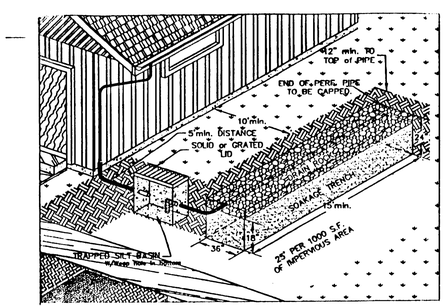

06/14/02
Date
SAS
Designed
KM, TR, SR
Drawn
Checked By Date

REGISTERED PROFESSIONAL ENGINEER SB.16 OREGON JULY 11, 2000 SCOTT SHUMAKER
EXPIRES: 06/30/2004

AS-BUILT
DATE 2-26-03 BY SAS

CENTEX HOMES
AMERICA'S #1 HOMEBUILDER
16520 SW Upper Boones Ferry Road, Suite 200
Portland, OR 97224
Phone: (503) 608-3060
Fax: (503) 608-3061

Rogerfield Phase II-52 Lots

CITY OF WEST LINN, OREGON

PRIVATE STORM DRAIN PLAN

ASBUILT SUBMITTAL TO CITY OF WEST LINN 02-26-03

otak Incorporated
17355 SW Boones Ferry Road
Lake Oswego, OR 97035-5217
Phone: (503) 635-3618
FAX: (503) 635-5395

10822
Project No.
D822C46
File No.
C4.6
Sheet No.

Copyright 2002 ©

SHANNON 02/25/03 8:23am --> R:\DWG\D822C46.DWG

XREF LIST
Ltscale: 1
Resolved
D822X005
D822x230
D822x630

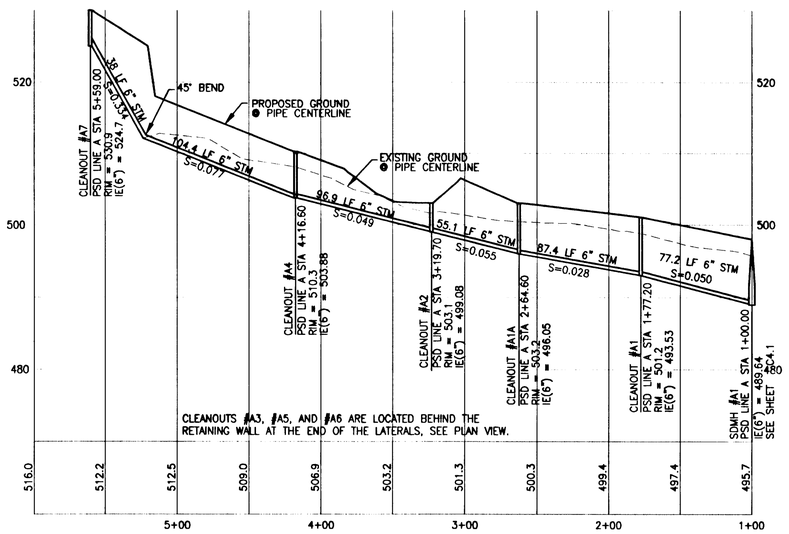

PRIVATE STORM DRAIN LINE A

SCALE: 1"=50' HORZ.
1"=10' VERT.

1 / C4.7

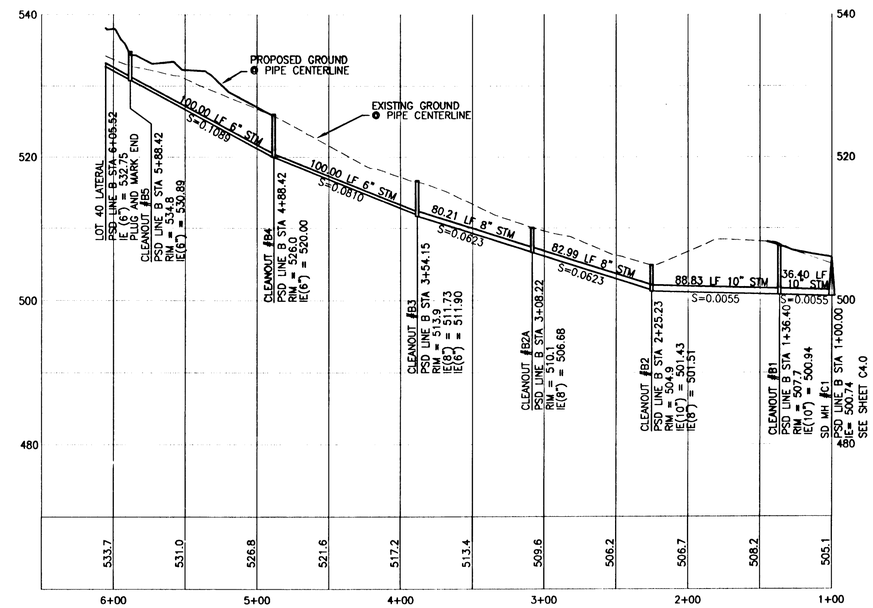

PRIVATE STORM DRAIN LINE B

SCALE: 1"=50' HORZ.
1"=10' VERT.

2 / C4.7

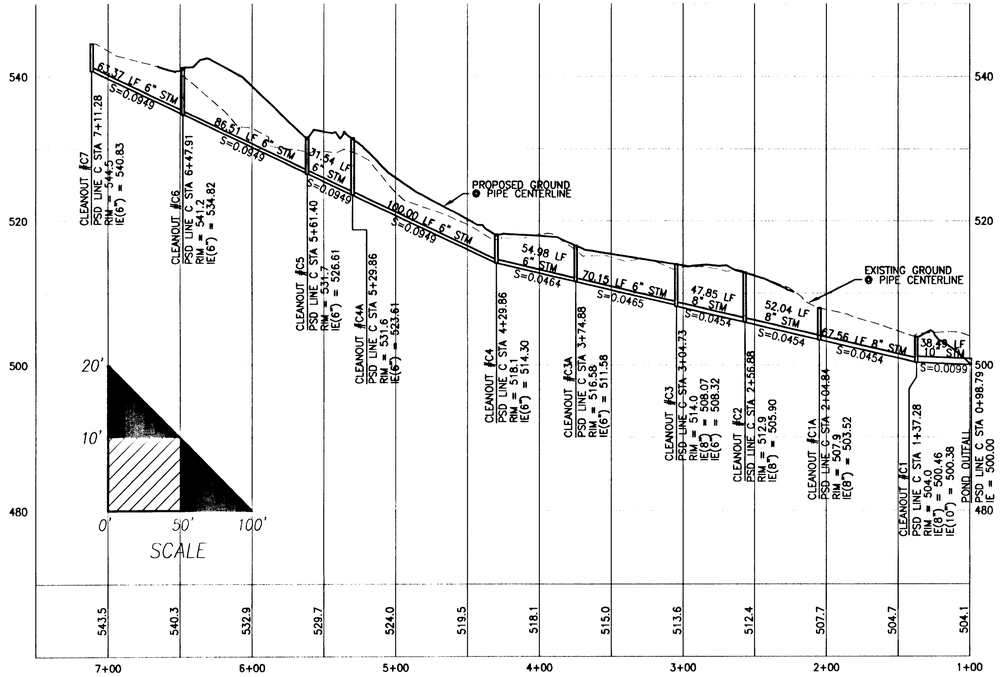

PRIVATE STORM DRAIN LINE C

SCALE: 1"=50' HORZ.
1"=10' VERT.

3 / C4.7

06/14/02
Date
SAS
Designed
KM, TR, SR
Drawn
Checked By Date

REGISTERED PROFESSIONAL ENGINEER
SCOTT SHUMAKER
OREGON
JULY 17, 2003

EXPIRES: 06/30/2004

"AS-BUILT"
DATE 2-26-03 BY SAS

CENTEX HOMES
AMERICA'S #1 HOMEBUILDER
16520 SW Upper Boones Ferry Road, Suite #200
Portland, OR 97224
Phone: (503) 608-3060
Fax: (503) 608-3061

Rogerfield Phase II-52 Lots

CITY OF WEST LINN, OREGON

PRIVATE STORM DRAIN PROFILES

ASBULT SUBMITTAL TO CITY OF WEST LINN 02-28-03

otak Incorporated
17355 SW Boones Ferry Road
Lake Oswego, OR 97035-5217
Phone: (503) 635-3618
FAX: (503) 635-5395

10822
Project No.
D822C47
File No.
C4.7
Sheet No.

Copyright 2002 ©

LT: SHANNONW 02/25/03 8:24am --> R:\DWG\D822C47.DWG

XREF LIST
Ltscale: 1
Resolved
D822X005
D822x190
D822x230
D822x430
D822x600
D822XWRG
S822B194
Unresolved
S822B193

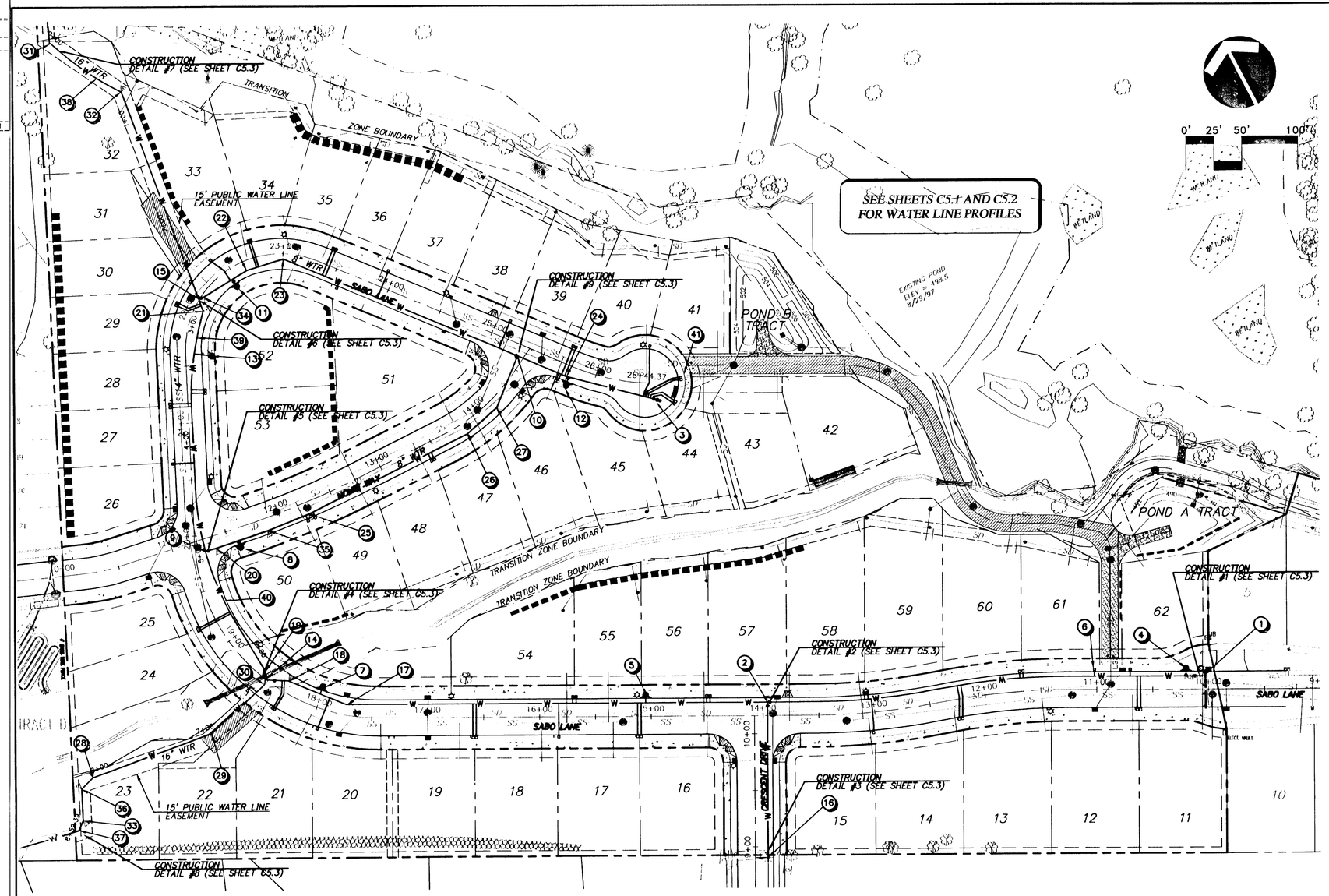

LEGEND

EXISTING

- WATER LINE
- SANITARY SEWER LINE
- STORM SEWER LINE
- SANITARY SEWER MANHOLE
- STORM DRAIN INLET
- GATE VALVE
- FIRE HYDRANT

PROPOSED

- STORM SEWER LINE
- STORM SEWER MANHOLE
- STORM SEWER CURB INLET
- WATER MAIN LINE
- WATER BLOW-OFF ASSEMBLY
- AIR RELEASE VALVE
- ROCKERY WALL

NOTE:

CONTRACTOR TO COORDINATE SCHEDULING OF CONNECTIONS TO 14" WATER LINE WITH CITY OF WEST LINN PUBLIC WORKS DEPARTMENT. THE NEW 16" LINE IS TO BE BUILT, TESTED, AND ACCEPTED BY THE CITY PRIOR TO CONNECTION TO THE EXISTING 14" MAIN. CONTRACTOR IS TO PROVIDE TWO CREWS (ONE CREW FOR EACH CONNECTION POINT) IN ORDER TO MINIMIZE DISRUPTIONS TO THE SYSTEM. AT NO TIME IS THE CONTRACTOR TO OPERATE CITY WATERLINE VALVES. CONTRACTOR TO PROVIDE A DETAILED CONSTRUCTION SEQUENCE AND SCHEDULE FOR THE WATERLINE CONNECTIONS TO THE CITY AND THE DESIGN ENGINEER FOR APPROVAL PRIOR TO STARTING WORK.

WATER LINE CONSTRUCTION NOTES

WATER LINE STATIONS REFER TO ℄ OF STREET

1. STA 10+05 12' RT SABO LANE REMOVE EXISTING BLOWOFF ASSEMBLY CONNECT TO EXISTING 8" WATER LINE, 8" GATE VALVE.
2. STA 13+96.10 12' RT SABO LANE INSTALL 8"x 8" TEE WITH THRUST BLOCK 2- 8" GATE VALVES
3. STA 26+55.60 16.16' RT SABO LANE INSTALL 2" BLOWOFF ASSEMBLY PER DETAIL WL-404A.
4. STA 10+19 19.0' RT SABO LANE INSTALL FIRE HYDRANT ASSEMBLY PER DETAIL WL-401.
5. STA 15+05, 19.0' RT SABO LANE INSTALL FIRE HYDRANT ASSEMBLY PER DETAIL WL-401.
6. STA 11+02.12 17.5' RT SABO LANE INSTALL 1" IRRIGATION METER
7. STA 18+01.45 19.0' RT SABO LANE INSTALL FIRE HYDRANT ASSEMBLY PER DETAIL WL-401.
8. STA 11+58.83 17.0' RT NOMIE WAY INSTALL FIRE HYDRANT ASSEMBLY PER DETAIL WL-401. WITH RESTRAINED JOINTS.
9. STA 19+85.56 9.15' RT SABO LANE INSTALL 16"x 16" TEE, 1- 8" GATE VALVE, 1-16" BUTTERFLY VALVE, 16"X8" REDUCER, WITH RESTRAINED JOINTS.
10. STA 25+28.63 10' RT SABO LANE INSTALL 8"x 8" TEE WITH 2- 8" GATE VALVES, WITH RESTRAINED JOINTS.
11. STA 22+45.64 17.0' RT SABO LANE INSTALL FIRE HYDRANT ASSEMBLY PER DETAIL WL-401, WITH RESTRAINED JOINTS.
12. STA 25+78.42 17.0' RT SABO LANE INSTALL FIRE HYDRANT ASSEMBLY PER DETAIL WL-401, WITH RESTRAINED JOINTS.
13. STA 21+58.86 8.0'RT SABO LANE INSTALL AIR RELEASE VALVE PER DETAIL WL-405.
14. STA 18+52.53 0.85' LT SABO LANE INSTALL 16"x 16" TEE, 1-16"X8" REDUCER 1- 16" BUTTERFLY VALVE, 1-8" GATE VALVE, WITH RESTRAINED JOINTS.
15. STA 22+10.73 0.77 LT SABO LANE INSTALL 16"x 16" TEE, 1-16"X8" REDUCER 1- 16" BUTTERFLY VALVE, 1- 8" GATE VALVE, WITH RESTRAINED JOINTS.
16. STA 8+95 7' RT CRESENT DRIVE REMOVE EXISTING BLOWOFF ASSEMBLY CONNECT TO EXISTING 8" WATER LINE.
17. STA 17+74.04 9.16' RT SABO LANE DEFLECT WATER LINE 22'30'00" WITH 22 ½° BEND, WITH RESTRAINED JOINTS.
18. STA 18+33.89 10.54' RT SABO LANE DEFLECT WATER LINE 19'56'11" WITH 22 ½° BEND
19. STA 18+57.15 5.38' RT SABO LANE DEFLECT WATER LINE 33'45'00" WITH 1-22 ½° AND 1-11 1/4° BEND, WITH RESTRAINED JOINTS.
20. STA 11+37.80 11.31' RT SABO LANE DEFLECT WATER LINE 3'12'29".
21. STA 22+02.93 7.80' RT SABO LANE DEFLECT WATER LINE 33'45'00" WITH 1-22 1/2' AND 1-11 1/4' BEND
22. STA 22+62.74 8.68' RT SABO LANE DEFLECT WATER LINE 14'37'32" WITH 11 ¼° BEND, WITH RESTRAINED JOINTS.
23. STA 23+00.30 4.82' RT SABO LANE DEFLECT WATER LINE 39'37'38" WITH 45' BEND, WITH RESTRAINED JOINTS.
24. STA 25+77.49 9.80' RT SABO LANE DEFLECT WATER LINE 8'20'22" WITH 11 ¼° BEND
25. STA 12+25.25 10.74' RT NOMIE WAY DEFLECT WATER LINE 5'00'00"
26. STA 13+81.16 10.00' RT NOMIE WAY DEFLECT WATER LINE 14'40'00" WITH 11 1/4' BEND
27. STA 14+14.45 8.30' RT NOMIE WAY DEFLECT WATER LINE 24'54'00" WITH 22 ½° BEND
28. *STA 8+08.19 (WTR OFST) DEFLECT WATER LINE 24'40'20" WITH 22 1/2' BEND*
29. *STA 6+96.06 (WTR OFST) DEFLECT WATER LINE 22'30'00" WITH 22 1/2' BEND*
30. STA 18+50.28 4.11' LT SABO. DEFLECT WATER LINE 45'00'00" WITH 45' BEND, WITH RESTRAINED JOINTS.
31. STA 0+00 (WTR OFST). CONNECT TO EXISTING 14" WATER LINE WITH 45' BEND. SEE COORDINATION NOTE THIS SHEET. CONFIRM LOCATION AND DEPTH OF EXISTING 14" WATER LINE BY POTHOLING PRIOR TO BEGINNING CONSTRUCTION.
32. STA 0+76.76 (WTR OFST). DEFLECT WATER LINE 42'00'00" WITH 45' BEND
33. STA 8+50.01 (WTR OFST). DEFLECT WATER LINE 26'31'53" WITH 22 1/2' BEND
34. STA 22+17.42 4.04' RT SABO. DEFLECT WATER LINE 11'41'13" WITH 1-11 ¼° BEND
35. STA 11+86.03 11.00'RT NOMIE WAY DEFLECT WATER LINE 3'00'00"
36. STA 8+22.44 (WTR OFST). DEFLECT WATER LINE 48'00'00" WITH 1-45' BEND
37. STA 8+56.43 (WTR OFST). CONNECT TO EXISTING 14" WATER LINE WITH 45' BEND. SEE COORDINATION NOTE THIS SHEET. CONFIRM LOCATION AND DEPTH OF EXISTING 14" WATER LINE BY POTHOLING PRIOR TO BEGINNING CONSTRUCTION.
38. STA 0+10.00 TO STA 0+71.19 (WTR OFST). DEFLECT WATER LINE RADIUS=260' APPROXIMATELY 3' PER JOINT.
39. STA 21+11.35 TO STA 21+87.21 DEFLECT WATERLINE RADIUS=260' APPROXIMATELY 3' PER JOINT.
40. STA 19+07.92 TO STA 20+43.42 DEFLECT WATER LINE RADIUS=260' APPOXIMATELY 3' PER JOINT.
41. STA 0+83.10 CUL-DE-SAC-2 INSTALL 1" IRRIGATION METER FOR TRACT B.

ASBUILT SUBMITTAL TO CITY OF WEST LINN 02-26-03

06/14/02
Date
SAS
Designed
KM, TR, SR
Drawn
Checked By Date

REGISTERED PROFESSIONAL ENGINEER 38,381 OREGON JULY 11, 2000 SCOTT SHANNON

EXPIRES: 06/30/2004

"AS-BUILT" DATE 2-26-03 BY SAS

CENTEX HOMES
AMERICA'S #1 HOMEBUILDER
16520 SW Upper Boones Ferry Road, Suite #200
Portland, OR 97224
Phone: (503) 608-3060
Fax: (503) 608-3061

Rogerfield Phase II-52 Lots

CITY OF WEST LINN, OREGON

WATER LINE PLAN

otak Incorporated
17355 SW Boones Ferry Road
Lake Oswego, OR 97035-5217
Phone: (503) 635-3618
FAX: (503) 635-5395

10822
Project No.
D822C50
File No.
C5.0
Sheet No.

Copyright 2002 ©

XREF LIST
Ltscale: 1
Resolved
D822X005
D822x230
D822x600
D822x900

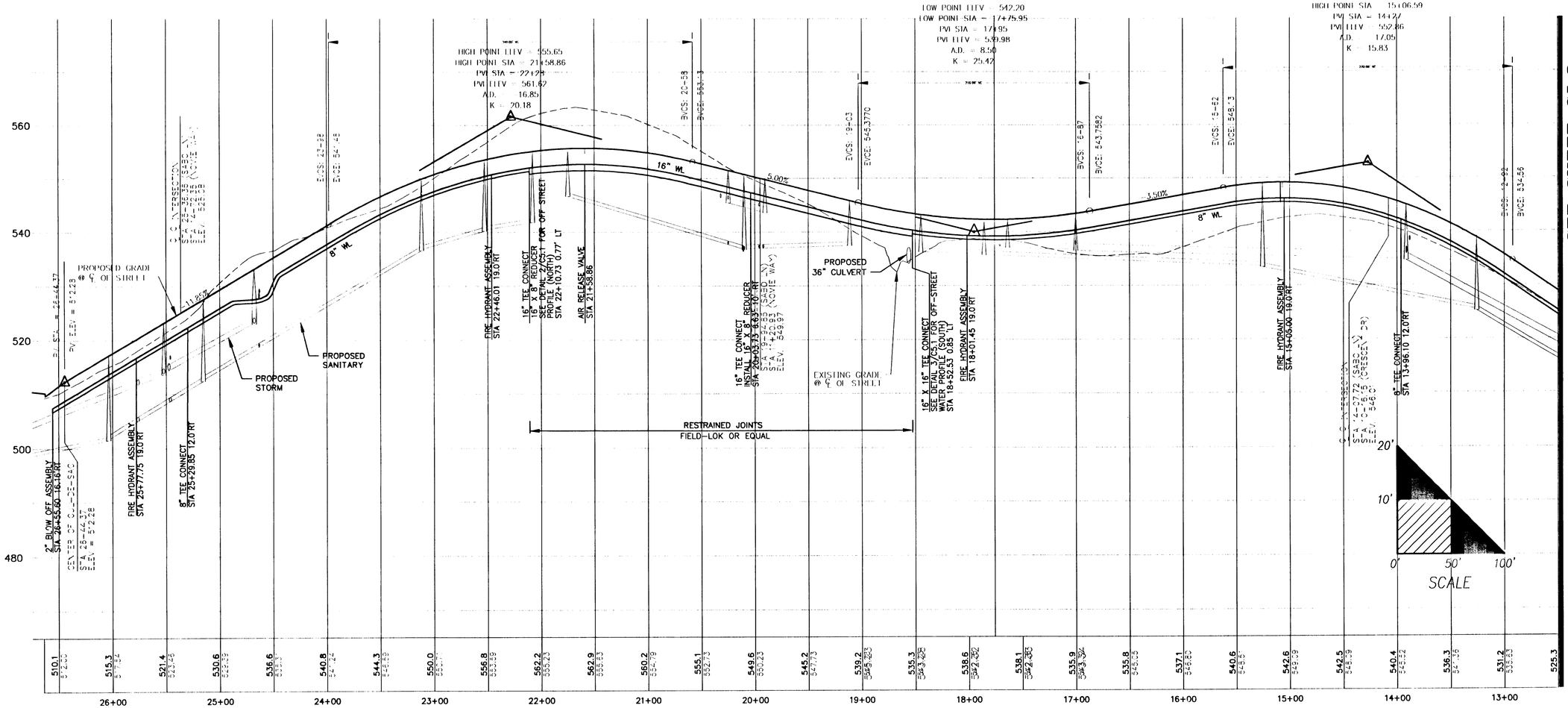

SEE SHEET C5.2

MATCHLINE STA 12+25

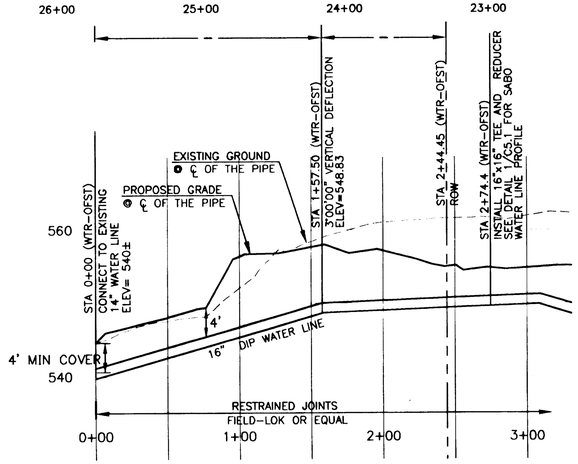

OFF STREET WATER PROFILE (NORTH) 2 C5.1

SCALE: 1"=50' HORZ. 1"=10' VERT.

SABO LANE WATERLINE PROFILE 1 C5.1

SCALE: 1"=50' HORZ. 1"=10' VERT.

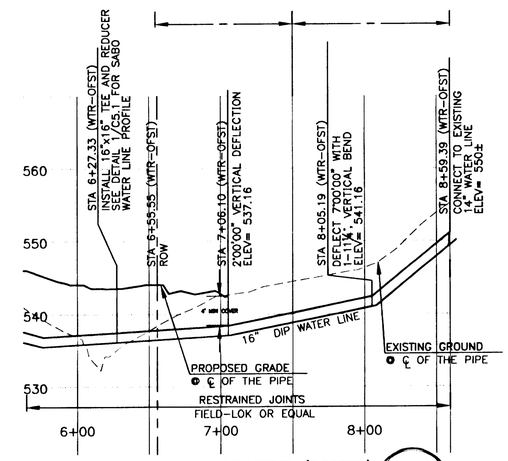

OFF STREET WATER PROFILE (SOUTH) 3 C5.1

SCALE: 1"=50' HORZ. 1"=10' VERT.

ASBUILT SUBMITTAL TO CITY OF WEST LINN 02-28-03

06/14/02
Date
SAS
Designed
KM, TR, SR
Drawn
Checked By Date

REGISTERED PROFESSIONAL ENGINEER 59361 OREGON JULY 15, 2003 SCOTT SHUMAKER
EXPIRES: 06/30/2004

"AS-BUILT"
DATE 2-28-03 BY SAS

CENTEX HOMES
AMERICAN STANDARD HOMEBUILDER
16520 SW Upper Boones Ferry Road, Suite 200
Portland, OR 97224
Phone: (503) 608-3060
Fax: (503) 608-3061

Rogerfield Phase II-52 Lots

CITY OF WEST LINN, OREGON
WATER LINE PROFILE
SABO DRIVE - END TO STA 12+25

otak Incorporated
17355 SW Boones Perry Road
Lake Oswego, OR 97035-5217
Phone: (503) 635-3618
FAX: (503) 635-5395

10822
Project No.
D822C51
File No.
C5.1
Sheet No.

Copyright 2002 ©

I:\SHANNON\ 02/25/03 8:36am ---> R:\CWO\D822C51.DWG

XREF LIST
Ltscale: 1
Resolved
D822X005
D822x230
D822x900

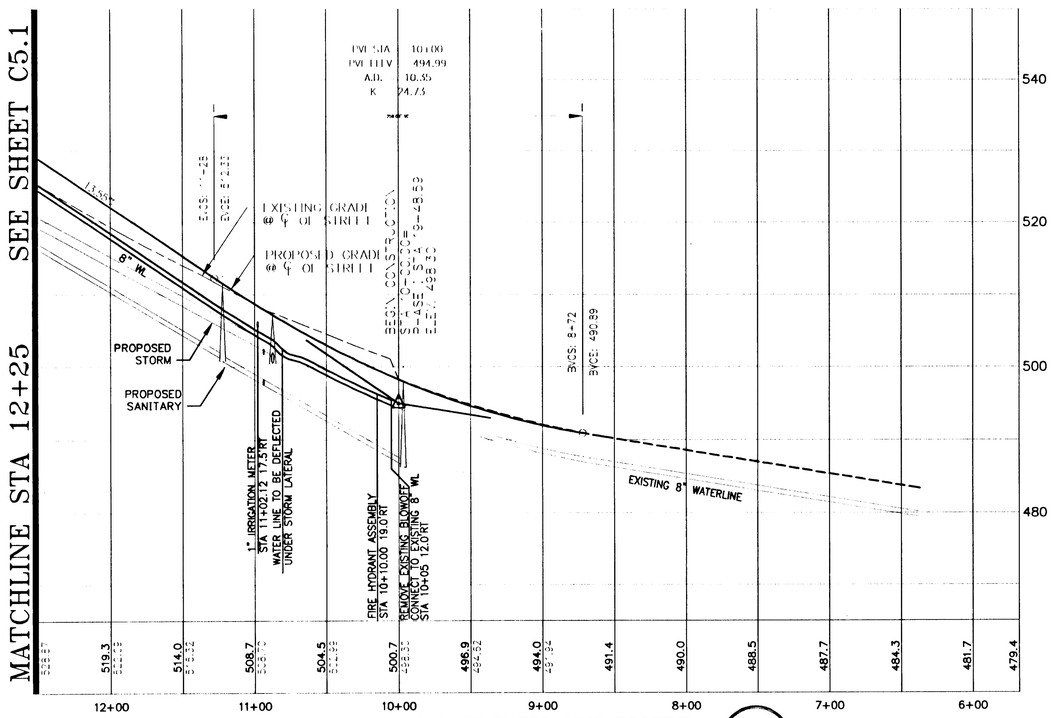

SABO LANE WATER LINE PROFILE (1 / C5.2)

SCALE: 1"=50' HORZ. 1"=10' VERT.

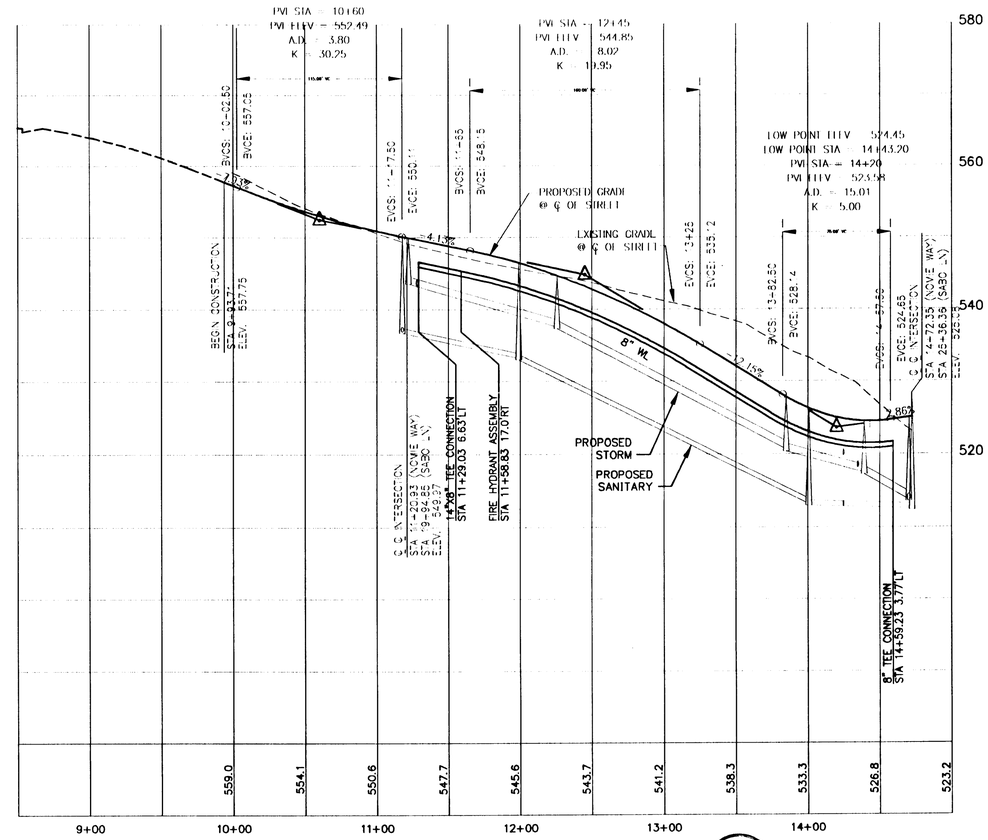

NOMIE WAY WATERINE PROFILE (1 / C5.2)

SCALE: 1"=50' HORZ. 1"=10' VERT.

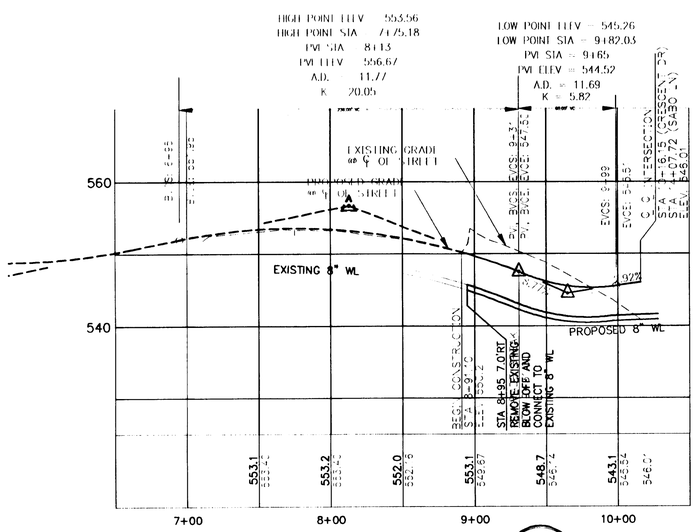

CRESENT DRIVE WATER LINE PROFILE (3 / C5.2)

SCALE: 1"=50' HORZ. 1"=10' VERT.

06/14/02
Date
SAS
Designed
KM, TR, SR
Drawn
Checked By Date

REGISTERED PROFESSIONAL ENGINEER 58,381 OREGON JULY 1, 2003 SCOTT A. SHANNON

EXPIRES: 06/30/2004

"AS-BUILT" DATE 2-26-03 BY SAS

CENTEX HOMES
AMERICA'S #1 HOME BUILDER
16520 SW Upper Boones Ferry Road, Suite #200
Portland, OR 97224
Phone: (503) 608-3060
Fax: (503) 608-3061

Rogerfield Phase II-52 Lots

CITY OF WEST LINN, OREGON
WATER LINE PROFILE
SABO DRIVE STA 12+25 TO STA 8+00,
NOMIE WAY AND CRESENT DRIVE

ASBUILT SUBMITTAL TO CITY OF WEST LINN 02-26-03

otak Incorporated
17355 SW Boones Ferry Road
Lake Oswego, OR 97035-5217
Phone: (503) 635-3618
FAX: (503) 635-5395

10822
Project No.
D822C52
File No.
C5.2
Sheet No.

Copyright 2002 ©

SHANNONV 02/25/03 8:42am --> R:\DWG\D822C52.DWG

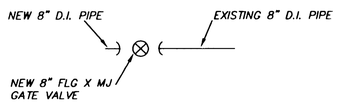

CONSTRUCTION DETAIL #1
SABO LANE STA: 10+05 12' RT
(NTS)

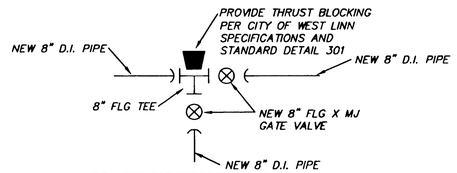

CONSTRUCTION DETAIL #2
SABO LANE STA: 13+96.10 12' RT
(NTS)

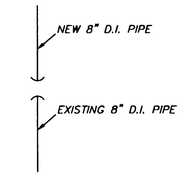

CONSTRUCTION DETAIL #3
CRESENT DRIVE STA: 8+95 7' RT
(NTS)

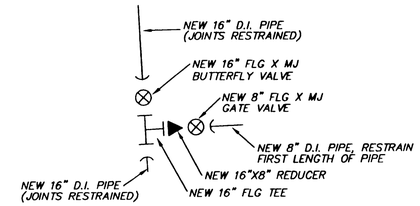

CONSTRUCTION DETAIL #4
SABO LANE STA 18+52.53 0.85' LT
(NTS)

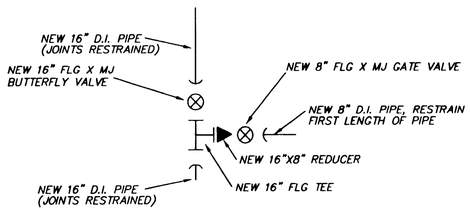

CONSTRUCTION DETAIL #5
SABO LANE 19+85.56 9.15' RT
(NTS)

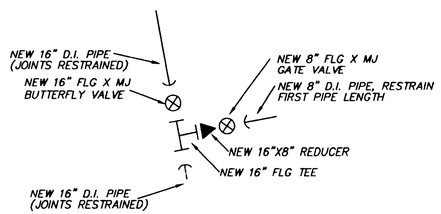

CONSTRUCTION DETAIL #6
SABO LANE 22+10.73 0.77' LT
(NTS)

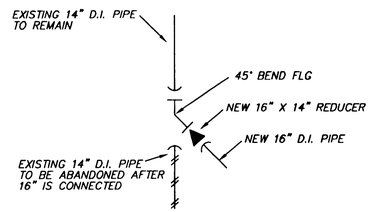

CONSTRUCTION DETAIL #7
(WTR OFST) STA: 0+00
(NTS)

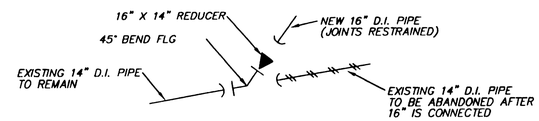

CONSTRUCTION DETAIL #8
(WTR OFST) STA 8+56.43
(NTS)

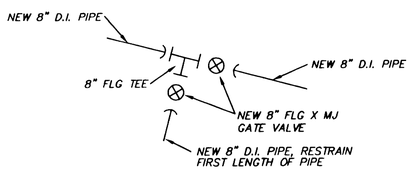

CONSTRUCTION DETAIL #9
SABO LANE STA: 25+28.63 10' RT
(NTS)

06/14/02
Date
SAS
Designed
KM, TR, SR
Drawn
Checked By Date

REGISTERED PROFESSIONAL ENGINEER 56861 OREGON JULY 11, 2003 SCOTT SHUMAKER
EXPIRES: 06/30/2004

AS-BUILT
DATE 2-26-03 BY SAS

CENTEX HOMES
AMERICA'S #1 HOMEBUILDER
16520 SW Upper Boones Ferry Road, Suite #200
Portland, OR 97224
Phone: (503) 608-3060
Fax: (503) 608-3061

Rogerfield Phase II-52 Lots

30000ICE
CITY OF WEST LINN, OREGON
WATER LINE INTERSECTION DETAILS

otak Incorporated
17355 SW Boones Ferry Road
Lake Oswego, OR 97035-5217
Phone: (503) 635-3618
FAX: (503) 635-5395

ASBUILT SUBMITTAL TO CITY OF WEST LINN 02-26-03

10822
Project No.
D822C53
File No.
C5.3
Sheet No.

Copyright 2002 ©

REF LIST
Lscale: 1
Resolved
D822X005
L: SHANNON 02/25/03 8:49am --> R:\DWG\D822C53.DWG

XREF LIST
Ltscale: 1
Resolved
D822X005
D822x190
D822x230
D822x430
D822XWRG
S822B194
Unresolved
D822x400

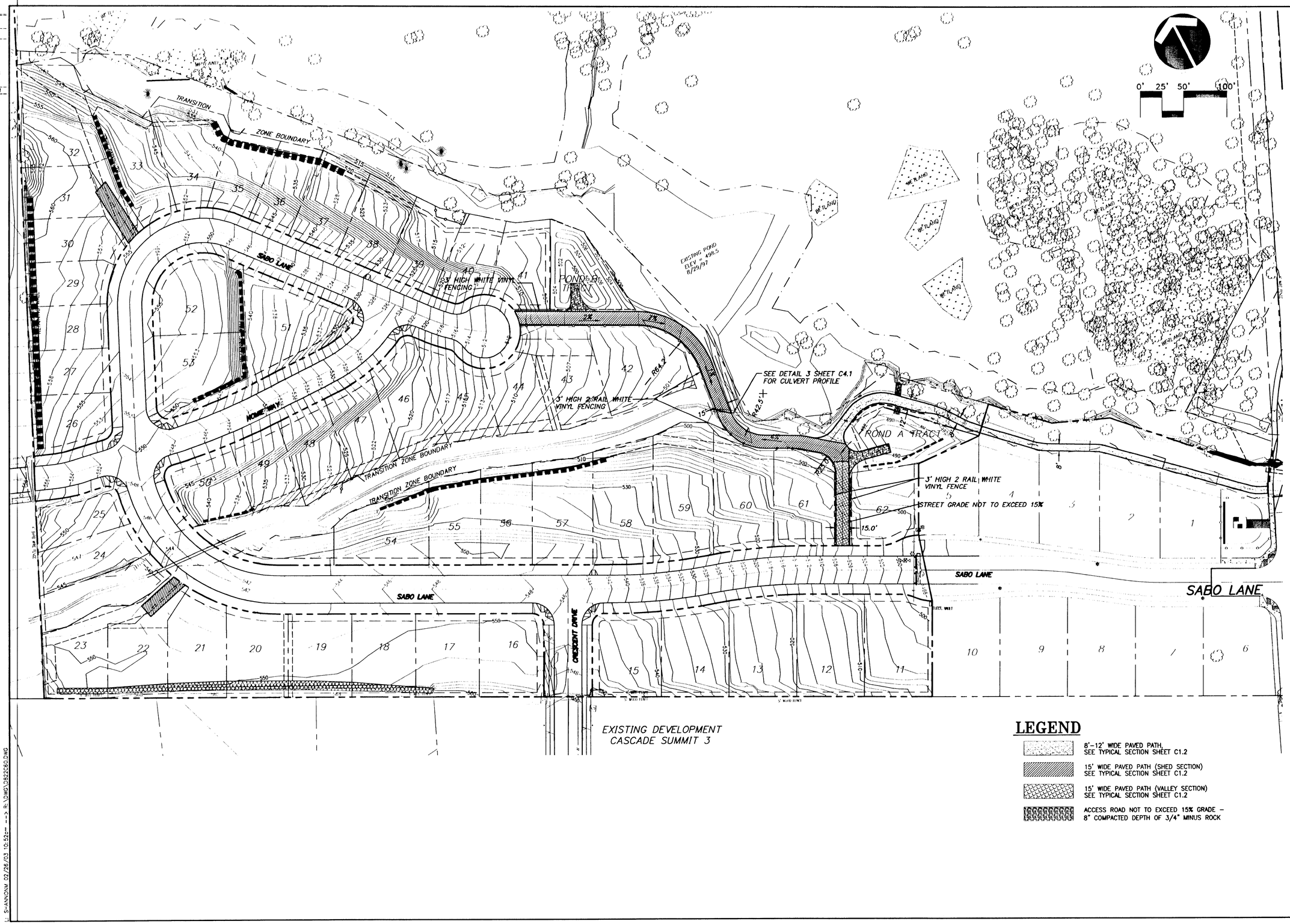

LEGEND

- 8'-12' WIDE PAVED PATH, SEE TYPICAL SECTION SHEET C1.2
- 15' WIDE PAVED PATH (SHED SECTION) SEE TYPICAL SECTION SHEET C1.2
- 15' WIDE PAVED PATH (VALLEY SECTION) SEE TYPICAL SECTION SHEET C1.2
- ACCESS ROAD NOT TO EXCEED 15% GRADE - 8" COMPACTED DEPTH OF 3/4" MINUS ROCK

ASBUILT SUBMITTAL TO CITY OF WEST LINN 02-28-03

06/14/02
Date
SAS
Designed
KM, TR, SR
Drawn
Checked By Date

REGISTERED PROFESSIONAL ENGINEER
59,381
OREGON
JULY 13, 2000
SCOTT SHUMAKER
EXPIRES: 06/30/2004

"AS-BUILT"
DATE 2-24-03 BY SAS

CENTEX HOMES
AMERICA'S #1 HOMEBUILDER
16520 SW Upper Boones Ferry Road, Suite #200
Portland, OR 97224
Phone: (503) 608-3060
Fax: (503) 608-3061

Rogerfield Phase II-52 Lots

CITY OF WEST LINN, OREGON

PUBLIC TRAIL PLAN

otak Incorporated
17355 SW Boones Ferry Road
Lake Oswego, OR 97035-5217
Phone: (503) 635-3618
FAX: (503) 635-5395

10822
Project No.
D822C60
File No.
C6.0
Sheet No.

Copyright 2002 ©

L: SHANNONW 02/26/03 10:52** --> R:\DWG\D822C60.DWG

XREF LIST
Ltscale: 1
Resolved
D822X005
D822X190
D822x230
D822x430
D822x600
D822XWRG
LB22X700

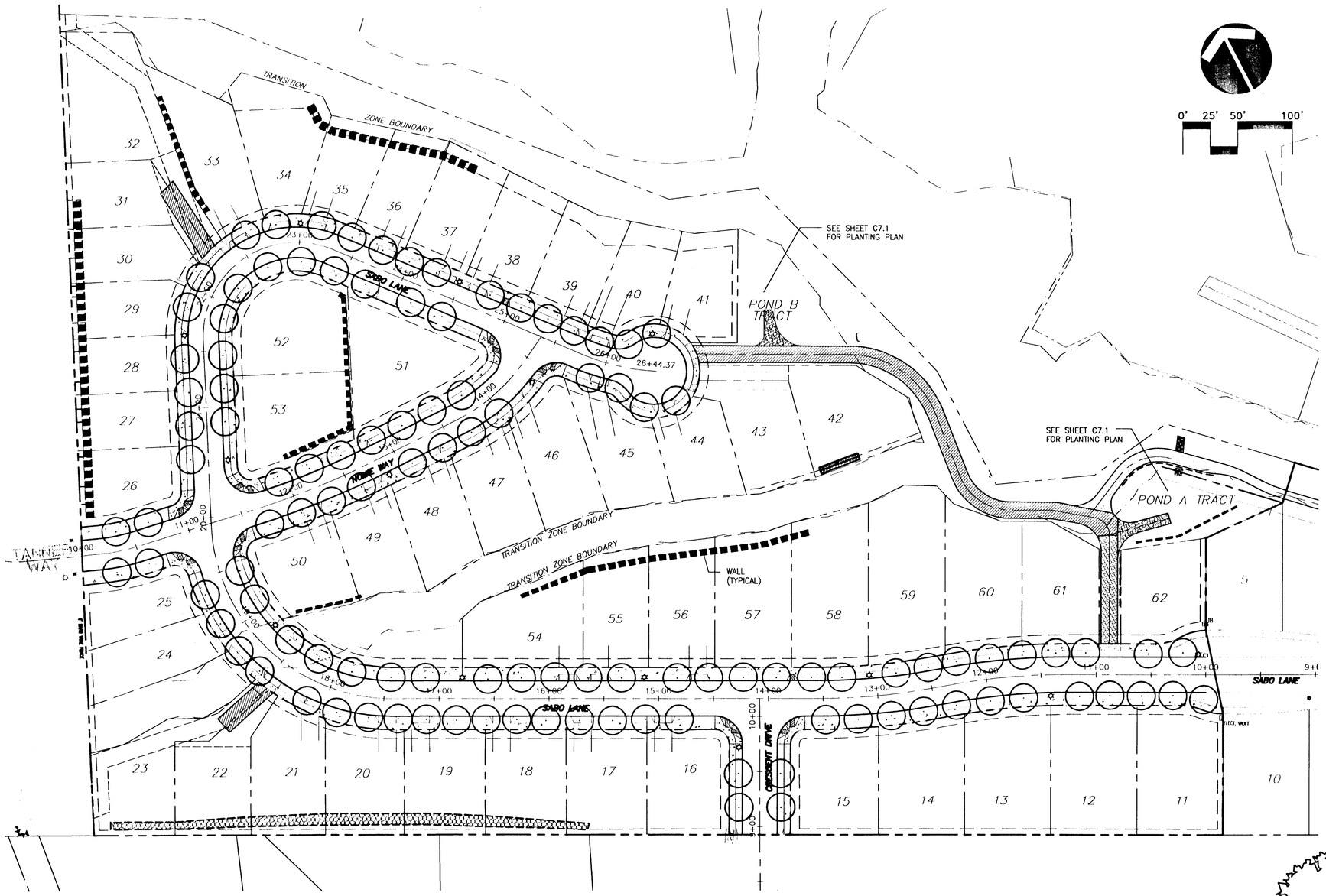

PLANTING NOTES:

1. SOIL PREPARATION: PROVIDE 4" MINIMUM TOPSOIL IN ALL PLANTING AREAS WHERE SLOPES AND EXISTING SOIL TEXTURES WILL HOLD THE SOIL. PROVIDE TOPSOIL FOR BACKFILL IN ALL PLANTING POCKETS. MAY BE LIMITED PLANTING POCKETS IN AREAS THAT ARE TOO STEEP OR UNSTABLE TO HOLD BLANKET TOPSOIL.

2. PROVIDE HEALTHY PLANT MATERIAL, CONSISTENT WITH QUALITY DEFINITIONS, GRADING TOLERANCES AN CALIPER TO HEIGHT RATIOS. NO LESS THAN MINIMUMS AS SPECIFIED IN "AMERICAN STANDARDS OF NURSERY STOCK". ANZI Z60.1-1973, SPECIES SIZE AND QUANTITIES SPECIFIED PER PLAN.

3. LOCATE SPACE AND GROUP PLANTS IN FIELD AS DIRECTED BY OWNER'S REPRESENTATIVE AND AS INDICATED PER PLAN.

PLANT MATERIAL LIST

TREE	NAME	SIZE	CONDITION	QUANTITY
⊙	SCARLET OAK QUERCUS COCCINEA	2" CAL.	B&B	101

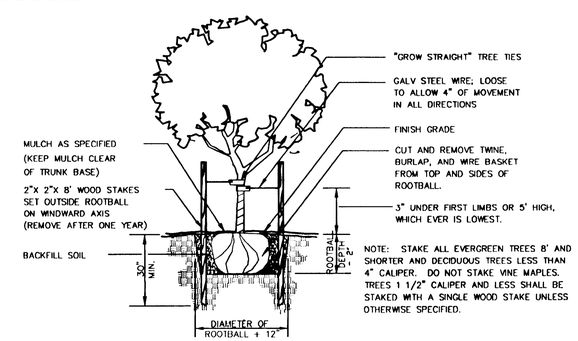

NOTE: STAKE ALL EVERGREEN TREES 8' AND SHORTER AND DECIDUOUS TREES LESS THAN 4" CALIPER. DO NOT STAKE VINE MAPLES. TREES 1 1/2" CALIPER AND LESS SHALL BE STAKED WITH A SINGLE WOOD STAKE UNLESS OTHERWISE SPECIFIED.

1 TREE STAKING DETAIL
NOT TO SCALE

ASBUILT SUBMITTAL TO CITY OF WEST LINN 02-28-03

06/14/02
Date
LMB
Designed
LMB
Drawn
KEL 9-10-01
Checked By Date

TREES HAVE NOT BEEN PLANTED AT THIS TIME BY CITY.

CENTEX HOMES
A DIVISION OF CENTEX REAL ESTATE CORP.
16520 SW Upper Boones Ferry Road, Suite 200
Portland, OR 97224
Phone: (503) 608-3060
Fax: (503) 608-3061

Rogerfield Phase II-52 Lots

CITY OF WEST LINN, OREGON
STREET TREE PLAN

otak Incorporated
17355 SW Boones Ferry Road
Lake Oswego, OR 97035-5217
Phone: (503) 635-3618
FAX: (503) 635-5395

10822
Project No.
L822P001
File No.
C7.0
Sheet No.

Copyright 2002 ©

S:\ANYONW 02/26/03 10:37am --> R:\DWG\L822P001.DWG

XREF LIST
Ltscale: 1
Resolved
D822X005
D822x190
D822x230
D822x400
D822x430
D822x600
D822x900
L822X701

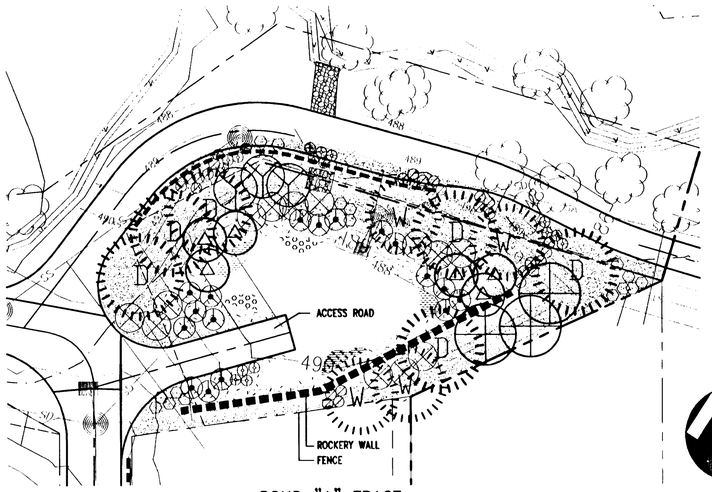

POND "A" TRACT

0' 10' 20' 40'

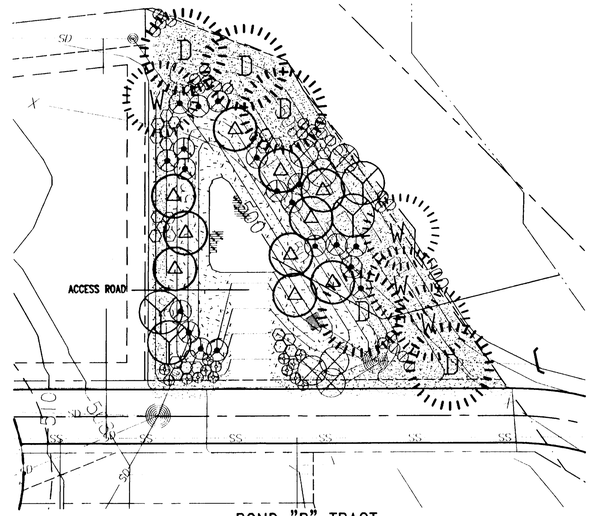

POND "B" TRACT

0' 10' 20' 40'

PLANTING NOTES:

1. ALL WORK/MAINTENANCE SHALL BE PERFORMED BY HAND IN TRANSITION ZONES.
2. SOIL PREPARATION: PROVIDE 4" MINIMUM TOPSOIL IN ALL PLANTING AREAS WHERE SLOPES AND EXISTING SOIL TEXTURES WILL HOLD THE SOIL. PROVIDE TOPSOIL FOR BACKFILL IN ALL PLANTING POCKETS. MAY BE LIMITED PLANTING POCKETS IN AREAS THAT ARE TOO STEEP OR UNSTABLE TO HOLD BLANKET TOPSOIL.
3. PROVIDE HEALTHY PLANT MATERIAL, CONSISTENT WITH QUALITY DEFINITIONS, GRADING TOLERANCES AND CALIPER TO HEIGHT RATIOS. NO LESS THAN MINIMUMS AS SPECIFIED IN "AMERICAN STANDARDS OF NURSERY STOCK". ANZI Z60.I-1973, SPECIES SIZE AND QUANTITIES SPECIFIED PER PLAN.
4. LOCATE SPACE AND GROUP PLANTS IN FIELD AS DIRECTED BY OWNER'S REPRESENTATIVE AND AS INDICATED PER PLAN.
5. IRRIGATION TO BE PROVIDED AS NEEDED BY OWNER FOR FIRST GROWING SEASON/SUMMER. PLANT MATERIAL WITHIN T-ZONES/OPEN SPACE RESOURCE AREAS THAT DO NOT HAVE ACCESS TO WATER SUPPLY ARE TO BE IRRIGATED BY HAND.
6. PLANT OR INSTALL MATERIAL DURING NORMAL PLANTING SEASONS FOR EACH TYPE OF PLANTING REQUIRED.

TEMPORARY IRRIGATION

1. A TEMPORARY IRRIGATION PLAN SHALL BE DEVELOPED TO INSURE PLANT SURVIVAL. THE IRRIGATION PLAN MAY BE A TEMPORARY IRRIGATION SYSTEM INSTALLED ON SITE OR A PLAN IDENTIFYING AN OFF-SITE WATER DELIVERY SOURCE WHICH WILL DELIVER WATER TO THE SITE AND DISTRIBUTE WATER TO ALL PLANTS.
2. TEMPORARY IRRIGATION IS TO BE PROVIDED TO ALL PLANTINGS AT RATES SPECIFIC TO THEIR REQUIREMENTS. TEMPORARY IRRIGATION IS TO MEET ALL CITY STANDARDS FOR IRRIGATION SYSTEMS INCLUDING THOSE STANDARDS FOR BACK FLOW PREVENTION.
3. TEMPORARY IRRIGATION IS TO SUPPORT PLANTS UNTIL THEY ARE ESTABLISHED AND WILL SURVIVE ON THEIR OWN, OR FOR A MINIMUM OF TWO YEARS. OWNER WILL BE NOTIFIED WHEN PLANTINGS ARE ESTABLISHED AND NO LONGER NEED SUPPLEMENTAL IRRIGATION. UPON ACCEPTANCE BY OWNER, THE ON-SITE TEMPORARY IRRIGATION SYSTEM SHALL BE REMOVED COMPLETELY, AND THE GROUND SURFACE RETURNED TO A FINE GRADED, SMOOTH AREA, BLENDING IN AND CONTINUING THE ESTABLISHED SLOPE.
4. TEMPORARY IRRIGATION SHALL BE EVALUATED REGULARLY TO INSURE THAT PLANTS ARE RECEIVING AN ADEQUATE AMOUNT OF WATER. PARTICULAR ATTENTION SHALL BE GIVEN TO SLOPED AREAS TO INSURE ADEQUATE IRRIGATION WITHOUT SATURATING THE SOIL AND CAUSING SOIL SLIPPAGE. ANY SLIPPAGE SHOULD BE REPAIRED PROMPTLY AND IRRIGATION RATES ADJUSTED ACCORDINGLY.

PLANT MATERIAL LEGEND (POND "A")

EVERGREEN TREES	NAME	SIZE AT PLANTING		CONDITION	QUANTITY
D	PSEUDOTSUGA MENZIESII DOUGLAS FIR	6' HEIGHT	70 m	B & B	6
W	ACER MACROPHYLLUM WESTERN RED CEDAR	6' HEIGHT	60 m	B & B	4
					10 TOTAL
DECIDUOUS TREES					
	BLACK HAWTHORN CRATAEGUS DOUGLASII VAR. DOUGLASII	6' HEIGHT	14 m	B & B	3
	SCOULER WILLOW SALIX SCOULERIANA	3 BRANCHES 36" HEIGHT	1-8 m	CONT.	6
					14 TOTAL
SHRUBS					
	SAMBUCUS RACEMOSA/ RED ELDERBERRY	2 GALLON	6 m	CONT.	13
	CORNUS SERICEA SSP. SERICEA (F. STOLONIFERA)/ RED-OSIER DOGWOOD	3 BRANCHES 24" HEIGHT	1-6 m	CONT.	17
	ROSA NUTKANA VAR. NUTKANA/ NOOTKA ROSE	3 CANES 24" HEIGHT	3 m	CONT.	18
	BERBERIS AQUIFOLIUM/ OREGON GRAPE	24" HEIGHT	60 cm	CONT.	24
	SPIRAEA DOUGLASII/ DOUGLAS' SPIREA	24" HEIGHT	2 m	CONT.	18
					94 TOTAL
EMERGENTS					
	SCIRPUS MICROCARPUS/ SMALL FRUITED BULRUSH	4" DIA. CLUMP WITH FULL FOLIAGE	1-3 m	RHIZOME	355
	CAREX OBNUPTA/ SLOUGH SEDGE	4" DIA. CLUMP WITH FULL FOLIAGE	1-3 m	RHIZOME	173
	JUNCUS EFFUSUS/ COMMON RUSH	4" DIA. CLUMP WITH FULL FOLIAGE	1-3 m	RHIZOME	267
					795 TOTAL

NATIVE GRASS SEED MIX

PRO-TIME 400 NATIVE GRASS SEED MIX - AREA=4,750 S.F.

NATIVE CALIFORNIA BROME	10%
BLUE WILDRYE/ELYMUS GLAUCUS	60%
WESTERN FESCUE-GRASS/FESTUCA OCCIDENTALIS	20%
MEADOW BARLEY/HORDEUM BRACHYANTHERUM	10%
	20LBS PER ACRE

PRO-TIME 502 WETLAND SEED MIX - AREA=1,580 S.F.

RED TOP BENTGRASS	10%
ELKA PERENNIAL RYE GRASS	20%
AU DEWEY BIRDSFOOT TREFOIL	20%
MOZARK TALL FESCUE	20%
SLENDER WHEAT GRASS	30%
	20LBS PER ACRE

STOCKPILE AREA = 490 S.F.

PLANT MATERIAL LEGEND (POND "B")

EVERGREEN TREES	NAME	SIZE AT PLANTING	SIZE IN 30 YRS.	CONDITION	QUANTITY
D	PSEUDOTSUGA MENZIESII DOUGLAS FIR	6' HEIGHT	70 m	B & B	5
W	ACER MACROPHYLLUM WESTERN RED CEDAR	6' HEIGHT	60 m	B & B	4
					9 TOTAL
DECIDUOUS TREES					
	BLACK HAWTHORN CRATAEGUS DOUGLASII VAR. DOUGLASII	6' HEIGHT	14 m	B & B	4
	SCOULER WILLOW SALIX SCOULERIANA	3 BRANCHES 36" HEIGHT	1-8 m	CONT.	10
					14 TOTAL
SHRUBS					
	SAMBUCUS RACEMOSA/ RED ELDERBERRY	2 GALLON	6 m	CONT.	6
	CORNUS SERICEA SSP. SERICEA (F. STOLONIFERA)/ RED-OSIER DOGWOOD	3 BRANCHES 24" HEIGHT	1-6 m	CONT.	19
	ROSA NUTKANA VAR. NUTKANA/ NOOTKA ROSE	3 CANES 24" HEIGHT	3 m	CONT.	14
	BERBERIS AQUIFOLIUM/ OREGON GRAPE	24" HEIGHT	60 cm	CONT.	25
	SPIRAEA DOUGLASII/ DOUGLAS' SPIREA	24" HEIGHT	2 m	CONT.	27
					91 TOTAL
EMERGENTS					
	CAREX OBNUPTA/ SLOUGH SEDGE	4" DIA. RHIZOME CLUMP WITH FULL FOLIAGE	1-3 m	RHIZOME	166

NATIVE GRASS SEED MIX

PRO-TIME 400 NATIVE GRASS SEED MIX - AREA=3,800 S.F.

NATIVE CALIFORNIA BROME	10%
BLUE WILDRYE/ELYMUS GLAUCUS	60%
WESTERN FESCUE-GRASS/FESTUCA OCCIDENTALIS	20%
MEADOW BARLEY/HORDEUM BRACHYANTHERUM	10%
	20LBS PER ACRE

PRO-TIME 502 WETLAND SEED MIX - AREA=2,530 S.F.

RED TOP BENTGRASS	10%
ELKA PERENNIAL RYE GRASS	20%
AU DEWEY BIRDSFOOT TREFOIL	20%
MOZARK TALL FESCUE	20%
SLENDER WHEAT GRASS	30%
	20LBS PER ACRE

STOCKPILE AREA = 565 S.F.

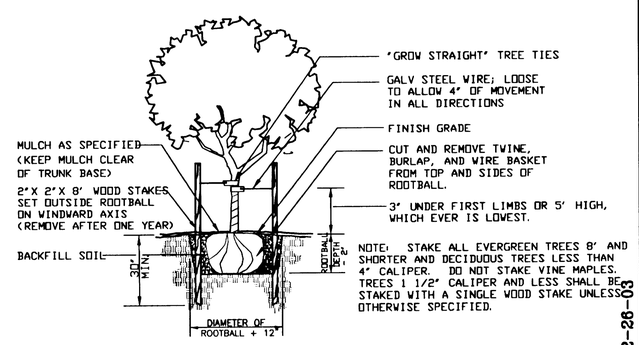

NOTE: STAKE ALL EVERGREEN TREES 8' AND SHORTER AND DECIDUOUS TREES LESS THAN 4" CALIPER. DO NOT STAKE VINE MAPLES. TREES 1 1/2" CALIPER AND LESS SHALL BE STAKED WITH A SINGLE WOOD STAKE UNLESS OTHERWISE SPECIFIED.

1 TREE STAKING DETAIL
NOT TO SCALE

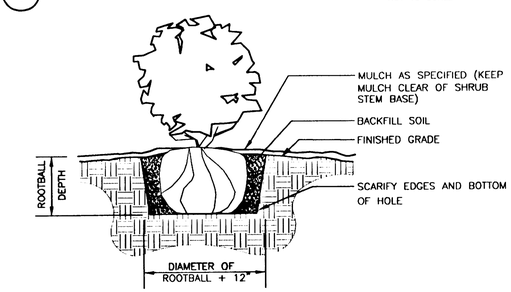

2 SHRUB PLANTING DETAIL
NOT TO SCALE

ASBUILT SUBMITTAL TO CITY OF WEST LINN 02-28-03

06/14/02
Date
LMB
Designed
LMB
Drawn
KEL 9-10-01
Checked By Date

CENTEX HOMES
AMERICA'S #1 HOMBUILDER
16520 SW Upper Boones Ferry Road, Suite #200
Portland, OR 97224
Phone: (503) 608-3060
Fax: (503) 608-3061

Rogerfield Phase II-52 Lots

CITY OF WEST LINN, OREGON
STORM WATER DETENTION FACILITY A
PLANTING PLANS FOR
POND "A" AND POND "B"

otak Incorporated
17355 SW Boones Perry Road
Lake Oswego, OR 97035-5217
Phone: (503) 635-3618
FAX: (503) 635-5395

10822
Project No.
L822P002
File No.
C7.1
Sheet No.

Copyright 2002 ©

I:\SHANNON\02/26/03-10:33am ==> R:\DWG\L822P002.DWG

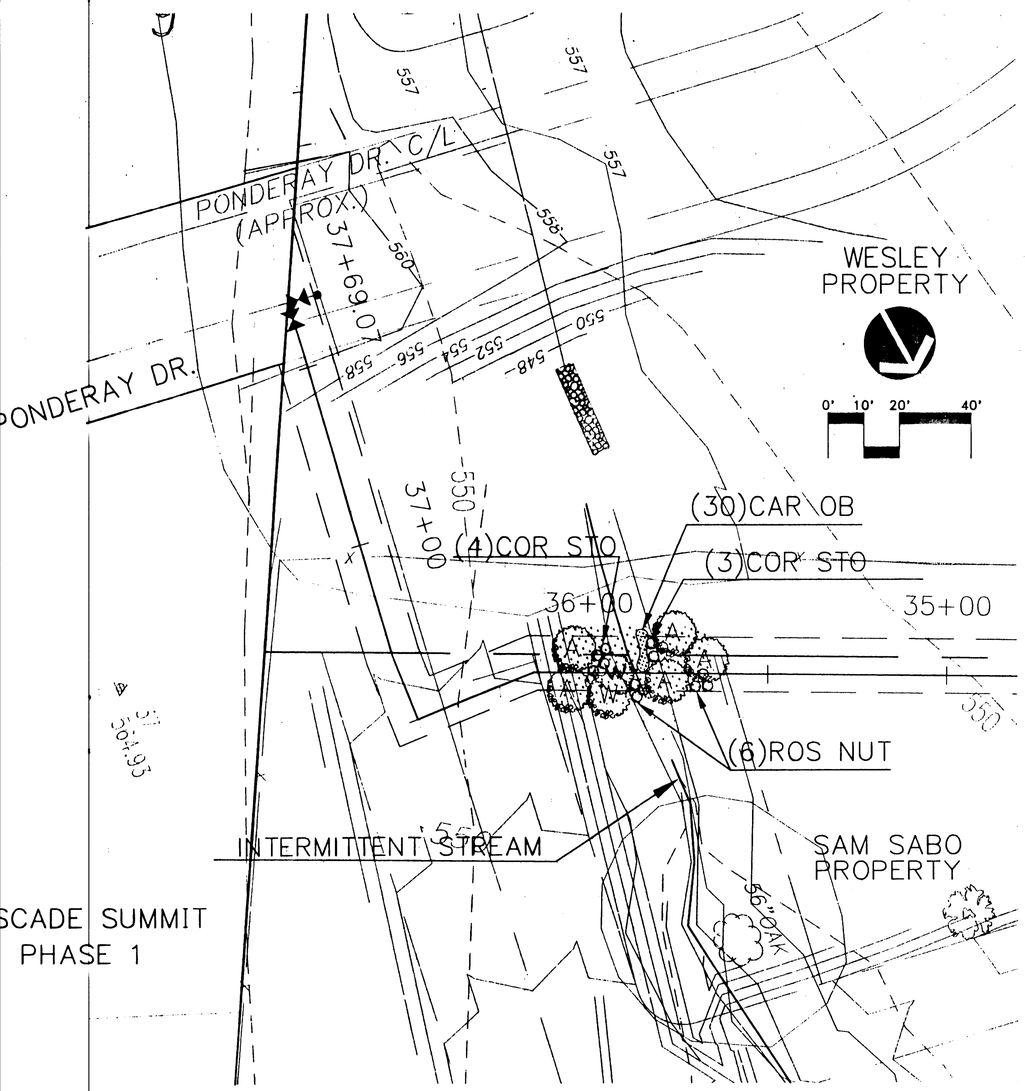

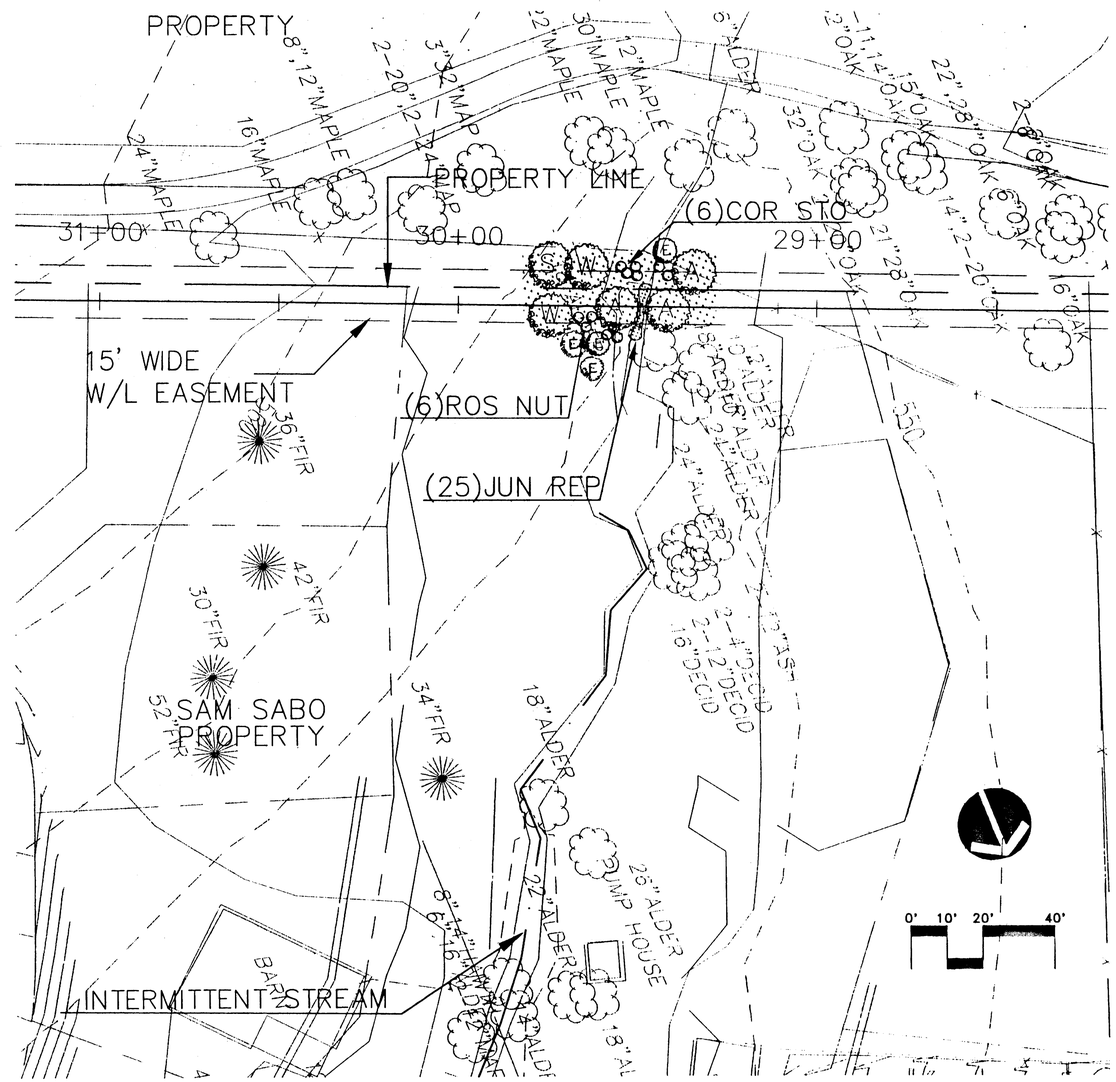

PLANT LIST

SYMBOL	COMMON/BOTANICAL NAME	SIZE
TREES:		
(A)	RED ALDER/ULNUS RUBRA	1" CALIPER
(E)	RED ELDERBERRY/SAMBUCUS RACEMOSA	24" TO 30"
(S)	WESTERN SERVICEBERRY/AMELANCHIER FLORIDA	3/4" CALIPER
(W)	PACIFIC WILLOW/SALIX LASIANDRA	1" CALIPER
SHRUBS:		
COR STO	RED OSIER DOGWOOD/CORNUS STOLONIFERA	15" TO 18"
ROS NUT	NOOTKA ROSE/ROSA NUTKANA	15" TO 18"
GRASSES:		
	1. CREEPING BENTGRASS/AGROSTIS STOLONIFERA	5 LBS/ACRE
	2. TALL FESQUE/FESTUCA ARUNDINACEA	5 LBS/ACRE
EMERGENTS:		
CAR OBN	SLOUGH SEDGE/CAREX OBNUPTA	
JUN REP	JUNCUS REPENDS	

ASBUILT SUBMITTAL 2-26-03
REVISED 12-14-01 SRS

KEL - 5-7-98
Checked By Date

REGISTERED 369 Karen E. Lankford OREGON 5/09/97 LANDSCAPE ARCHITECT

KOSS BROD & GOODRICH ASSOCIATES
MAILING: 19363 WILLAMETTE DRIVE, #509
WEST LINN, OREGON 97068
PHONE: (503)-635-7944
FAX: (503)-557-5677

PARKER RD WATERLINE

CITY OF WEST LINN - OREGON

CREEK CROSSING
LANDSCAPE PLAN
REF. COA #44

otak Incorporated
17355 SW Boones Ferry Rd.
Lake Oswego, Oregon 97035
Phone: (503) 635-3618
FAX: (503) 635-5395

10822
9160
Project No.
D160SL01
File No. C7.3
1 OF 1
Sheet No.

XREF_LIST
Ltscale: 1
Resolved
D822X005

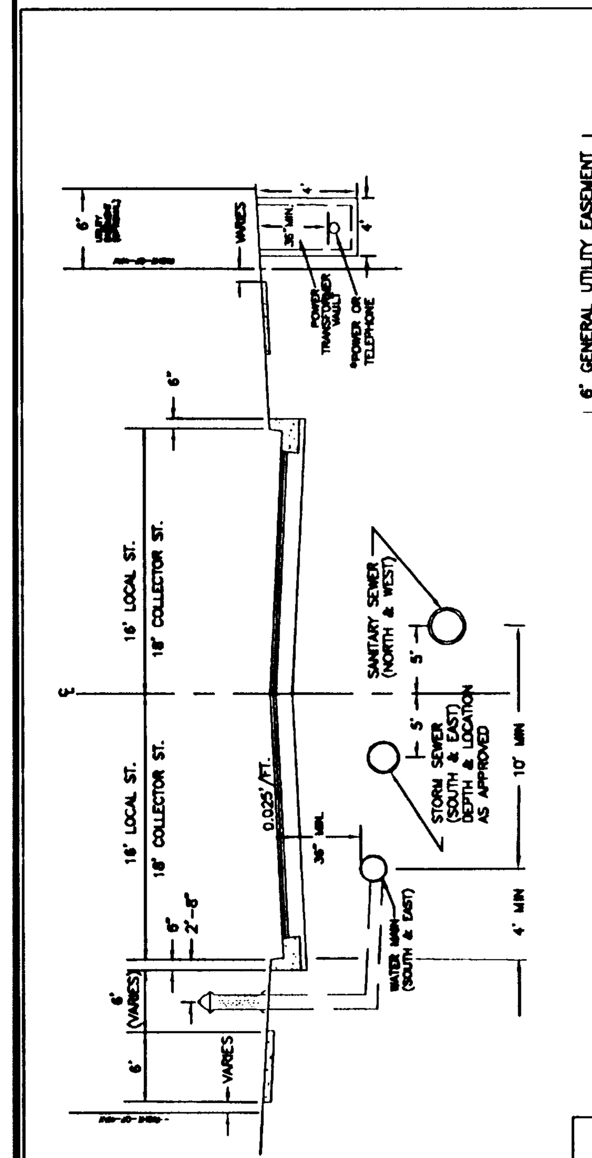

*NOTE: IF SIX FOOT UTILITY EASEMENT IS PRESENT ALONG PROPERTY FRONTAGE PLACEMENT SHALL BE AT BACK OF SIDEWALK WITHIN UTILITY EASEMENT.

1. ON STREETS LESS THAN 18' IN WIDTH REFER TO DETAIL WL-408, FOR WATERLINE SANITARY SEWER LINE SEPARATION.
2. STORM DRAINAGE LINES ON ALL STREETS SHALL BE 5' SOUTH & EAST OF CENTER LINE. WHERE DESIGN CONSTRAINTS WILL NOT ALLOW PLACEMENT OF STORM LINE SURFACE DRAINAGE IS RECOMMENDED.
3. FIRE HYDRANTS ARE TO BE LOCATED OUTSIDE THE R.O.W. IN A 5' BY 5' EASEMENT ON ALLEY, LOCAL LANE, MINOR ACCESS, & QUEUING STREETS.

Typical Utility Placement Detail

West Linn | DATE: JAN 2000 | DRAWING NO. WL-500 | FILE NO. 00-500

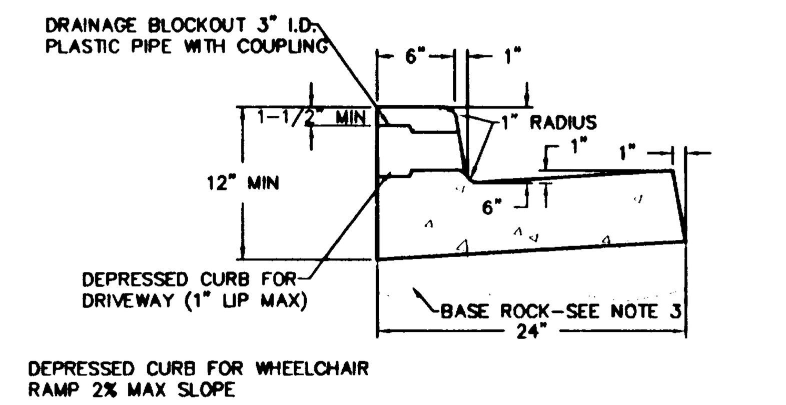

TYPICAL CURB & GUTTER

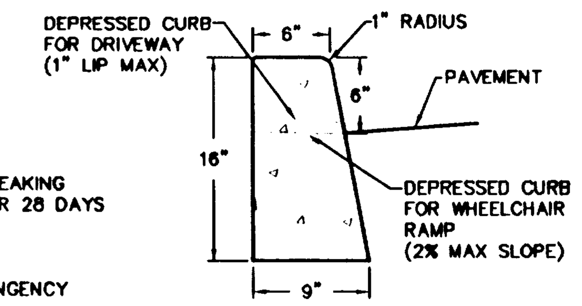

TYPICAL STRAIGHT CURB

NOTES:
1. CONCRETE SHALL HAVE A BREAKING STRENGTH OF 3300 PSI AFTER 28 DAYS
2. CONTRACTION JOINTS
   A) TO BE PROVIDED
      -AT EACH POINT OF TANGENCY
      -AT EACH COLD JOINT
      -AT EACH SIDE OF INLET STRUCTURES
      -AT BOTH SIDES OF AN APPROACH
   B) SPACING TO BE NOT MORE THAN 15 FEET
   C) THE DEPTH OF THE JOINT SHALL BE AT LEAST 1/3 OF THE THICKNESS OF CONCRETE
   D) EXPANSION JOINTS SHALL NOT BE USED
3. BASE ROCK – 1-1/2"-0", 95% COMPACTION ROCK SHALL BE TO SUBGRADE OF THE STREET SECTION OR 4" IN DEPTH, WHICHEVER IS GREATER
4. DRAINAGE BLOCK – 3" DIA. PLASTIC PIPE
   A) DRAINAGE ACCESS THROUGH EXISTING CURBS SHALL BE DONE BY:
      -CORE DRILLING
      -VERTICAL SAWCUT OF CURB 18" EACH SIDE OF DRAIN AND RE-POURED TO FULL DEPTH OF CURB
5. STAMP TOP OF CURB WITH "W" AT WATER SERVICE CROSSING AND "S" AT SANITARY LATERAL CROSSING

Typical Curbs

West Linn | DATE: JAN 2000 | DRAWING NO. WL-501 | FILE NO. 00-501

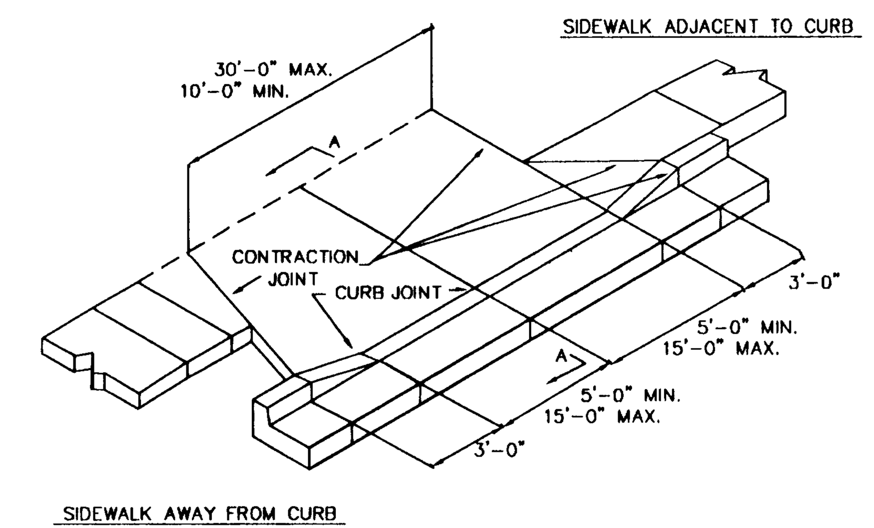

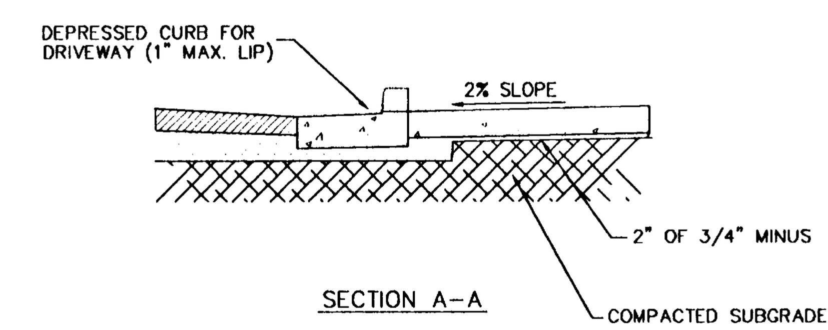

SECTION A–A

NOTES
1. CONCRETE SHALL HAVE A MINIMUM BREAKING STRENGTH OF 3300 PSI AFTER 28 DAYS, 6 SACK MIX.
2. CURB SHALL BE TROWELED JOINT WITH A MIN. 1/2" RADIUS ALONG BACK OF CURB.
3. DRIVEWAY SHALL BE A MINIMUM 6" THICK.

Residential Driveway

West Linn | DATE: JAN 2000 | DRAWING NO. WL-503 | FILE NO. 00-503

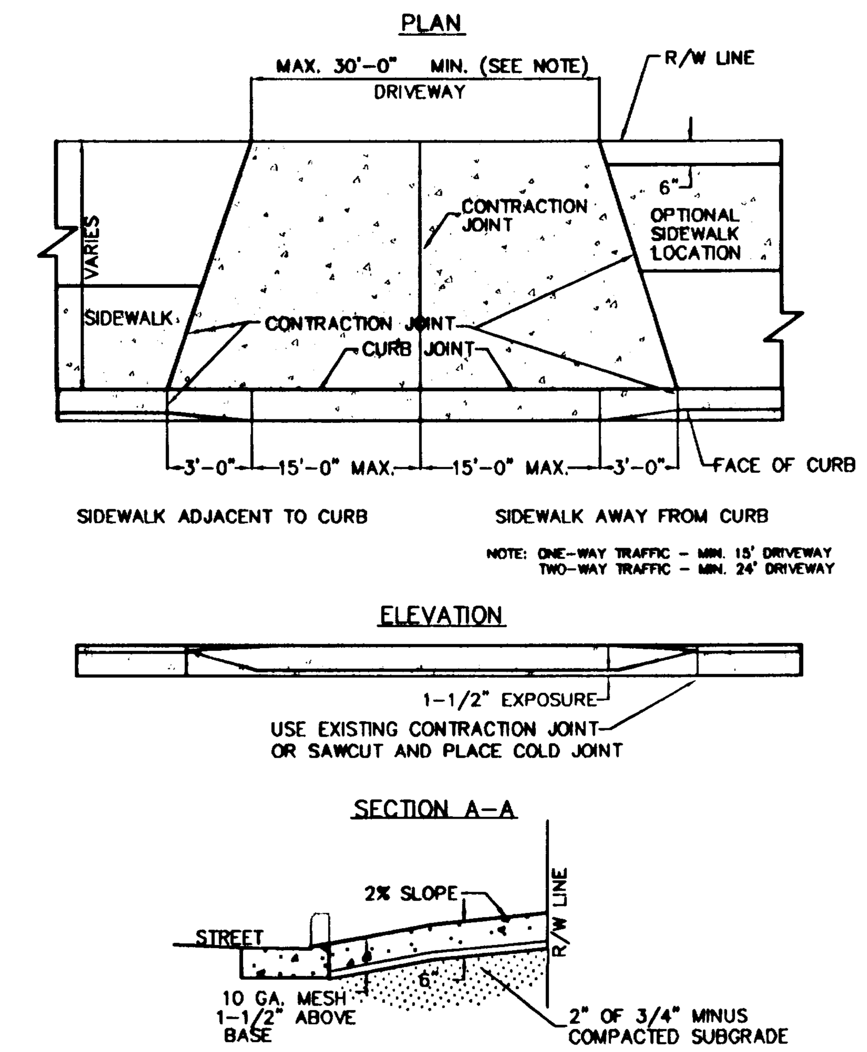

NOTES
1. CONCRETE SHALL HAVE A MINIMUM BREAKING STRENGTH OF 3300 PSI AFTER 28 DAYS, 6 SACK MIX.
2. CURB JOINT SHALL BE A TROWELED JOINT WITH A MIN. 1/2" RADIUS ALONG BACK OF CURB.
3. DRIVEWAY SHALL BE A MINIMUM 6" THICK.

Commercial Driveway

West Linn | DATE: JAN 2000 | DRAWING NO. WL-504 | FILE NO. 00-504

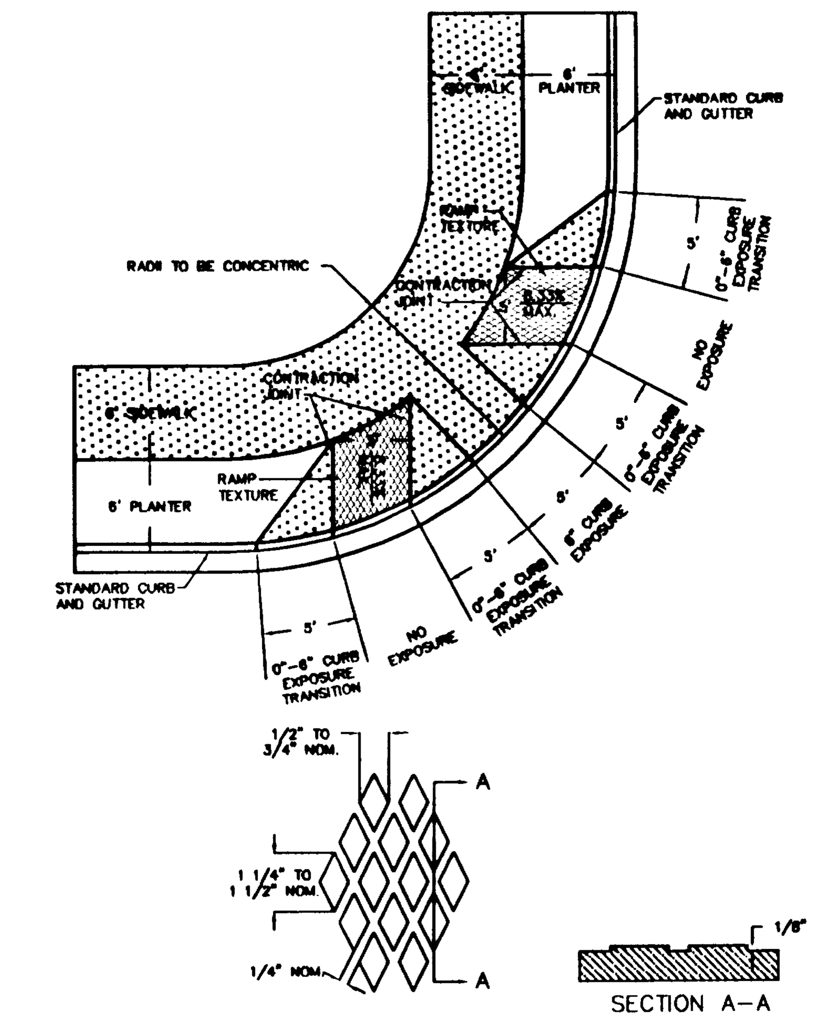

RAMP TEXTURE DETAIL

NOTES:
1. THE "AMERICANS WITH DISABILITIES ACT" (ADA) REQUIRES THAT ACCESS RAMPS TO SIDEWALKS CONFORM TO ALL FEDERAL GUIDE-LINES. EXCEPTIONS TO THE REQUIREMENTS IN THIS DRAWING MUST BE APPROVED BY THE CITY ENGINEER.
2. NO ABOVE GROUND UTILITIES ADRE PERMITTED WITHIN RAMP AREA.
3. RAMP SURFACE SHALL BE TEXTURED WITH RAISED DIAMOND TEXTURE. TEXTURING SHALL BE DONE WITH AN EXPANDED METAL GRATE STAMPED INTO THE CONCRETE.
4. CONCRETE STRENGTH SHALL BE 3300 PSI.
5. PLACE CONTRACTION JOINTS AS SHOWN ABOVE.
6. FOR INTERSECTING LOCAL STREETS USE DETAIL WL-507A.

Twin Curb Ramp

West Linn | DATE: JAN 2000 | DRAWING NO. WL-507B | FILE NO. 00-507B

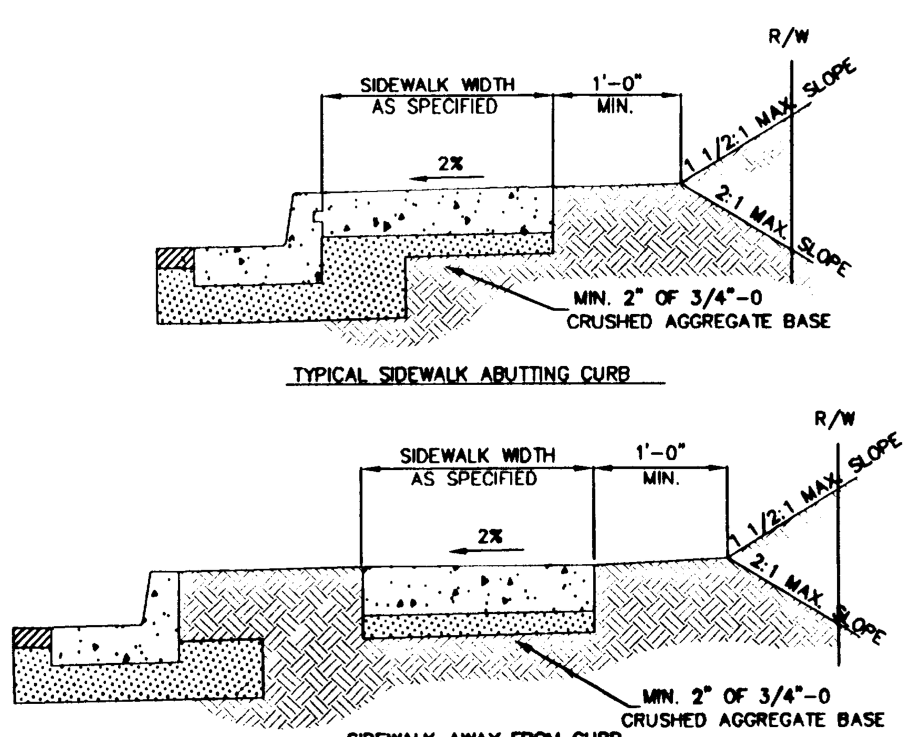

NOTES
1. CONCRETE SHALL BE 3300 PSI AT 28 DAYS, 6 SACK MIX, SLUMP RANGE OF 1 1/2" TO 3".
2. PANEL LENGTHS SHALL BE EQUAL TO THE SIDEWALK WIDTH, BUT MAY BE ADJUSTED WITH THE CITY ENGINEER'S APPROVAL.
3. CONTRACTION JOINTS (1/3RD OF THE THICKNESS OF CONCRETE) SHALL BE PLACED EVERY THIRD PANEL, WITH A MAX. SPACING OF 18 FEET. JOINTS SHALL ALSO BE PLACED AT THE SIDES OF DRIVEWAY APPROACHES, UTILITY VAULTS, AND WHEELCHAIR RAMPS.
4. A CURING COMPOUND SHALL BE USED. WHITE REFLECTIVE SHEETING SHALL BE USED IN CASE OF RAIN.
5. FOR SIDEWALKS ADJACENT TO THE CURB AND POURED AT THE SAME TIME AS THE CURB, THE JOINT BETWEEN THEM SHALL BE A TROWELED JOINT WITH A MIN. 1/2" RADIUS.
6. THE SIDEWALK SHALL HAVE A MIN. THICKNESS OF 6" IF MOUNTABLE CURB IS USED OR IF THE SIDEWALK IS INTENDED AS A PORTION OF THE DRIVEWAY. OTHERWISE, THE SIDEWALK SHALL HAVE A MIN. THICKNESS OF 4".
7. DRAIN BLOCKOUTS IN THE CURB SHALL BE EXTENDED TO THE BACK OF THE SIDEWALK WITH A 3" DIA. PLASTIC PIPE AT A 2% SLOPE. A CONTRACTION JOINT SHALL BE PLACED OVER THE PIPE.

Concrete Sidewalk Cross Section

West Linn | DATE: JAN 2000 | DRAWING NO. WL-508 | FILE NO. 00-508

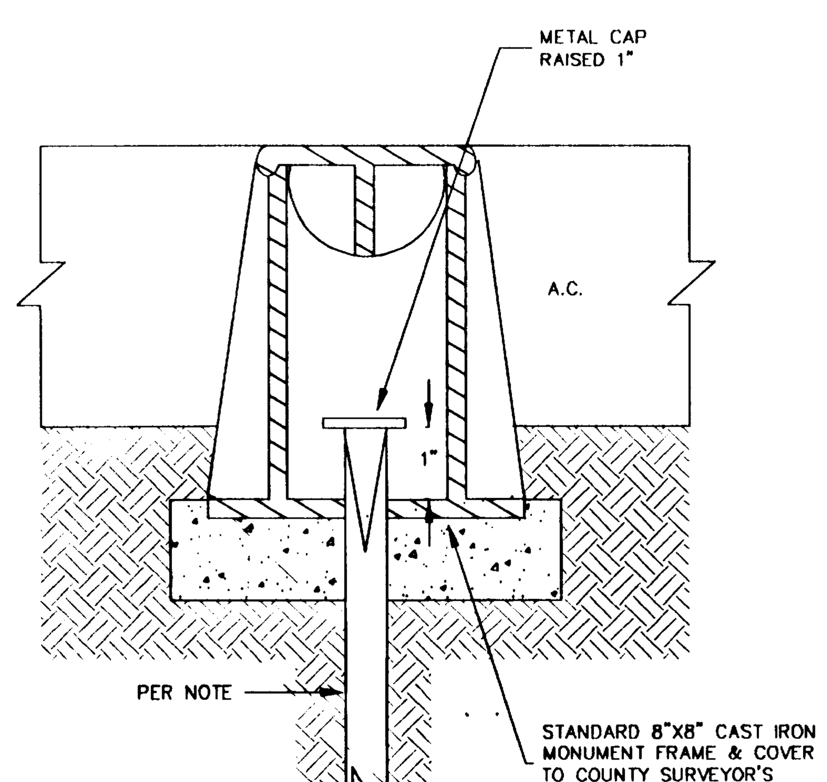

NOTES: ALL MONUMENTS SHALL USE EITHER 5/8" DIA.X 30" LONG IRON ROD OR 3/4" DIA.X 30" LONG IRON PIPE.

ALL MONUMENTS SHALL BE IN ACCORDANCE WITH ORS 209.250(4).

CONCRETE SHALL BE CLASS 3300.

FRAME AND COVER SHALL BE CAST IRON OR ALUMINUM.

COVER SHALL HAVE "MONUMENT" CAST INTO TOP.

Centerline Survey Monuments

West Linn | DATE: JAN 2000 | DRAWING NO. WL-513 | FILE NO. 00-513

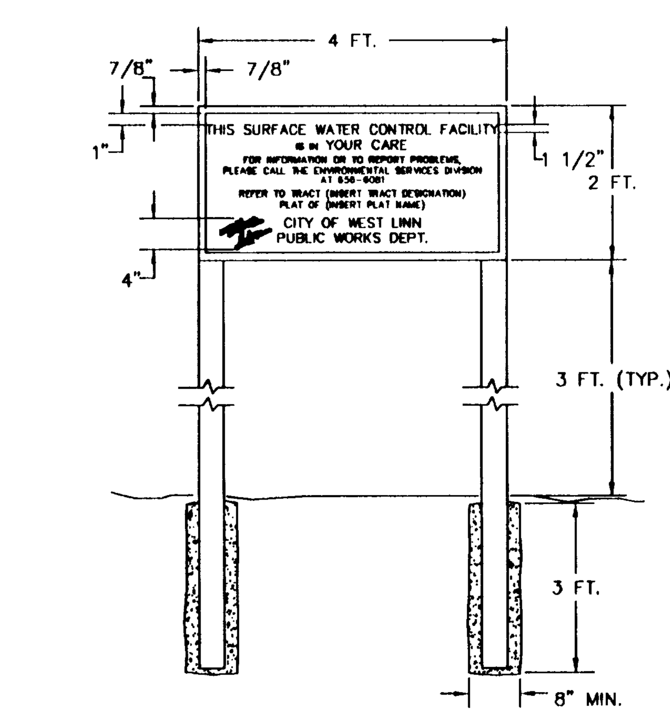

SPECIFICATIONS:
SIZE: 48" BY 24"
MATERIAL: GRADE "B" OR BETTER EXTERIOR PLYWOOD
PAINT: FACE – 3 COATS OUTDOOR ENAMEL (SPRAYED).
BACK – 1 COAT OUTDOOR ENAMEL (SPRAYED).
LETTERING: SILK SCREEN ENAMEL WHERE POSSIBLE, OR HAND PAINTED ENAMELS.
COLORS: BLACK AND WHITE. WHITE BACKGROUND, LETTERING AND BORDER IN BLACK
TYPE FACE: HELVETICA. 1 1/2" TALL WITH 7/8" SPACING BETWEEN LETTERS AND OUTER BORDER. OUTER BORDER 1/2" WIDTH
INSTALLATION: SECURED TO CHAIN LINK FENCE IF AVAILABLE, OTHERWISE INSTALL ON TWO 8 FT. LONG 4" X 4" POSTS, PRESSURE TREATED, INSTALLED IN 3 FT. DEEP CONCRETE FILLED POST HOLES (8" MIN. DIA.)

Surface Water Facility Sign

West Linn | DATE: JAN 2000 | DRAWING NO. WL-615 | FILE NO. 00-615

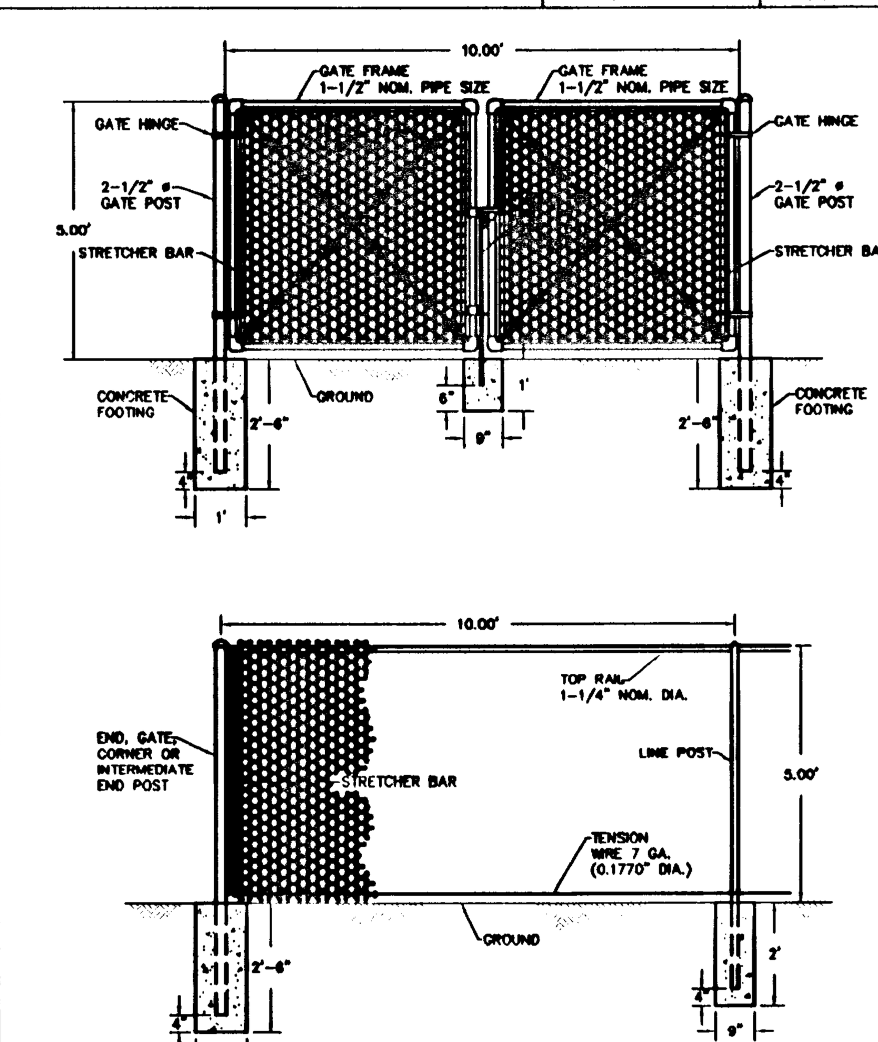

NOTES:
1. BLACK POWDER COATING ON ALL HARDWARE AND ACCESSORIES IS REQUIRED.
2. ALL MATERIAL AND WORKMANSHIP SHALL BE IN ACCORDANCE WITH THE CURRENT STATE OF OREGON STANDARD SPECIFICATIONS FOR HIGHWAY CONSTRUCTION.

Surface Water Facility Fence

West Linn | DATE: JAN 2000 | DRAWING NO. WL-616 | FILE NO. 00-616

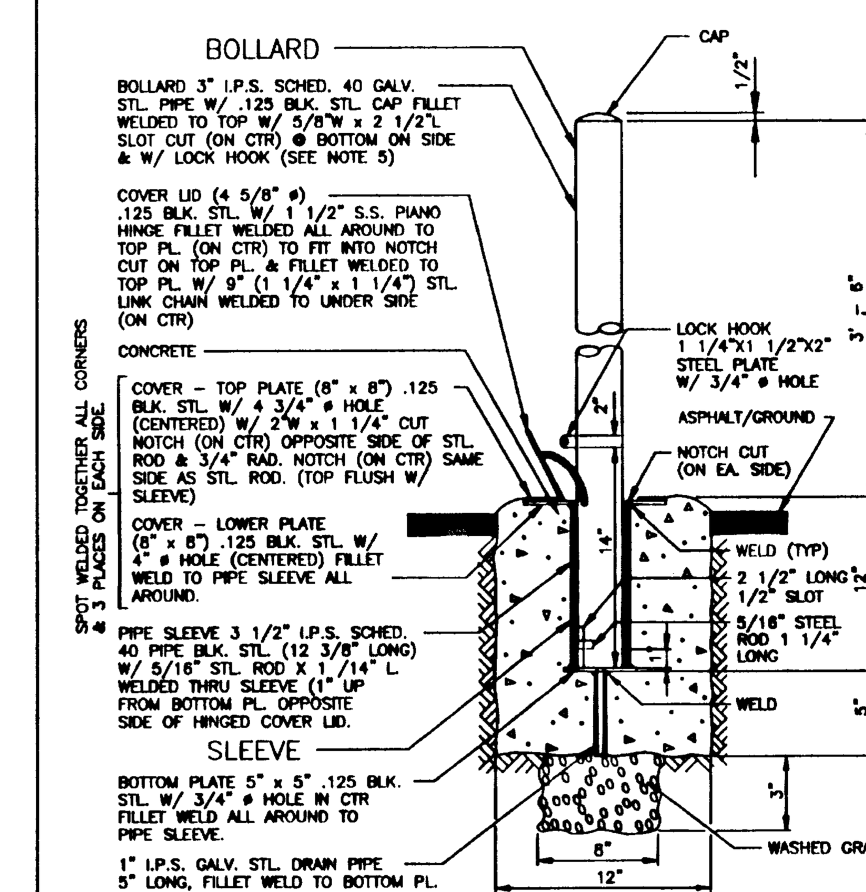

NOTES:

1. HOT-DIP GALVANIZE ALL STEEL PARTS AFTER FABRICATION IN ACCORDANCE WITH ASTM A123-59 OR ENTIRE SLEEVE ASSEMBLY CAN BE PAINTED (SEE NOTE 4)

2. MIN. ULTIMATE 28 DAYS COMPRESSIVE STRENGTH OF CONCRETE 2,500 PSI

3. BOLLARD AND SLEEVE TO BE PRIMED AND PAINTED "TRAFFIC YELLOW" COLOR EXTERIOR ENAMEL

(1 / C8.0) **REMOVABLE BOLLARD**
NTS

ASBUILT SUBMITTAL TO CITY OF WEST LINN 02-28-03

Date: 06/14/02
Designed: SAS
Drawn: KM, TR, SR
Checked By Date: SAS 2-26-03

CENTEX HOMES
AMERICA'S HOMEBUILDER
16520 SW Upper Boones Ferry Road, Suite #200
Portland, OR 97224
Phone: (503) 608-3060
Fax: (503) 608-3061

Rogerfield Phase II-52 Lots

CITY OF WEST LINN, OREGON
STREET AND STORM DETAILS

otak Incorporated
17355 SW Boones Ferry Road
Lake Oswego, OR 97035-5217
Phone: (503) 635-3618
FAX: (503) 635-5395

Project No.: 10822
File No.: D822C80
Sheet No.: C8.0

Copyright 2002 ©

S:SHANNONM 02/25/03 9:36am ---> R:\DWG\D822C80.DWG

XREF LIST
Ltscale: 1
Resolved
D822X005

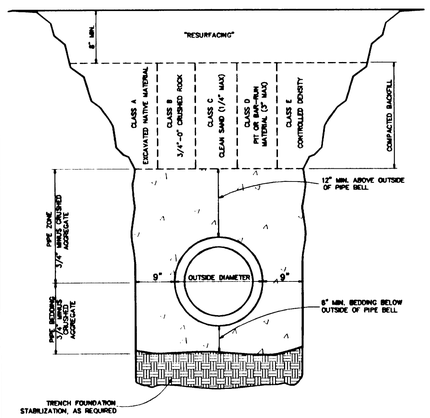

Trench Backfill, Bedding and Pipe Zone

West Linn | DATE: JAN 2000 | DRAWING NO. WL-200 | FILE NO. 00-200

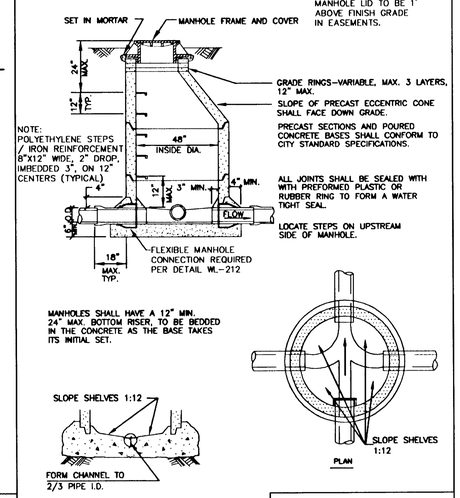

NOTE: CHANNELS MUST BE ABLE TO PASS A 7"X30" CYLINDER INTO PIPES. SHELF SHALL NOT BE BELOW THE TOP OF THE PIPE.

Standard Manhole for Less than 36" Pipe

West Linn | DATE: JAN 2000 | DRAWING NO. WL-207 | FILE NO. 00-207

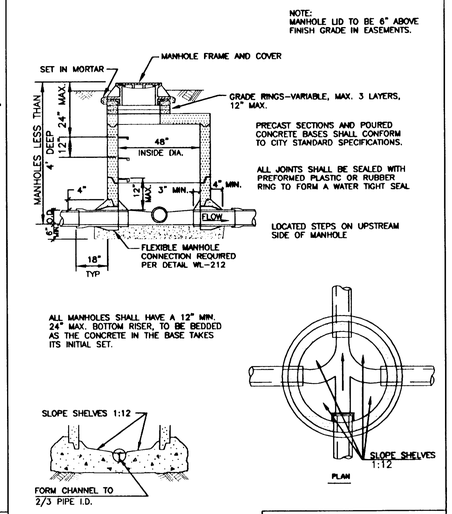

NOTE: CHANNELS MUST BE ABLE TO PASS A 7"X30" CYLINDER INTO PIPES. SHELF SHALL NOT BE BELOW SPRING LINE OF THE PIPE.

Shallow Manhole for Less than 36" Pipe

West Linn | DATE: JAN 2000 | DRAWING NO. WL-208 | FILE NO. 00-208

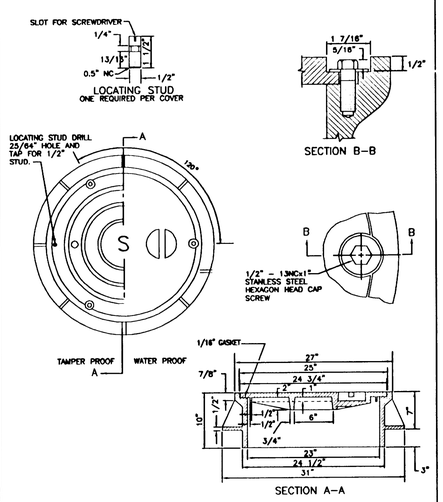

NOTES:
1. COVER AND FRAME TO BE MACHINED TO A TRUE BEARING ALL AROUND.
2. MATERIAL SHALL BE OF GRAY CAST IRON A.S.T.M. A-48 CLASS 30.
3. 2 HOLE LID FOR SANITARY SEWER
4. 16 HOLE LID FOR STORM SEWER

Waterproof and Tamperproof Manhole Frame and Cover

West Linn | DATE: JAN 2000 | DRAWING NO. WL-214 | FILE NO. 00-214

NOTES:
1. COVER AND FRAME TO BE MACHINED FOR TRUE BEARING.
2. MATERIAL SHALL BE GRAY CAST IRON A.S.T.M. A-48 CLASS 30.
3. TWO HOLE LID FOR SANITARY SEWER.
4. 16 HOLE LID FOR STORM SEWER.

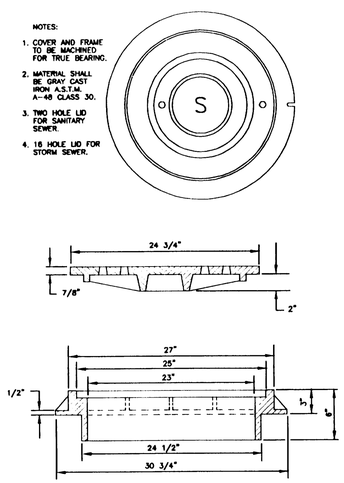

Suburban Manhole Frame and Cover 3" Depth

West Linn | DATE: JAN 2000 | DRAWING NO. WL-300 | FILE NO. 00-300

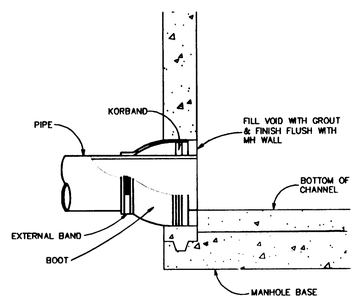

FLEXIBLE MANHOLE CONNECTION
(KOR-N-SEAL OR EQUAL)

Flexible Manhole Connection

West Linn | DATE: JAN 2000 | DRAWING NO. WL-212 | FILE NO. 00-212

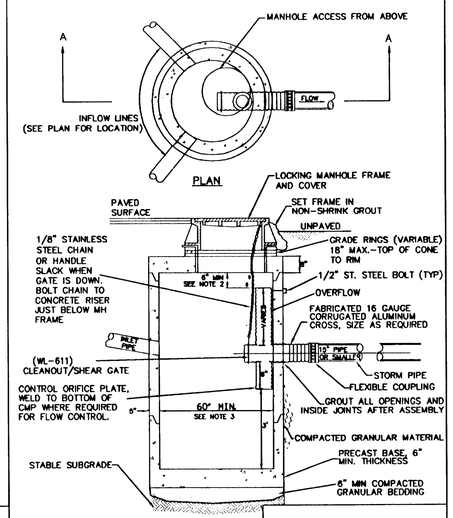

NOTES:
1. ALL PRECAST SECTIONS SHALL CONFORM TO THE REQUIREMENTS OF ASTM C-478.
2. DISTANCE FROM TOP OF OVERFLOW TO MH RIM SHALL BE BASED ON OVERFLOW CAPACITY CALC'S BY DESIGN ENGINEER. ASSUME ORIFICE CONTROL.
3. 72" MINIMUM DIA. MANHOLE REQUIRED FOR OUTLET OR INLET > 21".
4. NO STEPS REQUIRED

Pollution / Flow Control Manhole

West Linn | DATE: JAN 2000 | DRAWING NO. WL-607 | FILE NO. 00-607

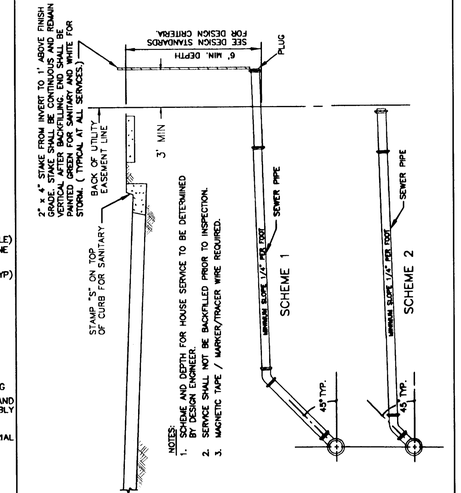

NOTES:
1. SCHEME AND DEPTH FOR HOUSE SERVICE TO BE DETERMINED BY DESIGN ENGINEER.
2. SERVICE SHALL NOT BE BACKFILLED PRIOR TO INSPECTION.
3. MAGNETIC TAPE / MARKER/TRACER WIRE REQUIRED.

Service Branch

West Linn | DATE: JAN 2000 | DRAWING NO. WL-218 | FILE NO. 00-218

06/14/02
Date
SAS
Designed
KM, TR, SR
Drawn
Checked By Date

CENTEX HOMES
AMERICA'S #1 HOMEBUILDER
16520 SW Upper Boones Ferry Road, Suite 200
Portland, OR 97224
Phone: (503) 608-3060
Fax: (503) 608-3061

Rogerfield Phase II-52 Lots

CITY OF WEST LINN, OREGON
STORM AND SANITARY DETAILS

ASBUILT SUBMITTAL TO CITY OF WEST LINN 02-26-03

otak Incorporated
17355 SW Boones Ferry Road
Lake Oswego, OR 97035-5217
Phone: (503) 635-3618
FAX: (503) 635-5395

10822
Project No.
D822C81
File No.
C8.1
Sheet No.

Copyright 2002 ©

S:\ANNOXM 02/25/03 9:37am --> R:\DWG\D822C81.DWG

XREF LIST
Ltscale: 1
Resolved
D822X005

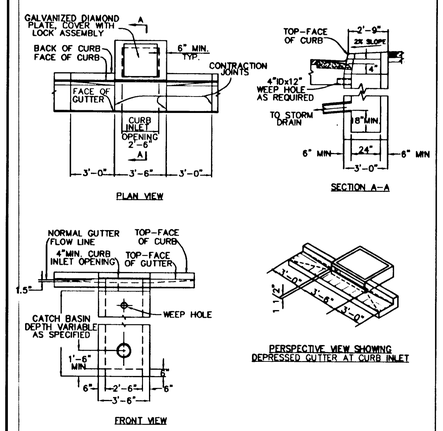

NOTES:
1. ALL FABRICATED METAL PARTS SHALL BE HOT-DIPPED GALVANIZED AFTER FABRICATION.
2. CONCRETE SHALL BE CLASS 3000.
3. CURB INLET BASE MAY BE PRECAST OR CAST-IN-PLACE.
4. FOR SLOPES OF 5% OR GREATER, USE DWG. WL-601.

Gutter Inlet
2 1/2 A

West Linn | DATE: JAN 2000 | DRAWING NO. WL-600 | FILE NO. 00-600

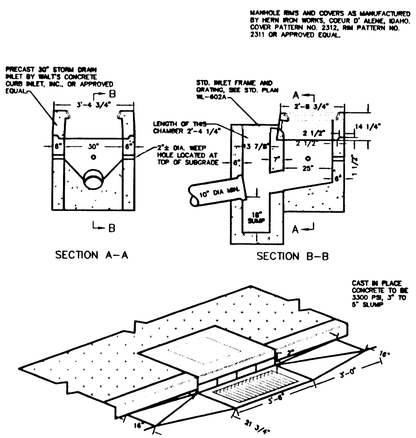

Combination Curb Inlet

West Linn | DATE: JAN 2000 | DRAWING NO. WL-601 | FILE NO. 00-601

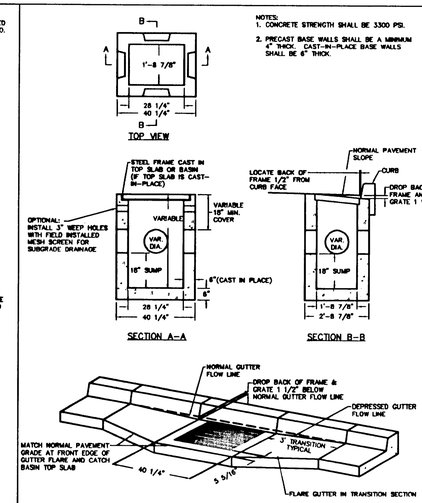

NOTES:
1. CONCRETE STRENGTH SHALL BE 3300 PSI.
2. PRECAST BASE WALLS SHALL BE A MINIMUM 4" THICK. CAST-IN-PLACE BASE WALLS SHALL BE 6" THICK.

NOTE:
PRECAST TOP SLAB SHOWN WITH GUTTER TRANSITION FLARE IF THE TOP SLAB IS CAST-IN-PLACE, NO FLARE IS REQUIRED IN THE TRANSITION SECTION: MATCH THE TOP FRONT EDGE OF THE FRAME AND THE TOP FRONT EDGE OF THE CAST-IN-PLACE TOP SLAB TO THE NORMAL PAVEMENT GRADE.

Type G-1 Catch Basin with Sump

West Linn | DATE: JAN 2000 | DRAWING NO. WL-602 | FILE NO. 00-602

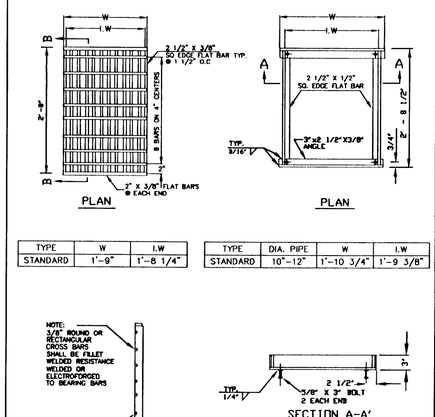

NOTE:
USE VERTICAL BEADS IN CORNERS, FILLET WELD JOINT ON BOTOM OF FRAME. GRATE MUST REST FLAT ON FRAME SURFACE.

Frame & Grate for Gutter & Curb Inlets

West Linn | DATE: JAN 2000 | DRAWING NO. WL-602A | FILE NO. 00-602A

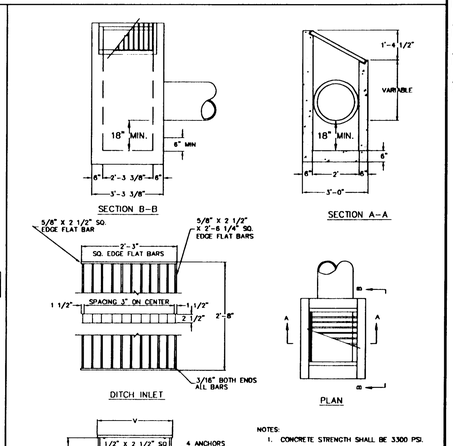

NOTES:
1. CONCRETE STRENGTH SHALL BE 3300 PSI.
2. CATCH BASIN, FRAME, AND GRATES SHALL MEET H20 LOADING.
3. INSIDE FRAME DIMENSIONS: 2'-3 3/8", 2'-8 1/2".

NOTE:
3/8" CROSS BARS SHALL BE FLUSH WITH THE GRATE SURFACE AND MAY BE FILLET WELDED, RESISTANCE WELDED OR ELECTROFORGED TO BEARING BARS.

DITCH INLET FRAME

INLET TYPE	V	Y	Y1	NO. OF BARS	TYPE
D	2'-4 3/4"	2'-3 3/8"	2'-3"	9	1

Standard Ditch Inlet

West Linn | DATE: JAN 2000 | DRAWING NO. WL-603 | FILE NO. 00-603

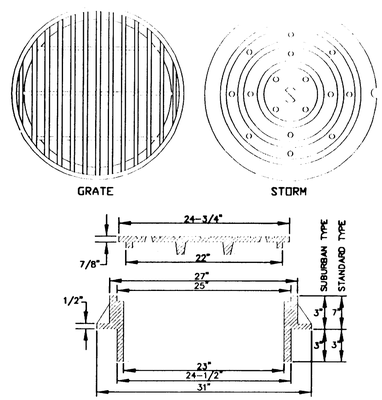

NOTES:
1. USE SUBURBAN TYPE ONLY IN NON-TRAFFIC AREAS, AND ONLY WITH APPROVAL BY THE CITY.
2. COVER AND FRAME SHALL BE GRAY CAST IRON ASTM A-48 CLASS 30.
3. COVER AND FRAME TO BE MACHINED TO A TRUE BEARING ALL AROUND.
4. NOTCH LID FOR LIFTING HOOK.
5. OPEN GRATES REQUIRE APPROVAL BY CITY, AND MUST BE BICYCLE SAFE IF USED IN TRAFFIC AREAS.

SUBURBAN AND STANDARD MANHOLE FRAME AND COVER

Manhole Covers

West Linn | DATE: JAN 2000 | DRAWING NO. WL-605 | FILE NO. 00-605

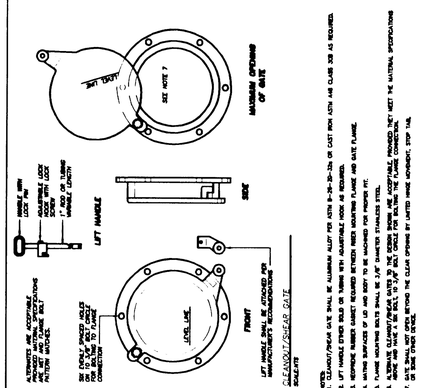

NOTES:
1. CLEANOUT/SHEAR GATE SHALL BE ALUMINUM VALLEY PER ASTM B-26-319, OR CAST IRON ASTM A48 CLASS 30B AS REQUIRED.
2. LIFT HANDLE EITHER ROLD OR 100MM WITH ADJUSTABLE HOOK AS REQUIRED.
3. RESPONSE RUBBER GASKET REQUIRED BETWEEN FRAME MOUNTING FLANGE AND GATE FLANGE.
4. MATING SURFACES OF LID AND BODY TO BE MACHINED FOR PROPER FIT.
5. FLANGE MOUNTING BOLTS SHALL BE 3/4" DIAMETER STAINLESS STEEL.
6. ALTERNATE CLEANOUT/SHEAR GATES TO THE SPECIFIED DESIGN ARE ACCEPTABLE PROVIDED THEY MEET THE MATERIAL SPECIFICATIONS AND HAVE A MINIMUM OPENING EQUAL TO THE SPECIFIED DESIGN.
7. GATE SHALL NOT OPEN BEYOND THE CLEAR OPENING BY LIMITED HINGE MOVEMENT. STOP TAB, OR SIMILAR DEVICE.

Cleanout / Shear Gate

West Linn | DATE: JAN 2000 | DRAWING NO. WL-611 | FILE NO. 00-611

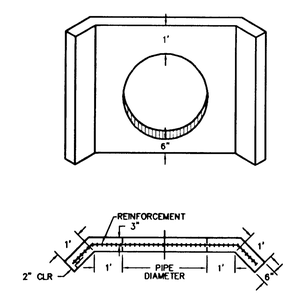

NOTES:
1. USE CONCRETE HAVING A 28 DAY DESIGN STRENGTH OF 3300 PSI.
2. OUTLET WING WALL SHALL BE USED FOR ALL OUTFALL PIPES FROM 10" TO 36".
3. THIS DETAIL REPRESENTS THE MINIMUM REQUIREMENT. THE NEED FOR ADDITIONAL STEEL, A FOOTING AND DRAINAGE BEHIND THE WALL SHALL BE INVESTIGATED BY THE DESIGN ENGINEER.
4. FOR PIPES LARGER THAN 33" OR MULTIPLE PIPE OUTLETS, USE DETAIL WL-612.
5. CONCRETE REINFORCEMENT SHALL CONSIST OF:
   A) ADDING A POLY-FIBER MESH TO THE CONCRETE MIX OR
   B) USE (2) #4 BARS ABOVE AND BELOW PIPE AND #4 BARS AT 6" O.C. VERTICALLY.

Outlet Headwall (For Outlet Pipes of 10" to 33")

West Linn | DATE: JAN 2000 | DRAWING NO. WL-613 | FILE NO. 00-613

D = PIPE DIAMETER
W = BOTTOM WIDTH OF CHANNEL
P = WETTED PERIMETER OF CHANNEL

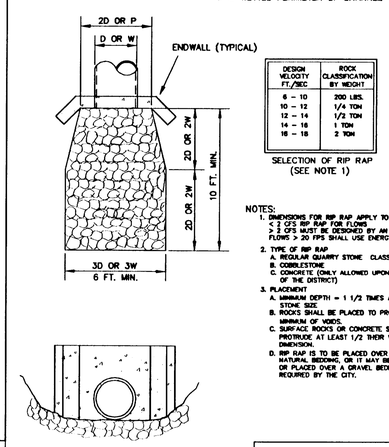

DESIGN VELOCITY FT./SEC.	ROCK CLASSIFICATION BY WEIGHT
6 – 10	200 LBS.
10 – 12	1/4 TON
12 – 14	1/2 TON
14 – 16	1 TON
16 – 18	2 TON

SELECTION OF RIP RAP (SEE NOTE 1)

NOTES:
1. DIMENSIONS FOR RIP RAP APPLY TO FLOWS ≤ 2 CFS. RIP RAP FOR FLOWS > 2 CFS MUST BE DESIGNED BY AN ENGINEER. FLOWS > 20 FPS SHALL USE ENERGY DISSIPATOR
2. TYPE OF RIP RAP
   A. REGULAR QUARRY STONE CLASS 50-200
   B. COBBLESTONE
   C. CONCRETE (ONLY ALLOWED UPON APPROVAL OF THE DISTRICT)
3. PLACEMENT
   A. MINIMUM DEPTH = 1 1/2 TIMES AVERAGE STONE SIZE
   B. ROCKS SHALL BE PLACED TO PROVIDE A MINIMUM OF VOIDS.
   C. SURFACE ROCKS OR CONCRETE SHALL PROTRUDE AT LEAST 1/2 THEIR VERTICAL DIMENSION.
   D. RIP RAP IS TO BE PLACED OVER A NATURAL BEDDING, OR IT MAY BE GROUTED OR PLACED OVER A GRAVEL BEDDING AS REQUIRED BY THE CITY.

Storm Sewer Outfall

West Linn | DATE: JAN 2000 | DRAWING NO. WL-614 | FILE NO. 00-614

06/14/02
Date
SAS
Designed
KM, TR, SR
Drawn
Checked By Date

CENTEX HOMES
AMERICA'S #1 HOMEBUILDER
16520 SW Upper Boones Ferry Road, Suite #200
Portland, OR 97224
Phone: (503) 608-3060
Fax: (503) 608-3061

Rogerfield Phase II-52 Lots

CITY OF WEST LINN, OREGON
STORM DRAIN DETAILS

ASBUILT SUBMITTAL TO CITY OF WEST LINN 02-26-03

otak Incorporated
17355 SW Boones Ferry Road
Lake Oswego, OR 97035-5217
Phone: (503) 635-3618
FAX: (503) 635-5395

10822
Project No.
D822C82
File No.
C8.2
Sheet No.

Copyright 2002 ©

I:\SHANNONM 02/26/03 10:53am --> R:\DWG\D822C82.DWG

XREF LIST
Ltscale: 1
Resolved
D822X005

Standard Fire Hydrant Assembly

NOTES:

1. HYDRANTS TO BE MUELLER CENTURION MDL A-423 ONLY WITH 1 1/2" OPER. NUTS OR CLOW MEDDALION F-2545.
2. HYDRANT COLOR TO BE MILLER EQUIP. ENAMEL O E 40 (SAFETY YELLOW).
3. JOINTS TO BE RESTRAINED BY 3/4" DIA. GALVANIZED STEEL RODS AND THRUST BLOCKS OR MEGA LUGS AND THRUST BLOCKS.
4. ALL FITTINGS IN CONTACT W/CONCRETE SHALL BE WRAPPED IN PLASTIC. HYDRANT DRAIN HOLES TO REMAIN OPEN TO DRAIN ROCK AND OPERATIONAL.
5. MIN. 4 CU. FT. OF 1 1/2"-3/4" CLEAN DRAIN ROCK SHALL BE PLACED AROUND SHOE UP TO A MIN. OF 6" ABOVE DRAIN OUTLETS.
6. WHERE PLANTER STRIP EXISTS, HYDRANT SHALL BE PLACED SO FRONT PORT IS A MINIMUM OF 24" BEHIND FACE OF CURB.
7. WHERE INTEGRAL S/W & CURB EXISTS, HYD. SHALL BE PLACED AT BACK OF SIDEWALK, OR AS DIRECTED BY ENGINEER.
8. BURY OF HYDRANT SHALL BE MEASURED FROM FINISHED GRADE TO BOTTOM OF CONNECTING PIPE.
9. THRUST BLOCK AT FIRE HYDRANT TEE SHALL HAVE A 3.7 SQ. FT. BEARING AREA.
10. HYDRANT VALVE SHALL BE MUELLER RESILIENT WEDGE GATE VALVE #A-2360-16 ONLY.
11. WHERE NO SIDEWALK EXISTS, PLACE A 5'x 5'x 4" THICK A.C. OR CONC. APRON AROUND HYDRANT.
12. NO EXTENTIONS ALLOWED.

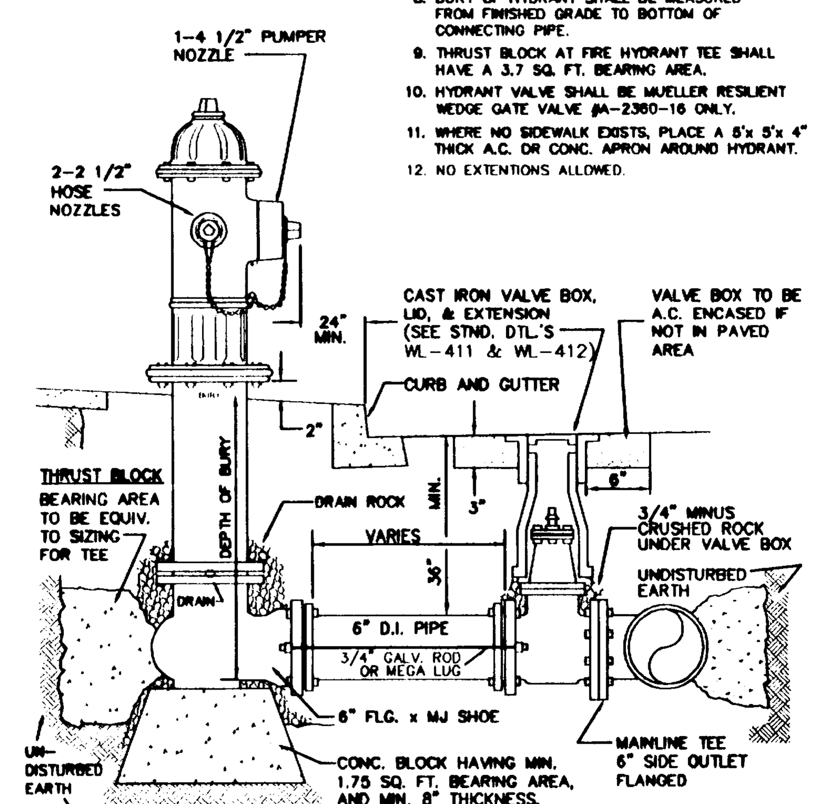

Standard Fire Hydrant Assembly

DATE:	JAN 2000
DRAWING NO.	WL-401
FILE NO.	00-401

Standard 1" Water Service

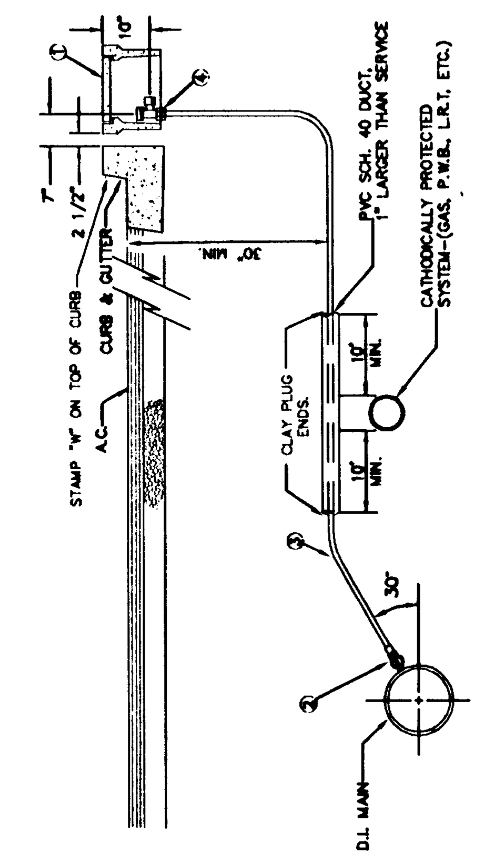

MATERIALS:

1. BROOKS METER BOX, BODY NO. 37, LID AND COVER NO. 37-S.
2. MUELLER CORP. STOP NO. H-15008 OR FORD F1000-4Q SET CORP. STOP WITH OPERATING NUT AT 3 OR 9 O'CLOCK.
3. 1" SOFT TEMPER, TYPE 'K' COPPER TUBING COMPLYING WITH ASTM B-88.
4. MUELLER ANGLE METER STOP NO. H-14258 (FORD NO. KV43-444W-Q).

NOTES:

1. SUBSTITUTES FOR ANY MATERIALS SHOWN SHALL BE APPROVED BY THE CITY ENGINEER.
2. ALL PIPE AND STRUCTURE ZONES SHALL BE BACKFILLED USING 3/4" MINUS CRUSHED AGG. AND COMPACTED TO 95% MAX DENSITY AS DETERMINED BY AASHTO T-180.
3. WHEN AN ACTIVE CATHODIC PROTECTED SYSTEM IS ENCOUNTERED, SCH. 40 PVC SHALL BE INSTALLED AS SHOWN ABOVE WITH CLAY PLUG.
4. METER BOX SHALL BE CENTERED OVER THE COMPLETED METER ASSEMBLY.
5. FOR VACANT RESIDENTIAL LOTS, LOCATE SINGLE SERVICE 18" INSIDE SIDE LOT LINE.
6. TAPS INTO MAIN TO BE AT 18" CENTERLINE MIN.
7. ANGLE METER STOPS TO BE 18" FROM PROPERTY LINE AND NOT IN DRIVEWAY APPROACH.

Standard 1" Water Service

DATE:	JAN 2000
DRAWING NO.	WL-402
FILE NO.	00-402

Permanent or Temporary 4" & 6" Blow-off

BLOW-OFF SIZES REQUIRED	
MAIN SIZE	BLOW-OFF SIZE
4" TO 6"	2"
8" TO 12"	4"
14" TO 18"	6"
20" & UP	PER ENGR.

NOTES:

1. BACKFILL WITH SELECT CRUSHED AGGREGATE A MINIMUM OF 6" ON ALL SIDES.
2. ON TEMPORARY BLOW-OFFS ONLY, AN MJ CAP TAPPED 4" OR 6" MAY BE SUBSTITUTED FOR REDUCER.
3. TEMPORARY BLOW-OFF IS ONE REMOVED AT THE END OF PROJECT CONSTRUCTION. A PERMANENT BLOW-OFF REMAINS ON THE PROJECT AFTER ACCEPTANCE.
4. PLACE BLOW-OFF STANDPIPE 3 FT. INSIDE R.O.W. LINE AT END OF STREET (2FT. FROM BARRICADE).

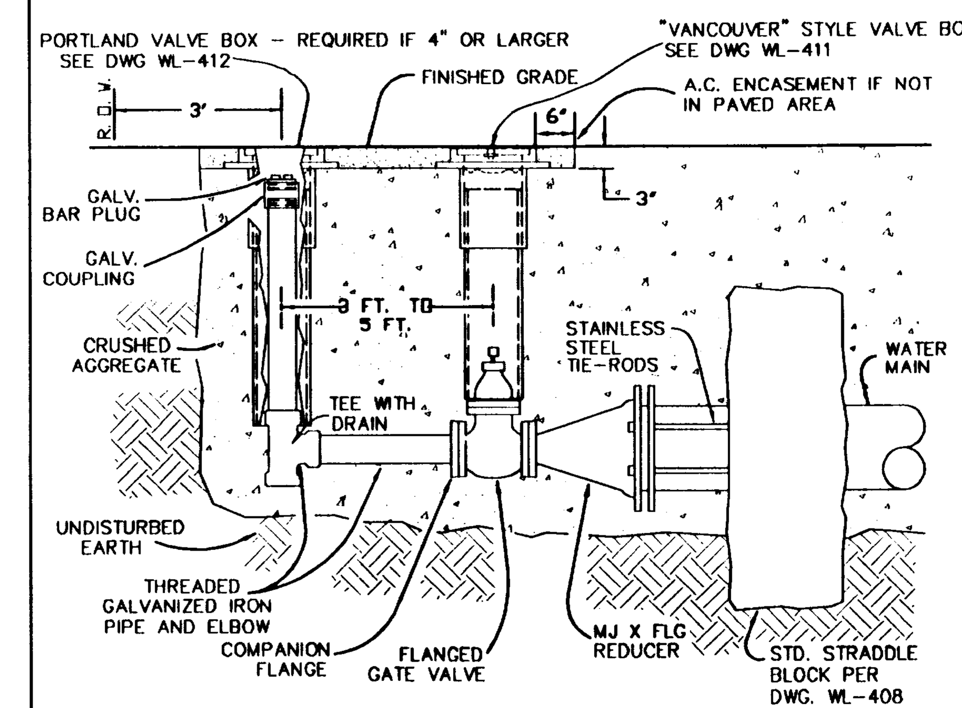

Permanent or Temporary 4" & 6" Blow-off

DATE:	JAN 2000
DRAWING NO.	WL-404B
FILE NO.	00-404B

Standard Air Release Valve Unit

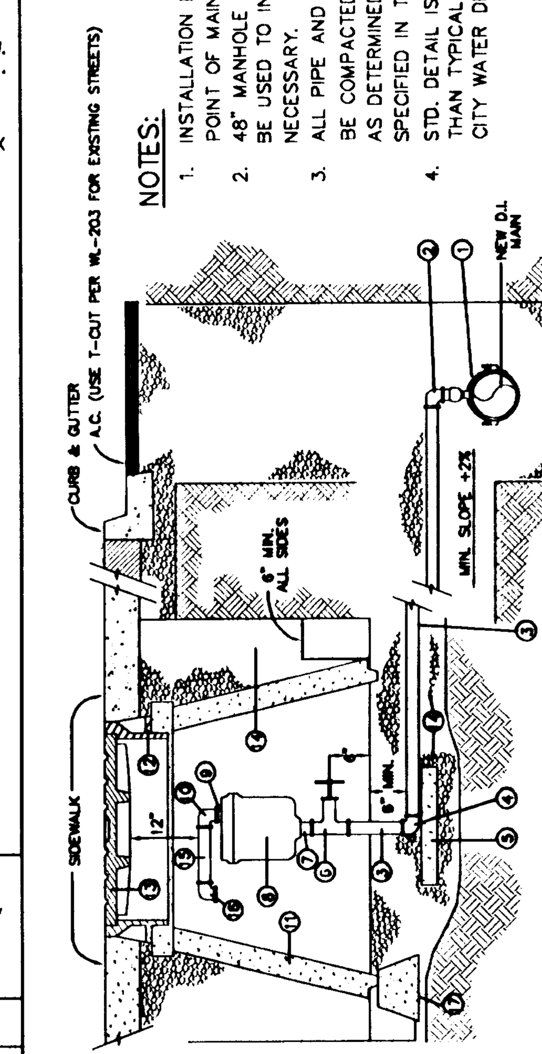

NOTES:

1. INSTALLATION LOCATED AT HIGH POINT OF MAIN
2. 48" MANHOLE BARREL SECTIONS SHALL BE USED TO INCREASE DEPTH IF NECESSARY.
3. ALL PIPE AND STRUCTURE ZONES SHALL BE COMPACTED TO 95% OF MAX. DENSITY AS DETERMINED BY AASHTO T-180 OR AS SPECIFIED IN THE CONTRACT DOCUMENTS.
4. STD. DETAIL IS NOT FOR SHALLOWER THAN TYPICAL INSTALLATIONS. CONTACT CITY WATER DEPT. FOR OPTIONS.

MATERIALS:

1. ROCKWELL NO. 317 SERVICE SADDLE WITH STAINLESS STRAPS
2. MUELLER NO. H15045 2" CORPORATION STOP WITH 1/4 BEND ADAPT (I.P.T. MUELLER 110 CTS)
3. 2" X VARIABLE LENGTH BRASS I.P.T. NIPPLE
4. 2" BRASS 90 DEGREE ELL (MUELLER 110 CTS)
5. 12" X 12" X 4" CONCRETE BLOCK
6. NIBCO NO. 113 2" BRASS GATE VALVE
7. 2" X 3" BRASS I.P.T. NIPPLE
8. 2" AIR RELEASE VALVE (VAL-MATIC #38 OR APCO #205 FOR TYPICAL INSTALLATIONS, IN SOME INSTANCES THE CITY MAY REQUIRE COMBINATION AIR RELEASE & VACUUM UNIT.) INSTALL WALL BRACKETS TO SUPPORT VALVE AS NECESSARY.
9. 1/2" X 1 1/2" OR 2" X 1 1/2" BRASS I.P.T. NIPPLE
10. 1/2" OR 2" BRASS 90 DEGREE ELL (F.M. I.P.T. X F.M. I.P.T.)
11. STD. 48" CONCRETE MANHOLE CONE
12. FRAME PER STD. DWG. WL-214.
13. TAMPERPROOF MANHOLE COVER PER STD. DWG. WL-214.
14. 3/4" MINUS CRUSHED AGG.
15. 1/2" X 6" OR 2" X 6" BRASS NIPPLE, I.P.T.
16. 1/2" OR 2" BRASS 90 DEGREE ELL WITH SCREEN ON OUTLET
17. 3 EA. 12" CONCRETE PIER BLOCKS

Standard Air Release Valve Unit

DATE:	JAN 2000
DRAWING NO.	WL-405
FILE NO.	00-405

Horizontal Thrust Blocking

FITTING SIZE (Inches)	TEE, WYE, & ① HYDRANTS	STRADDLE BLOCK ②	90° BEND ③ PLUGGED CROSS TEE PLUGGED-RUNS	45° BEND ④	22 1/2° BEND ④	11 1/2° BEND ④
2	*	*	*	*	*	*
4	1.7	2.1	2.4	1.3	*	*
6	3.7	4.9	5.3	2.9	1.5	*
8	6.7	8.7	9.5	5.1	2.7	1.3
10	10.5	13.6	14.8	8	4.1	2
12	15.1	19.6	21.3	11.6	5.9	2.9
14						
16	26.8	34.8	37.9	20.5	10.4	5.2
18	33.9	44	47.9	25.9	12.8	6.7
LARGER	**	**	**	**	**	**

BEARING AREA OF THRUST BLOCKS (sq. ft.)

1. ALL VALUES ARE BASED ON THE FOLLOWING ASSUMPTIONS: AVG. PRESSURE = 100 PSI X 2 (safety factor); 1500 PSF SOIL BEARING CAPACITY; NORMAL DISTRIBUTION DESIGN VELOCITY NOT TO EXCEED 5 F/S.
2. ALL FITTINGS SHALL BE WRAPPED IN PLASTIC PRIOR TO PLACEMENT OF CONCRETE.
3. BEARING SURFACE OF THRUST BLOCKING SHALL BE AGAINST UNDISTURBED SOIL
4. ALL CONCRETE MIX SHALL HAVE A MIN. 28 DAY STRENGTH OF 3000 PSI.
5. ALL PIPE ZONES SHALL BE GRAVEL FILLED AND COMPACTED.
6. THRUST BLOCKS FOR PLUGGED CROSS AND PLUGGED TEE SHALL HAVE #4 REBAR LIFTING LOOPS INSTALLED AS SHOWN.
7. VERTICAL THRUST DETAILS–SEE DWG. WL-407.
8. STRADDLE BLOCK DETAILS–SEE DWG. WL-408.

* BLOCK TO UNDISTURBED TRENCH WALLS

** THRUST BLOCKS FOR PIPES LARGER THAN 18" WILL BE INDIVIDUALLY DESIGNED BY THE ENGINEER.

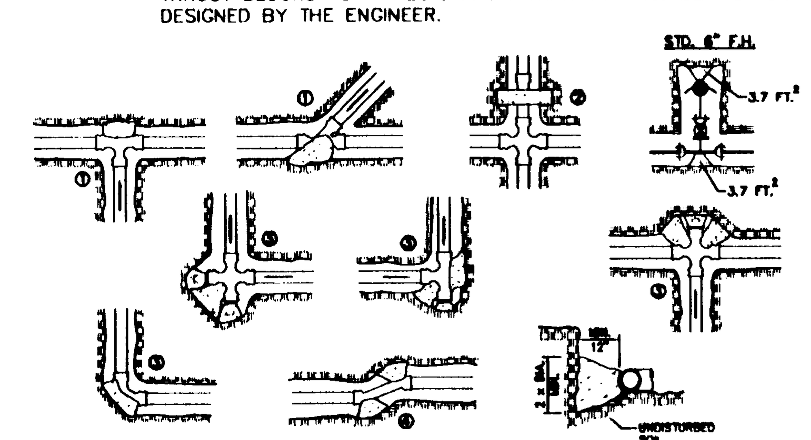

Horizontal Thrust Blocking

DATE:	JAN 2000
DRAWING NO.	WL-406
FILE NO.	00-406

Standard Valve Box Detail

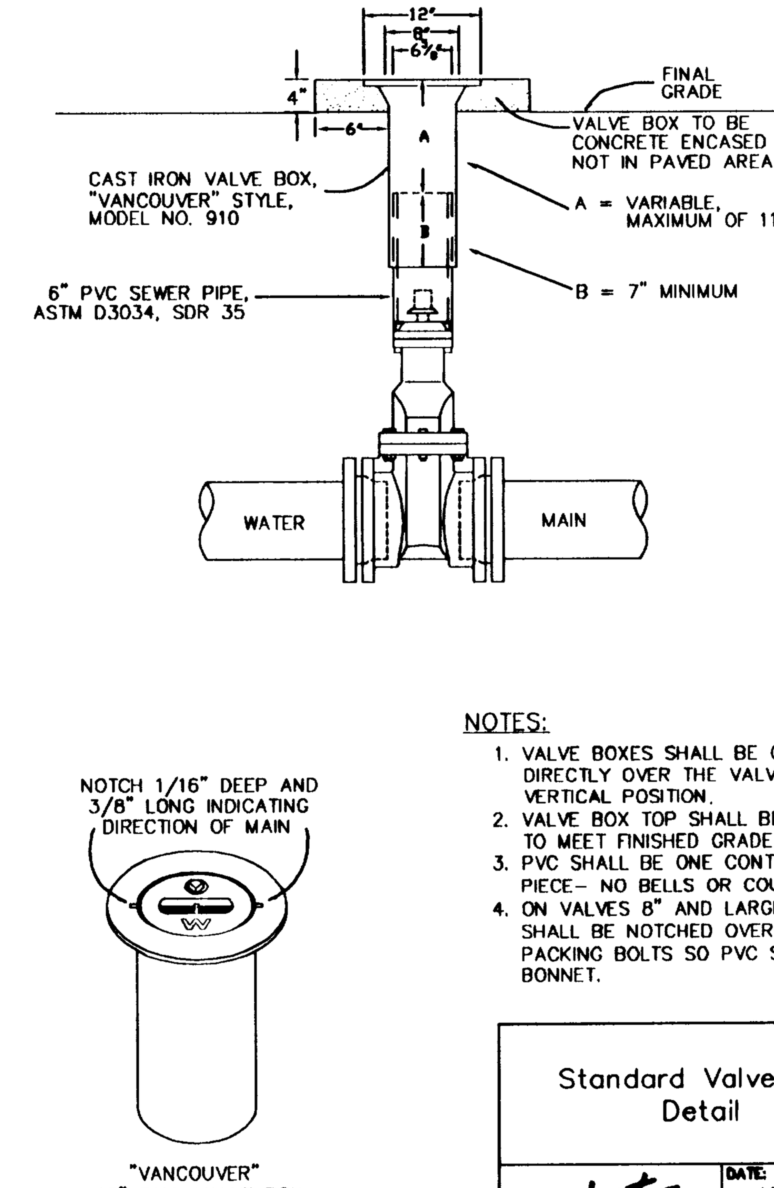

NOTES:

1. VALVE BOXES SHALL BE CENTERED DIRECTLY OVER THE VALVE NUT IN A VERTICAL POSITION.
2. VALVE BOX TOP SHALL BE ADJUSTED TO MEET FINISHED GRADE.
3. PVC SHALL BE ONE CONTINUOUS PIECE– NO BELLS OR COUPLERS.
4. ON VALVES 8" AND LARGER, PVC SHALL BE NOTCHED OVER VALVE PACKING BOLTS SO PVC SITS ON BONNET.

Standard Valve Box Detail

DATE:	JAN 2000
DRAWING NO.	WL-411
FILE NO.	00-411

Standard Valve Box Detail for 4" or Larger Blow-offs

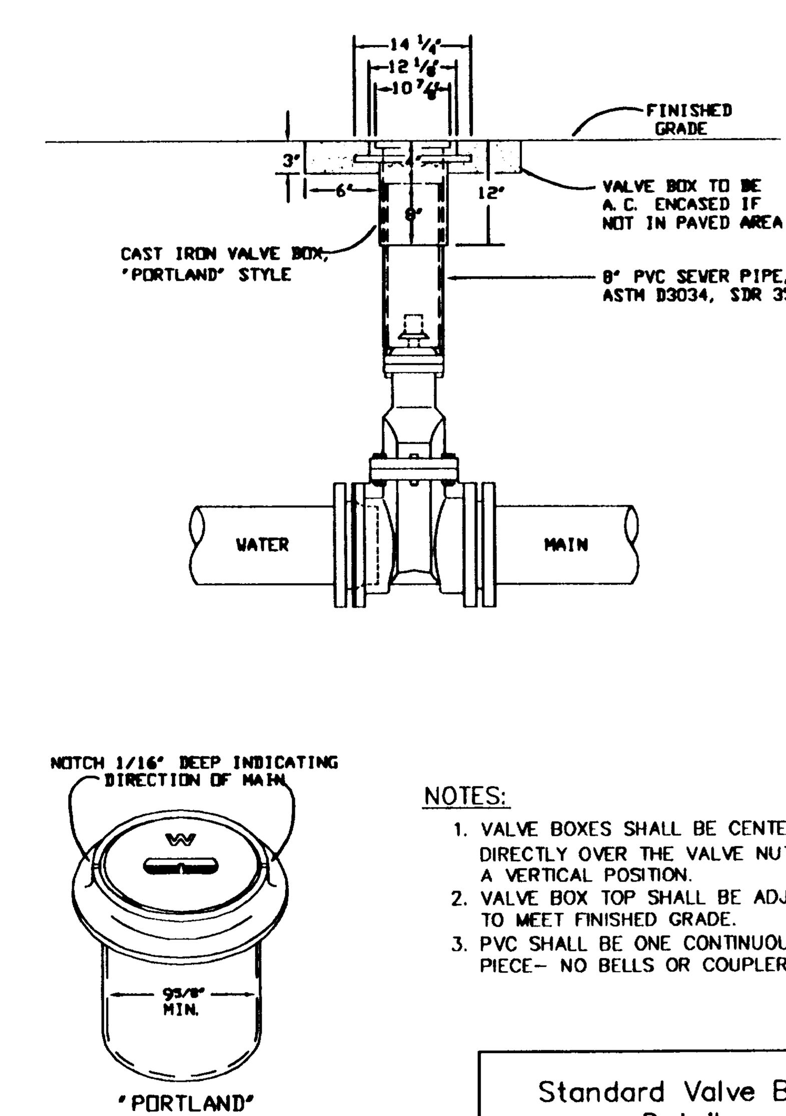

NOTES:

1. VALVE BOXES SHALL BE CENTERED DIRECTLY OVER THE VALVE NUT IN A VERTICAL POSITION.
2. VALVE BOX TOP SHALL BE ADJUSTED TO MEET FINISHED GRADE.
3. PVC SHALL BE ONE CONTINUOUS PIECE– NO BELLS OR COUPLERS.

Standard Valve Box Detail for 4" or Larger Blow-offs

DATE:	JAN 2000
DRAWING NO.	WL-412
FILE NO.	00-412

Date	06/14/02
Designed	SAS
Drawn	KM, TR, SR
Checked By Date	SAS 2/26/03

CENTEX HOMES
AMERICA'S #1 HOMEBUILDER
16520 SW Upper Boones Ferry Road, Suite #200
Portland, OR 97224
Phone: (503) 608-3060
Fax: (503) 608-3061

Rogerfield Phase II-52 Lots

CITY OF WEST LINN, OREGON
WATER DETAILS

ASBUILT SUBMITTAL TO CITY OF WEST LINN 02-26-03

otak Incorporated
17355 SW Boones Ferry Road
Lake Oswego, OR 97035-5217
Phone: (503) 635-3618
FAX: (503) 635-5395

Project No.	10822
File No.	D822C83
Sheet No.	C8.3

Copyright 2002 ©

SHANNONM 02/25/03 9:39am --> R:\DWG\D822C83.DWG