PARKER CREST

AS BUILT PLANS

LOCATED IN THE SE ¼ OF SECTION 36, TOWNSHIP 2 SOUTH,
RANGE 1 EAST, WILLAMETTE MERIDIAN CLACKAMAS COUNTY, OREGON

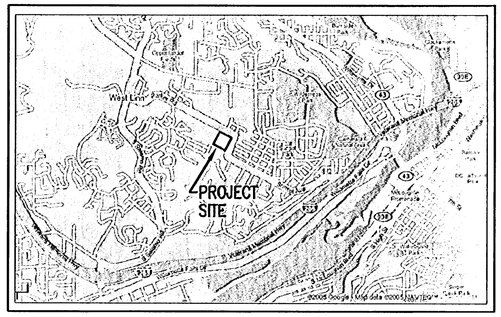

VICINITY MAP
NO SCALE

DEVELOPER

D.R. HORTON
C/O J.T. SMITH COMPANIES
4386 SW MACADAM AVE., SUITE 102
PORTLAND, OR 97239
PHONE (503) 657-3402
FAX (503) 657-3825
CONTACT: SLAVIK DEZHNYUK

ENGINEER AND SURVEYOR

HARRIS-McMONAGLE ASSOCIATES, INC.
12555 SW HALL BLVD.
TIGARD, OR 97223
PHONE (503) 639-3453
FAX (503) 639-1232
CONTACT: JIM HARRIS

GEOTECHNICAL ENGINEER

GEOPACIFIC ENGINEERING, INC.
7312 SW DURHAM RD.
PORTLAND, OREGON 97224
PHONE (503) 598-8445
CONTACT: JIM IMBRIE

SITE INFORMATION

4300 S PARKER ROAD
WEST LINN, OR
TAX MAP 2S1E36, TAX LOT 100
GROSS SITE AREA = 8.2 AC.
ZONING: CITY OF WEST LINN R-7

BENCH MARK

CITY OF WEST LINN BENCHMARK "B" A 3" CAP ON PIPE WITH YELLOW WATERWORKS LID, 93.5 FEET EAST AND 17.0 FEET SOUTH OF THE EDGE OF PAVEMENT FROM 4 WAY INTERSECTION OF ROSEMONT/SANTA ANITA

ELEVATION 667.22

BENCHMARK ONSITE

TOP OF FIRE HYDRANT OPERATING NUT AT THE NORTHEAST CORNER OF COHO LANE AND PARKER ROAD.

ELEVATION 518.20

IMPERVIOUS AREA INFORMATION

NEW IMPERVIOUS AREA:
STREETS = 68,302 SF
NEW HOMES = 89,900 SF (2900 SF/LOT)
TOTAL NEW = 156,202 SF

0 40 80
SCALE: 1"=40'

PARKER CREST

AS BUILT PLANS

MAY 08, 2007

SHEET INDEX

1 Cover Sheet, Control Points and Vicinity Map
2 Conditions of Approval and Street Cross Sections
3 Existing Conditions & Tree Plan
4 Grading and ESC Plan
5 Grading Details and Notes
6 Retaining Wall Details and Notes
7 Street Plan
7a Street Striping Plan
8 Street Profiles - Napoli Drive and Winkle Way 0+00 to 13+50
9 Street Profiles - Winkle Way and Beacon Hill Lane 13+50 to 17+00, Landis Street and Eyebrows
10 Parker Road Profile
11 3-Sided Culvert Details
12 Culvert Headwall Cross Sections
13 Storm Sewer Plan
14 Storm Sewer Profiles - Lines ST-A, ST-A2, ST-C & ST-D
15 Storm Sewer Profiles - Lines ST-B & ST-B4
16 Water Quality and Detention Pond Plan
17 Sanitary Sewer Plan
18 Sanitary Sewer Profile
19 Water Plan
20 Water Profile
21 Composite Utility Plan
22 City of West Linn Standard Details (General - #'s 200-218)
23 City of West Linn Standard Details (Sanitary & Water - #'s 300-409)
24 City of West Linn Standard Details (Street - #'s 501-518)
25 City of West Linn Standard Details (Storm - #'s 600-616)
L1 Water Quality and Detention Pond Landscaping Plan
L2 Water Quality Swale Landscaping Plan
E1 Street Lighting Plan

FINAL DECISION NOTICE
SUB 05-05 and MISC-05-47

IN THE MATTER OF A 31 LOT SUBDIVISIONAND NATURAL DRAINAGEWAY PERMIT AT 4300 PARKER ROAD

At their regular meeting of March 23, 2006, the West Linn Planning Commission held a public hearing to consider the request by owner Eder Melinda S Trustee and applicant Ken Olson to approve a 31-lot subdivision and a natural drainageway permit. The site consists of tax lot 100 of Assessor's Map 2-1E-36. The approval criteria for a subdivision are found within Chapter 85 of the Community Development Code; for a natural drainageway permit, Chapter 32. The hearing was conducted pursuant to the provisions of CDC, Chapter 99.

The hearing commenced with a staff report presented by Peter Spir, Associate Planner. The applicant provided a presentation supported by Michael Robinson, Atty., Jim Harris P.E., and Tim Murphy, PE.

William Relyea, representing the Parker Crest Neighborhood Association, spoke in opposition to the application. The opposition focused on the desire to have the site rezoned to and developed at a lower density of R-15 or R-20 and not as it's current R-7 zone allows. There was also concern about the adequacy of the storm facilities. The applicant's attorney, Michael Robinson rebutted on the issue of the zoning while the applicant's engineer addressed concerns about storm drainage. It was noted that storm output from this site has to be less than or equal to existing/pre-development release rates.

Alice Richmond submitted written testimony into the record and provided oral testimony in favor of the application. Submitted into the record were letters from William and Carol Koran and another from Donald Frank. Both letters were in support of the application and the internal street configuration. The public hearing was closed

Commissioner Jones made a motion seconded by Commissioner Fisher to approve the application with amendments to staff's conditions. The vote was four to three in favor of the motion. Thus the application was approved with the following conditions:

1. A signed public eight-foot wide asphalt pedestrian/bicycle path shall extend from the interior street to Parker Road at Lancaster Street. A four-foot high cyclone fence or acceptable facsimile shall delineate this pathway.
2. A signed public eight-foot wide all weather pedestrian and bicycle path shall traverse Tract D between Parker Road and "A" Loop North. A four-foot high cyclone fence or acceptable facsimile shall delineate this pathway.
3. All public improvements to include all conditions of approval listed herein must be in accordance with the City of West Linn design and construction standards, professional engineering standards, and accepted industry standard construction practice. Where conflict between standards exist, the most stringent will apply unless allowed by the City Engineer, but in no case may the City Engineer allow a lesser standard than required by the City's design and construction standards, except to the extent that adjustments, variances or exceptions are allowed by those standards.
4. All overhead utilities along proposed project frontage shall be undergrounded whenever possible.
5. In addition to the proposed Parker Road improvements, the improved pavement width shall extend to the centerline of the street. Additionally from Lancaster to Southerly property boundary, improvements shall consist of half-street plus a travel lane.
6. The retaining walls proposed along Parker Road will require pedestrian safety fencing. Vehicular guardrails and/or taller curbs may also be required depending upon the final location of the walls.
7. The steep grades along the new loop roads will result in high-velocity storm water flow in gutters during rain events. Provide additional catch basins at intermediate locations along these steep slopes.
8. Coordinate with the Maxfield Subdivision with regard to the path that will extend to Beacon Hill Lane.
9. The storm drainage report is preliminary, and it is stated in the report that it is assumed there will be changes during final design. A final storm drainage report will be required. The calculations for detention and treatment will include the offsite improvements to Parker Road and Beacon Hill Lane.
10. New waterline between lots 20 and 21 shall connect with new waterline in Lancaster to be installed by Sienna Estates. Waterline also to extend in Lancaster for Southerly property boundary for future looping connection.
11. Provide sanitary sewer main stubout connection to Parker (south of Lancaster) to allow for future main tie-ins.
12. Applicant shall dedicate the natural drainageway and associated transition area to City of West Linn by way of deed or plat recordation.
13. Parker Crest Subdivision shall be developed per the revised site plan dated March 21, 2006 with the addition of a curb flush sidewalk adjacent to Tract A and continuing along lot 14.
14. Applicant will conduct wetland delineation and should jurisdictional wetlands exist, obtain USACE and DSL permits, which will then be presented to city staff to manage and mitigate as necessary.

This decision will become effective 14 days from the date of mailing of this final decision as identified below. Those parties with standing (i.e., those individuals who submitted letters into the record, or provided oral or written testimony during the course of the hearing, or signed in on the attendance sheet at the hearing, or who have contacted City Planning staff and made their identities known to staff) may appeal this decision to the West Linn City Council within 14 days of the mailing of this decision pursuant to the provisions of Chapter 99 of the Community Development Code. Such appeals would require payment of fee and a completed appeal application form together with the specific grounds for appeal to the Planning Director prior to the appeal-filing deadline.

J. Kovash — April 2, 2006
JOHN KOVASH, CHAIR — DATE
WEST LINN PLANNING COMMISSION

Mailed this 4 day of April, 2006.
Therefore, this decision becomes final at 5 p.m., 4/18/, 2006.
Devrew/Finaldecisions/SUB 05-05

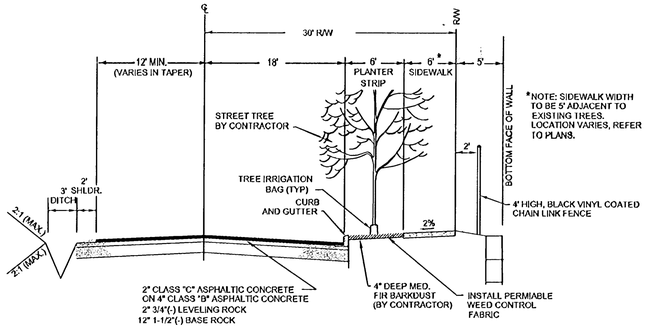

PARKER ROAD
TYPICAL STREET SECTION
3+00 TO 5+14.61
AND 12+96.44 TO 15+47.69
NO SCALE

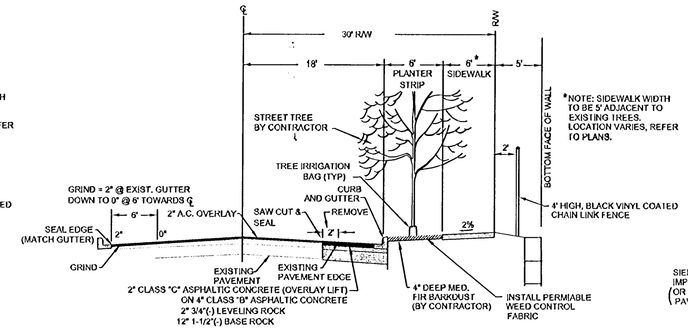

PARKER ROAD
TYPICAL STREET SECTION
5+14.61 TO 9+73.79
NO SCALE

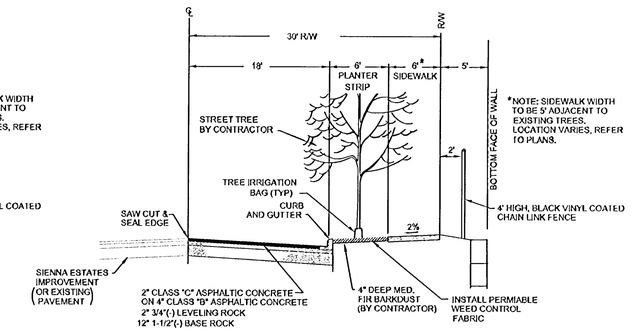

PARKER ROAD
TYPICAL STREET SECTION
9+73.79 TO 12+96.44
NO SCALE

GENERAL NOTES

1. ALL CONSTRUCTION SHALL BE IN ACCORDANCE WITH THE "CITY OF WEST LINN STREET/UTILITY DESIGN AND CONSTRUCTION STANDARDS", DATED MAY 2005 AND OAR'S CHAPTER 333. ALL STREET, STORM SEWER AND SANITARY SEWER CONSTRUCTION THAT IS NOT ADDRESSED IN THE CITY'S STANDARDS SHALL BE IN ACCORDANCE WITH APWA STANDARDS. ALL WATER SYSTEM CONSTRUCTION THAT IS NOT ADDRESSED IN THE CITY'S STANDARDS SHALL BE IN ACCORDANCE WITH AWWA STANDARDS. CONTRACTOR IS TO OBTAIN A COPY OF THE GEOTECHNICAL REPORT PREPARED FOR THIS PROJECT PRIOR TO CONSTRUCTION.

2. PRIOR TO ANY CONSTRUCTION, LOCATIONS OF EXISTING UTILITIES SHALL BE VERIFIED BY THE CONTRACTOR. WHEN ACTUAL CONDITIONS DIFFER FROM THOSE SHOWN ON THE PLANS, THE CONTRACTOR SHALL NOTIFY THE ENGINEER PRIOR TO PROCEEDING WITH CONSTRUCTION.

3. ORGANIC AND NON-DESIRABLE MATERIALS SHALL BE REMOVED FROM THE CONSTRUCTION AREA AS DIRECTED BY THE GEOTECHNICAL ENGINEER.

4. ALL FILL AREAS SHALL BE STRIPPED OF ORGANIC MATERIAL. FILL WILL BE PLACED IN 6-INCH LAYERS AND COMPACTED TO 95 PERCENT RELATIVE MAXIMUM DENSITY ACCORDING TO AASHTO T-180 STANDARDS. LANDSCAPE AREAS SHALL ABE COMPACTED TO 90 PERCENT. THE CONTRACTOR SHALL PROVIDE COMPACTION TESTING, ONE FOR EVERY 10,000 SQUARE FEET OF AREA AND FOR EVERY 2 LAYERS OR 16" AND EVERY 100 LINEAR FEET OF FILL PLACED. COMPACTION REPORTS FROM A NATIONALLY ACCREDITED TESTING LAB SHALL BE SUPPLIED TO THE ENGINEER. A COPY OF THE REPORTS SHALL BE GIVEN TO THE CITY.

5. CONTRACTOR SHALL LEAVE ALL AREAS OF THE PROJECT FREE OF DEBRIS AND UNUSED CONSTRUCTION MATERIALS.
   a) AREAS TO BE LANDSCAPED SHALL BE SMOOTHED AND LEFT TO THE GRADES INDICATED ON THE GRADING PLAN.
   b) ALL DISTURBED AREAS NOT TO BE LANDSCAPED SHALL BE SEEDED PER EROSION CONTROL NOTES ON APPROVED GRADING PERMIT SET.
   c) ALL EXCESS/EXTRA MATERIAL SHALL BE REMOVED FROM THE SITE.

6. ANY CHANGES FROM THE APPROVED PLANS SHALL BE REQUESTED BY THE CONTRACTOR IN WRITING. THE DESIGN ENGINEER AND THE CITY OF WEST LINN'S PROJECT ENGINEER MUST APPROVE THE CHANGE PRIOR TO ITS IMPLEMENTATION. COMPLEXITY OF MODIFICATION WILL DETERMINE IF REVISED PLANS ARE REQUIRED.

7. CITY OF WEST LINN DETAILS SHALL BE USED AT LOCATIONS AS SPECIFIED IN THE PLANS, SEE DETAIL SHEETS.

8. DURING CONSTRUCTION, ALL EROSION CONTROL MEASURES SHALL CONFORM TO CLACKAMAS COUNTY EROSION CONTROL STANDARDS.

9. IN CASE OF A DISCREPANCY BETWEEN THE DRAWINGS AND THE FIGURES WRITTEN THEREON, THE FIGURES SHALL BE DEEMED TO GOVERN.

10. THE OWNER WILL SUPPLY ONE SET OF STAKES FOR EACH CONSTRUCTION OPERATION AS DESCRIBED IN THE CONTRACT DOCUMENTS AND SPECIFICATIONS. THE CONTRACTOR SHALL DESIGNATE A REPRESENTATIVE OR REPRESENTATIVES WHO ARE AUTHORIZED TO REQUEST STAKES. STAKING REQUESTS FROM AUTHORIZED REPRESENTATIVE SHALL BE MADE TO BILL McMONAGLE AT HARRIS-McMONAGLE (503-639-3453, x-14) AT LEAST 48 HOURS IN ADVANCE OF THE NEED FOR SAID STAKES. ONLY REQUESTS FROM AUTHORIZED REPRESENTATIVES WILL BE HONORED. ANY RESTAKING WILL BE DONE AT THE EXPENSE OF THE CONTRACTOR.

11. WEEK DAY WORK HOURS ARE 7 AM TO 7 PM; SATURDAY WORK HOURS ARE 9 AM TO 5 PM AND NO WORK ON SUNDAYS OR HOLIDAYS.

12. THE CITY OF WEST LINN SHALL BE PRESENT WHEN TESTING IS PERFORMED AND SUPPLIED WITH A COPY OF TEST RESULTS. ALL FACILITIES WILL BE ACCEPTED BY THE CITY PRIOR TO CONNECTION TO EXISTING SYSTEMS.

13. ALL FEES FOR STREET TREES SHALL BE PAID TO THE CITY OF WEST LINN PARKS AND RECREATION DEPT.

14. NO BUILDING PERMITS SHALL BE ISSUED UNTIL ALL IMPROVEMENTS HAVE BEEN COMPLETED AND ACCEPTED.

15. THE CONTRACTOR SHALL REMOVE ALL SOFT OR OTHERWISE UNSUITABLE MATERIAL AT SUBGRADE AND REPLACE WITH APPROVED MATERIAL AT THE DIRECTION OF THE PROJECT GEOTECHNICAL ENGINEER. THE CONTRACTOR SHALL COMPACT TO A LINE ONE FOOT BEHIND BACK OF CURB.

16. FINAL SUBGRADE PROOF-ROLL WITH 10 CY TRUCK LOADED WITH ROCK IS REQUIRED PRIOR TO PLACING AGGREGATE BASE.

17. FINAL BASE ROCK PROOF ROLL WITH 10 CY TRUCK LOADED WITH ROCK IS REQUIRED PRIOR TO PAVING. BASE ROCK TO BE COMPACTED TO 95 PERCENT RELATIVE MAXIMUM DENSITY ACCORDING TO AASHTO T-180 STANDARDS.

18. PLEASE NOTE CITY OF WEST LINN STANDARD CONSTRUCTION SPECIFICATION SECTION 505.03.11 FOR WEATHER RELATED LIMITATIONS ON THE PLACEMENT OF ASPHALT CONCRETE.

19. THE DENSITY OF THE COMPACTED BASE LIFT OF AC SHALL BE AT LEAST 92% OF RICE IN CONFORMANCE WITH THE AASHTO T209 AS MODIFIED BY THE OREGON STATE HIGHWAY DEPARTMENT.

20. THE DENSITY OF THE COMPACTED TOP LIFT OF AC SHALL BE AT LEAST 92% OF RICE IN CONFORMANCE WITH AASHTO T209 AS MODIFIED BY THE OREGON STATE HIGHWAY DEPARTMENT.

21. DENSITY TESTS WILL BE REQUIRED FOR TRENCH BACKFILL AND ASPHALT, PER THE CITY OF WEST LINN STANDARD CONSTRUCTION SPECIFICATIONS. COPIES OF ALL REPORTS ARE TO BE SUPPLIED TO THE CITY INSPECTOR AND DESIGN ENGINEER.

22. CONTRACTOR SHALL SUBMIT SCHEDULE DETAILING SEQUENCE OF CONSTRUCTION PRIOR TO THE PRE-CONSTRUCTION MEETING.

23. THE STRENGTH OF CONCRETE USED FOR CURBS, GUTTERS AND SIDEWALKS SHALL BE 3300 psi.

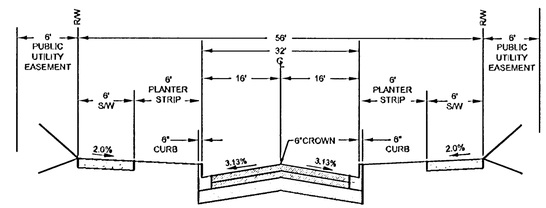

NAPOLI DRIVE & WINKLE WAY
PUBLIC STREET SECTION
NO SCALE

SIDEWALK LOCATION:
ALL SIDEWALK LOCATED ADJACENT TO SENSITIVE AREAS SHALL BE CONSTRUCTED ADJOINING THE BACK OF CURB ON ALL STREETS.

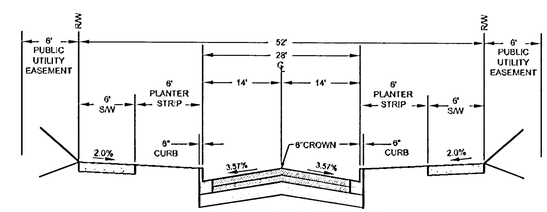

LANDIS STREET
PUBLIC STREET SECTION
NO SCALE

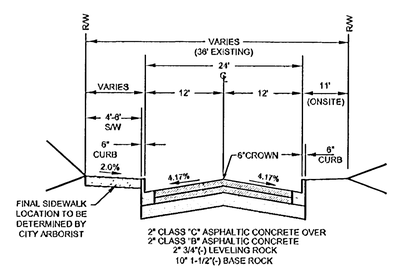

BEACON HILL LANE
PUBLIC STREET SECTION
NO SCALE

REV.	DESCRIPTION	SUB.	APPR.	DATE
5	AS BUILT	WNH	JGH	5/08/07
4	REVISED STREET SECTIONS PER CITY COMMENTS	TCM	JRH	9/20/06
3	REVISED SECTIONS PER CITY COMMENTS	TCM	JRH	9/01/06
2	ADDED GENERAL NOTES PER CITY REDLINES	TCM	JRH	8/02/06
1	REVISED PER CITY REDLINES	TCM	JRH	7/31/06

REFER TO TRACING FOR LATEST REVISION

REFERENCE INFORMATION AND NOTES:

AS BUILT
A/B DENOTES "AS BUILT" DIMENSIONS

REGISTERED PROFESSIONAL ENGINEER 6219 OREGON JULY 12, 1988 JAMES R. HARRIS
EXPIRES JUNE 30th, 2007

DESIGN TCM
DRAFTED TCM
CHECKED JRH
DATE 6/07/06

D.R. HORTON
c/o J.T. SMITH COMPANIES
4386 SW MACADAM AVE., SUITE 102
PORTLAND, OR 97239

HARRIS-McMONAGLE ASSOCIATES, INC.
ENGINEERS - SURVEYORS
12555 S.W. HALL BLVD.
TIGARD, OR 97223-6287
PHONE: (503) 639-3453

PARKER CREST
4300 PARKER ROAD

CONDITIONS OF APPROVAL AND STREET CROSS SECTIONS

SCALE NO SCALE
DWG. NAME CONST BASE
SHEET 2 OF 25

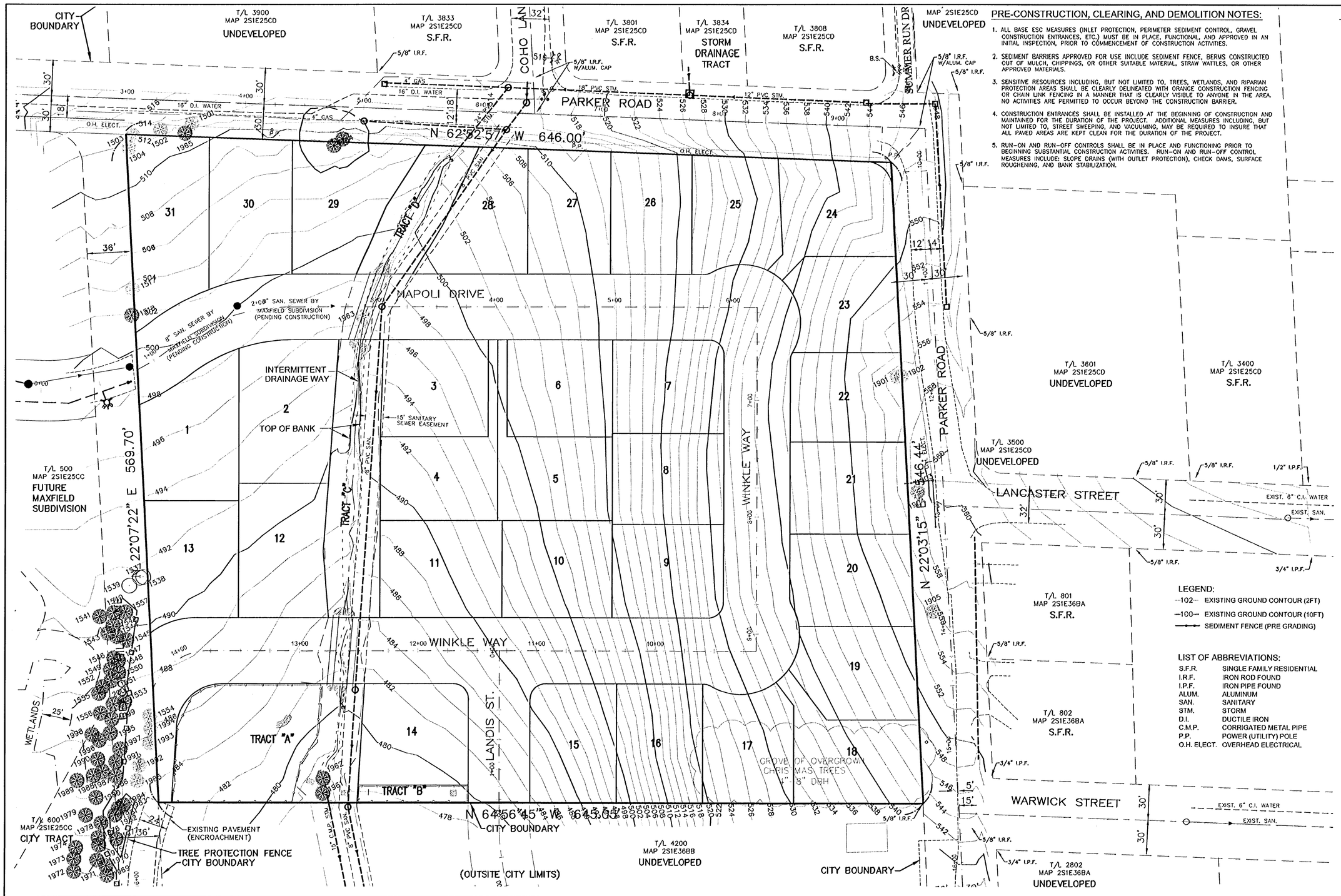

PRE-CONSTRUCTION, CLEARING, AND DEMOLITION NOTES:

1. ALL BASE ESC MEASURES (INLET PROTECTION, PERIMETER SEDIMENT CONTROL, GRAVEL CONSTRUCTION ENTRANCES, ETC.) MUST BE IN PLACE, FUNCTIONAL, AND APPROVED IN AN INITIAL INSPECTION, PRIOR TO COMMENCEMENT OF CONSTRUCTION ACTIVITIES.
2. SEDIMENT BARRIERS APPROVED FOR USE INCLUDE SEDIMENT FENCE, BERMS CONSTRUCTED OUT OF MULCH, CHIPPINGS, OR OTHER SUITABLE MATERIAL, STRAW WATTLES, OR OTHER APPROVED MATERIALS.
3. SENSITIVE RESOURCES INCLUDING, BUT NOT LIMITED TO, TREES, WETLANDS, AND RIPARIAN PROTECTION AREAS SHALL BE CLEARLY DELINEATED WITH ORANGE CONSTRUCTION FENCING OR CHAIN LINK FENCING IN A MANNER THAT IS CLEARLY VISIBLE TO ANYONE IN THE AREA. NO ACTIVITIES ARE PERMITTED TO OCCUR BEYOND THE CONSTRUCTION BARRIER.
4. CONSTRUCTION ENTRANCES SHALL BE INSTALLED AT THE BEGINNING OF CONSTRUCTION AND MAINTAINED FOR THE DURATION OF THE PROJECT. ADDITIONAL MEASURES INCLUDING, BUT NOT LIMITED TO, STREET SWEEPING, AND VACUUMING, MAY BE REQUIRED TO INSURE THAT ALL PAVED AREAS ARE KEPT CLEAN FOR THE DURATION OF THE PROJECT.
5. RUN-ON AND RUN-OFF CONTROLS SHALL BE IN PLACE AND FUNCTIONING PRIOR TO BEGINNING SUBSTANTIAL CONSTRUCTION ACTIVITIES. RUN-ON AND RUN-OFF CONTROL MEASURES INCLUDE: SLOPE DRAINS (WITH OUTLET PROTECTION), CHECK DAMS, SURFACE ROUGHENING, AND BANK STABILIZATION.

TREE INDEX (REVISED 9/01/06):

TREE NO.	DESCRIPTION	CUT IN.	SAVE IN.
*1501	OAK	6	
1502	APPLE	7,8&10	
1503	HAWTHORNE	5,7,7&10	
1504	HAWTHORNE	8,8&8	
1517	HAWTHORNE	6&7	
1518	OAK		6
1537	OAK		8
1538	OAK		6
1539	OAK		6
1540	OAK		13
1541	OAK		13&15
1542	OAK		15
1543	OAK		8&9
1544	OAK		6
1545	ASH (DEAD)		8,8,8&8
1546	ASH		11
1547	ASH		8&11
1548	ASH		7&9
1549	ASH		6
1550	ASH		6,8&10
1551	ASH		8
1552	ASH		8
1553	OAK (BENT)		8
1554	ASH	8	
1555	ASH		12
1556	ASH		15
1557	ASH		8&12
1901	OAK		24&26
1902	MADRONE		8
1903	ASH	14	
1904	ASH	12	
1905	HAWTHORNE	10&12	
1961	ASH		8,12,14&10
1962	ASH		8&14
1963	ASH	16,16&18	
1964	OAK		48
1965	OAK		28
1966	OAK		12&16
1967	OAK		10,12&14
1968	ASH		11
1969	OAK		11&14
1970	OAK		13
1971	OAK		8
1972	OAK		12&14
1973	OAK		10&13
1974	OAK		4&7
1975	OAK		12&12
1976	OAK		8
1977	OAK		11,12&12
1978	OAK		8,12&12
1979	OAK		6
1980	OAK		6,10&12
1981	OAK		5
1982	OAK		11&14
1983	OAK		10&10
1984	OAK		15
1985	HAWTHORNE	9	
1986	OAK		16&17
1987	OAK		9
1988	CHERRY		5
1989	OAK		12&15
1990	OAK		9&11
1991	OAK		8,9&12
1992	HAWTHORNE	7	
1993	HAWTHORNE	6&10	
1994	HAWTHORNE	5	
1995	OAK		8&12
1996	OAK		10
1997	OAK		8,12&13
1998	ASH		8&12
1999	OAK		6&10
2000	OAK		8

* ASTERISK DENOTES SIGNIFICANT TREE TO BE REMOVED (1 TREE, 6 TOTAL DIAMETER INCHES).

LEGEND:

- 102 — EXISTING GROUND CONTOUR (2FT)
- 100 — EXISTING GROUND CONTOUR (10FT)
- SEDIMENT FENCE (PRE GRADING)

LIST OF ABBREVIATIONS:

S.F.R.	SINGLE FAMILY RESIDENTIAL
I.R.F.	IRON ROD FOUND
I.P.F.	IRON PIPE FOUND
ALUM.	ALUMINUM
SAN.	SANITARY
STM.	STORM
D.I.	DUCTILE IRON
C.M.P.	CORRIGATED METAL PIPE
P.P.	POWER (UTILITY) POLE
O.H. ELECT.	OVERHEAD ELECTRICAL

TREE LEGEND:

- EXISTING TREE TO BE RETAINED
- EXISTING TREE TO BE REMOVED
- EXISTING TREE CUT OR DESTROYED BY OTHERS OR STORM EVENT SINCE ORIGINAL TREE SURVEY

STREET TREES:

THE CITY PARKS DEPARTMENT WILL PLANT ALL STREET TREES AND THE OWNER WILL PAY THE DEPARTMENT THE APPROPRIATE FEE (CURRENTLY $150 PER TREE) PRIOR TO FINALIZING THE SUBDIVISION.

REV.	DESCRIPTION	SUB.	APPR.	DATE
4	AS BUILT	WNH	JCH	5/08/07
3	REVISED PER NEW BOUNDARY AND CITY COMMENTS	TCM	JRH	9/01/06
2	ADDED TREE PROTECTION FENCING	TCM	JRH	8/02/06
1	REVISED PER CITY OF WEST LINN REDLINES	TCM	JRH	7/31/06

REFER TO TRACING FOR LATEST REVISION

REFERENCE INFORMATION AND NOTES:

AS BUILT
A/B DENOTES "AS BUILT" DIMENSIONS

REGISTERED PROFESSIONAL ENGINEER 6219 OREGON JULY 12, 1968 JAMES R. HARRIS
EXPIRES JUNE 30th, 2007

DESIGN: TCM
DRAFTED: TCM
CHECKED: JRH
DATE: 6/07/06

D.R. HORTON
c/o J.T. SMITH COMPANIES
4386 SW MACADAM AVE., SUITE 102
PORTLAND, OR 97239

HARRIS-McMONAGLE ASSOCIATES, INC.
ENGINEERS - SURVEYORS
12555 S.W. HALL BLVD.
TIGARD, OR 97223-8287
PHONE: (503) 639-3453

PARKER CREST
4300 PARKER ROAD
EXISTING CONDITIONS AND TREE PLAN

SCALE: 1"=40'
DWG. NAME: 3.EXIST
SHEET 3 OF 25

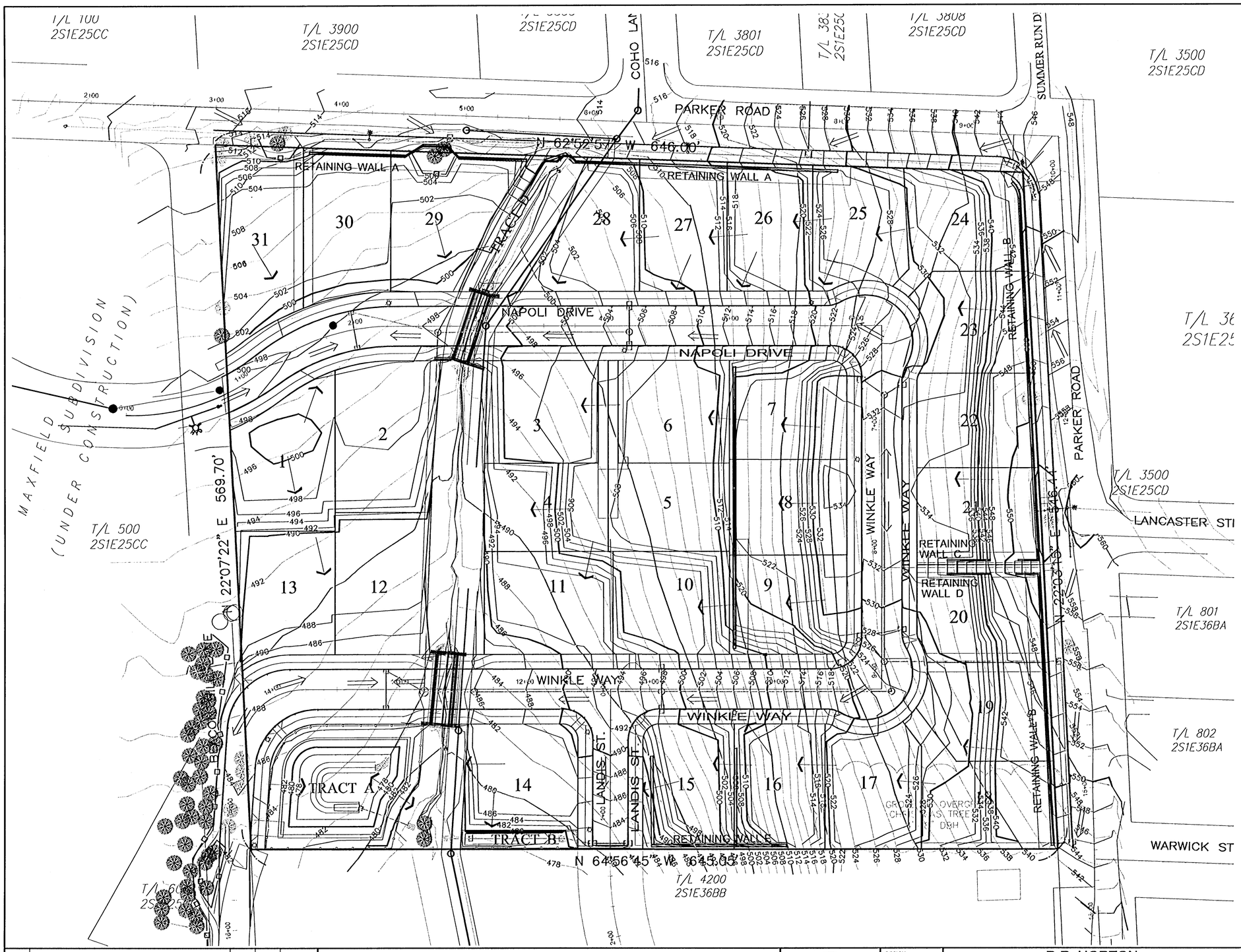

LEGEND

- 102 EXISTING GROUND CONTOUR (2FT)
- 100 EXISTING GROUND CONTOUR (10FT)
- 102 FINISHED GRADE CONTOUR (2FT)
- 100 FINISHED GRADE CONTOUR (10FT)
- EXISTING TREE (TO BE SAVED)
- EXISTING TREE (TO BE REMOVED)
- TREE PROTECTION FENCING
- DRAINAGE FLOW DIRECTION (STREET)
- DRAINAGE FLOW DIRECTION (OVERLAND)

GRADING NOTES:

1. ALL STRIPPINGS SHALL BE REMOVED FROM THE ROADWAY AND CUT/FILL AREAS AND TEMPORARILY STOCKPILED. THE HEIGHT OF THE STOCKPILE SHALL NOT EXCEED 6 FEET, AS MEASURED FROM THE EXISTING GROUND.
2. STRIPPINGS SHALL BE PLACED BACK OVER THE FINISH LOTS AT A DEPTH NOT TO EXCEED 6-INCHES, COMPACTED, AND SHAPED TO DRAIN.
3. THE STOCKPILED STRIPPINGS SHALL BE COVERED, OR OTHERWISE PROTECTED FROM EROSION.
4. ALL GRADING SHALL MATCH THE EXISTING GROUND NO CLOSER THAN 2 FEET FROM ADJACENT PROPERTY OWNERS OR MORE AS REQUIRED BY THE UNIFORM BUILDING CODE.

0 40 80
SCALE: 1"=40'

REV.	DESCRIPTION	SUB.	APPR.	DATE
5	AS BUILT	WNH	JGH	5/08/07
4	CHANGED TREE ALONG PARKER TO "CUT", REVISED WINKLE WAY STREET GRADES	TCM	JRH	1/30/07
3	REVISED PER CITY COMMENTS	TCM	JRH	9/20/06
2	REVISED PER NEW BOUNDARY AND CITY COMMENTS	TCM	JRH	9/01/06
1	REVISED RETAINING WALL AND S/W TO SAVE TREES	TCM	JRH	8/28/06

REFER TO TRACING FOR LATEST REVISION

REFERENCE INFORMATION AND NOTES:
REFER TO THE SEPARATE PLAN SET FOR EROSION AND SEDIMENTATION CONTROL

AS BUILT
A/B DENOTES "AS BUILT" DIMENSIONS

REGISTERED PROFESSIONAL ENGINEER 6219 OREGON JULY 12, 1968 JAMES R. HARRIS
EXPIRES JUNE 30th, 2007

DESIGN	TCM
DRAFTED	TCM
CHECKED	JRH
DATE	6/07/06

D.R. HORTON
c/o J.T. SMITH COMPANIES
4386 SW MACADAM AVE., SUITE 102
PORTLAND, OR 97239

HARRIS-McMONAGLE ASSOCIATES, INC.
ENGINEERS - SURVEYORS
12555 S.W. HALL BLVD.
TIGARD, OR 97223-8287
PHONE: (503) 639-3453

PARKER CREST
4300 PARKER ROAD
GRADING PLAN

SCALE 1"=40'
DWG. NAME 4.GRADE
SHEET 4 OF 25

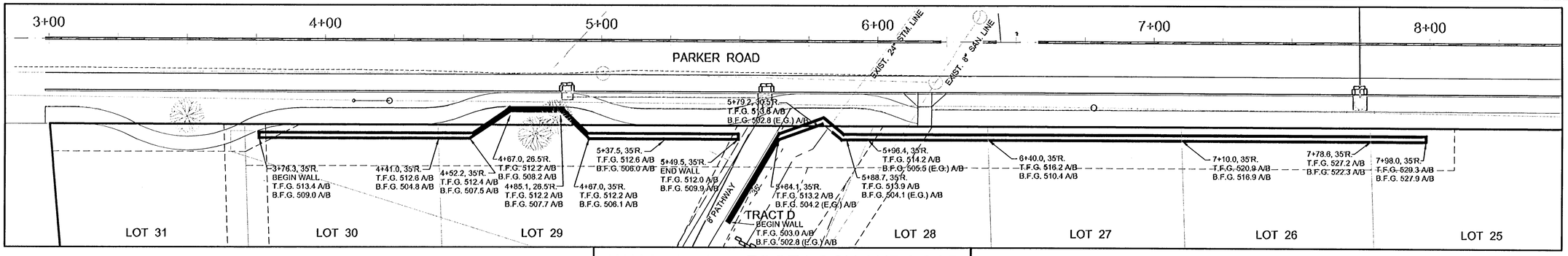

WALL A - 4-11 FOOT LOCK AND LOAD

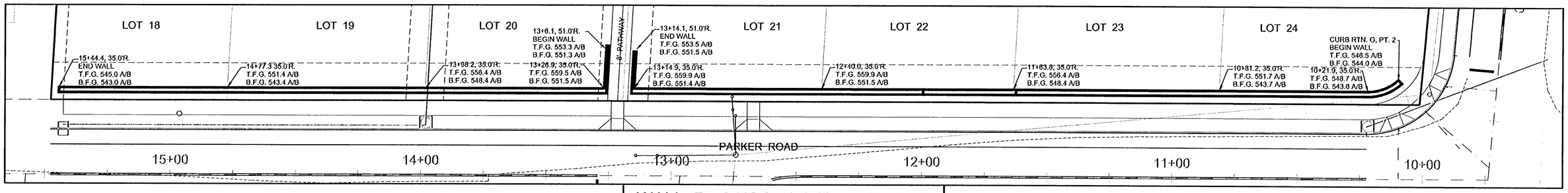

WALL B - 8 FOOT LOCK AND LOAD

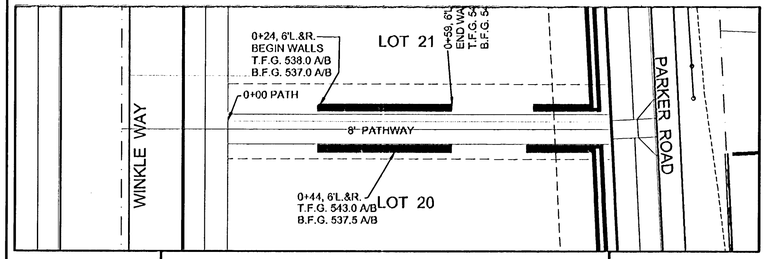

WALLS C & D - LOCK AND LOAD

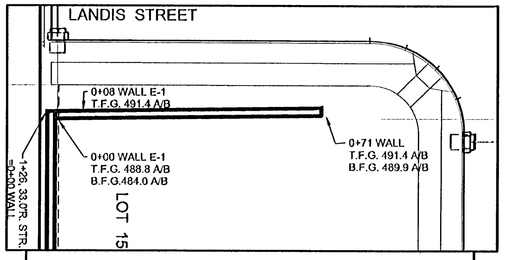

WALL E-1 - LOCK AND LOAD

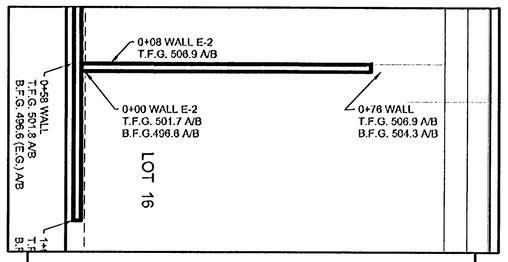

WALL E-2 - LOCK AND LOAD

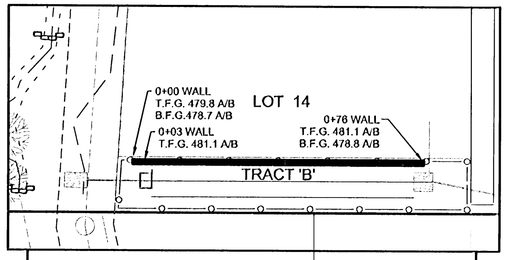

WALL G - LOCK AND LOAD

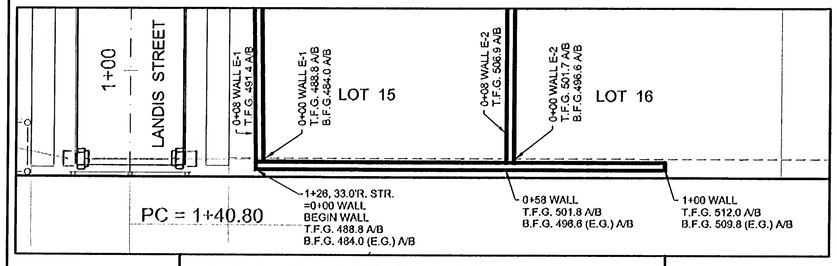

WALL E - 4 FOOT LOCK AND LOAD

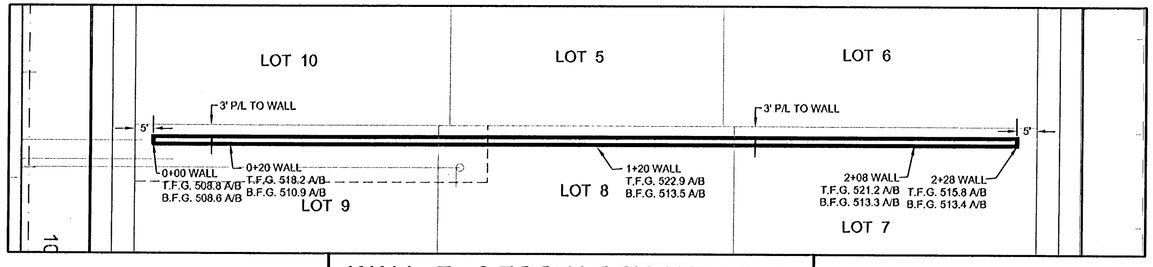

WALL F - 8 FOOT LOCK AND LOAD

LEGEND:

T.F.G. TOP OF WALL FINISHED GRADE

B.F.G. BOTTOM OF WALL FINISHED GRADE (ABOVE WALL FOOTING)

E.G. EXISTING GROUND

NOTE: WALL STATIONS AND OFFSETS REFER TO EXPOSED WALL FACE AT FOOT OF WALL

0 20 40

SCALE: 1"=20'

REV.	DESCRIPTION	SUB.	APPR.	DATE
6	AS BUILT	WNH	JOH	5/08/07
5	ADDED WALLS E-1 & E-2	WNH	TCM	3/28/07
4	REMOVED TREE ALONG WALL B, CONNECTED WALL ENDS	TCM	JRH	1/30/07
3	REVISED PER NEW BOUNDARY	TCM	JRH	9/01/06
2	ADDED WALL "F"	TCM	JRH	8/2/06
1	REVISED WALL ELEVATIONS, ADDED HEADWALLS	TCM	JRH	7/31/06

REFER TO TRACING FOR LATEST REVISION

REFERENCE INFORMATION AND NOTES:

AS BUILT
A/B DENOTES "AS BUILT" DIMENSIONS

REGISTERED PROFESSIONAL ENGINEER 6219 OREGON MAY 12, 1988 JAMES R. HARRIS
EXPIRES JUNE 30th, 2007

DESIGN	TCM
DRAFTED	TCM
CHECKED	JRH
DATE	6/07/06

D.R. HORTON
c/o J.T. SMITH COMPANIES
4388 SW MACADAM AVE., SUITE 102
PORTLAND, OR 97239

HARRIS–McMONAGLE ASSOCIATES, INC.
ENGINEERS – SURVEYORS
12555 S.W. HALL BLVD.
TIGARD, OR 97223-8287
PHONE: (503) 639-3453

PARKER CREST
4300 PARKER ROAD

RETAINING WALL DETAILS

SCALE: AS SHOWN
DWG. NAME: 5.G-DET
SHEET 5 OF 25

TECHNICAL SPECIFICATION FOR
LOCK+LOAD RETAINING WALLS

PART 1: GENERAL

1.01 A Professional Engineer, with experience in Geotechnical Engineering and the design and construction of Mechanically Stabilized Earth Walls shall review the suitability of the design for the intended use and to provide field observation during construction This includes the review of the bearing stratum by the Geotechnical Engineer, verification of the specified soil compaction in the reinforcing zone, and the review and verification that the geogrids were installed per plan. The Geotechnical Engineer shall evaluate all soil parameters during construction.

1.02 The design of these walls was prepared for the exclusive use of Key West Retaining Systems, Inc. The use of these plans by any others shall be approved in writing by The Engineer prior to construction.

1.03 The construction of LOCK+LOAD retaining walls shall be performed by either a Contractor that has been approved as knowledgeable and experienced in the construction of MSE retaining walls using LOCK+LOAD or a Representative of LOCK+LOAD shall be present at the beginning of construction until it has been determined by them that the Contractor is capable of constructing this type of wall system.

1.04 The design of LOCK+LOAD Mechanically Stabilized Earth Retaining Walls is based on the U.S. Department of Transportation Federal Highway Administration's publication No. FWHA-NHI-00-043 "Mechanically Stabilized Earth Walls and Reinforced Soil Slopes Design and Construction Guidelines" which has been adopted by the latest American Association of Highway and Transportation Officials (AASHTO) and the National Concrete and Masonry Association (NCMA) codes.

1.05 Design compliance is made with reference to report #05-9475, dated October 26, 2005, prepared by GeoPacific Engineering, Inc., with the assumption that the foundation soils that are capable of supporting a bearing pressure of 4000 psf with the following design parameters.

Internal Angle of Friction for Reinforced Zone = 30 degrees

Internal Angle of Friction for Retained Zone = 28 degrees

Internal Angle of Friction for Foundation Zone = 28 degrees; c = 250 psf

A Geotechnical Engineer shall be retained to verify these assumptions.

1.06 Design Compliance is made with the following Factors of Safety:

- Sliding FS > 1.5
- Bearing Capacity FS > 2.0
- Overturning FS > 2.0
- Internal Stability FS > 1.5
- Seismic Stability % of Static FS FS > 75

1.07 The work described and shown involves the supply and installation of reinforced soil retaining walls. The concrete wall panel and counterfort create a LOCK+LOAD Retaining Module. Counterfort and Geo-grid are the types of soil reinforcement. The work includes but is not limited to:

a. excavation to the lines and grades shown on the drawing; (or as required by the Geotechnical Engineer, to obtain adequate bearing capacities) excavation to be coordinated with the General Contractor.
b. supply and installation of geogrid reinforcement;
c. supply and installation of drainage fill and piping;
d. supply and installation of segmental LOCK+LOAD Modules
e. supply and installation of reinforced soil fill.
f. removal of all deleterious materials to the satisfaction of the Geotechnical Engineer.

1.08 The walls will be installed in existing, natural, undisturbed soil or placed on a ?" rock base as determined by the Geotechnical Engineer.

1.09 The Contractor shall confirm the locations and conditions of all man-made elements which may be affected or damaged by the Work. Elements which may be affected or damaged by the Work must be reported to the Engineer in advance of the work beginning. The Engineer may modify the design or approve of changes to installation techniques proposed by the Contractor to preclude damage or conflict with existing elements.

1.10 The Contractor shall verify all dimensions and report discrepancies to the Engineer.

1.11 A Global Slope Stability or a Differential Settlement analysis has not been completed by the Engineer. The Geotechnical Engineer shall be consulted if such analysis is required.

PART 2: MATERIALS

2.01 Concrete Panels and Counterforts are locked together to form a "Retaining Module". The retaining walls have been designed on the basis of Lock+Load retaining wall "Modules". Modules are to be purchased from a licensed LOCK+LOAD manufacturer. The LOCK+LOAD trademark on each pallet identifies LOCK+LOAD products. Information on the purchase of LOCK+LOAD and a complete list of components can be Obtained through:
Lock & Load Retaining Walls Ltd.
Tel. (877) 901-9990 Website
www.lock-load.com
<http: //www.lock-load.com>

2.02 Geogrid – The retaining walls have been designed to be erected as shown on the Plans. Other geogrid materials may be considered suitable provided that they meet the specification and requirements of the design and are approved in advance by the Engineer.

2.03 Modular Fill – The fill immediately behind the LOCK+LOAD panel and surrounding the counterfort shall be "dense graded" select free draining material.

2.04 Drainage Fill. Drainage fill placed around and above the perforated drainage pipe shall be granular aggregate composed of inert, clean, tough, durable particles of crushed rock capable of with standing the deleterious effects of exposure to water, freeze-thaw, handling, spreading and compacting. The aggregate particles shall be uniform in quality and free from an excess of flat or elongated pieces. The drainage fill shall consist of round or angular rock between 3/4 inch and 1 inch.

2.05 Reinforced Backfill. As shown on the Plans or as approved by the Geotechnical Engineer. The Reinforced backfill shall have an angle of internal friction of 34o or greater and a moist density of 125 pcf, when compacted to the specification herein.

PART 3 EXECUTION

3.01 The Contractor shall excavate to the lines and grades shown on the construction drawings. A Geotechnical Engineer shall inspect the excavation and approve the foundation prior to the placement of the levelling pad or retaining modules.

3.02 Over-excavation of deleterious soil or rock as recommended by the Geotechnical Engineer shall be replaced with Reinforced and Retained Backfill meeting the specifications of Section 2.04 above, and compacted to 90% of ASTM D1557 (Modified Proctor Density) within 2% of the optimum moisture content of the soil.

3.03 The first course of concrete Lock+Load Modules shall be placed on the level compacted foundation and the alignment and level checked.

3.04 Modules shall be placed with the top of the panel level and parallel to the wall face. The counterfort base installs horizontal and perpendicular to the face of the retaining wall.

3.05 Geogrid shall be oriented with the highest strength axis perpendicular to the wall alignment.

3.06 Geogrid reinforcement shall be placed at the elevations and to the extent shown on the Plans beginning at the back of the LOCK+LOAD panels and the top of the counterfort.

3.07 The geogrid shall be laid horizontally in the direction perpendicular to the face of the retaining wall and parallel to the allignment of the "Modules". The geogrid shall be pulled taut, free of wrinkles and anchored prior to backfill placement on the geogrid.

3.08 The geogrid reinforcement shall be continuous throughout their embedment lengths. Spliced connections between shorter pieces of geogrid are not permitted.

3.09 The drainage pipe discharge points shall be free and clear to allow drainage from the pipes.

3.10 Reinforced and Retained backfill shall be placed, spread and compacted in such a manner that minimizes the development of slack in the geogrid.

3.11 Connection, Reinforced and Retained backfill shall be placed and compacted in lifts not to exceed 8 inches where light compaction equipment (less than 1000Lb vibrating plate) is used and not more than 16 inches where heavy compaction equipment is used. compact over tail of counterfort then to the panel back and finally away from the retaining wall structure toward the end of the geogrid.

3.12 All backfill shall be compacted to 90 percent of the maximum density as determined by ASTM D1557 (Modified Proctor) or equivalent. The moisture content of the backfill material prior to and during compaction shall be uniformly distributed throughout each layer and shall be within 2 percent of the optimum moisture content.

3.13 Tracked construction equipment shall not be operated directly upon the geogrid reinforcement. A minimum fill thickness of 6 inches is required prior to operation of tracked vehicles over the geogrid. Tracked vehicles should not turn while on the geogrid to prevent tracks from displacing the fill and geogrid and damage or slack to result in the geogrid.

3.14 Rubber tired equipment may pass over the geogrid reinforcement at slow speeds less than 5 mph. Sudden braking and sharp turning shall be avoided.

3.15 At the end of each day of operation, the Contractor shall slope the last lift of reinforced backfill away from the wall face. The units to direct runoff away from the wall face. The Contractor shall not allow surface runoff from adjacent areas to enter the wall construction site.

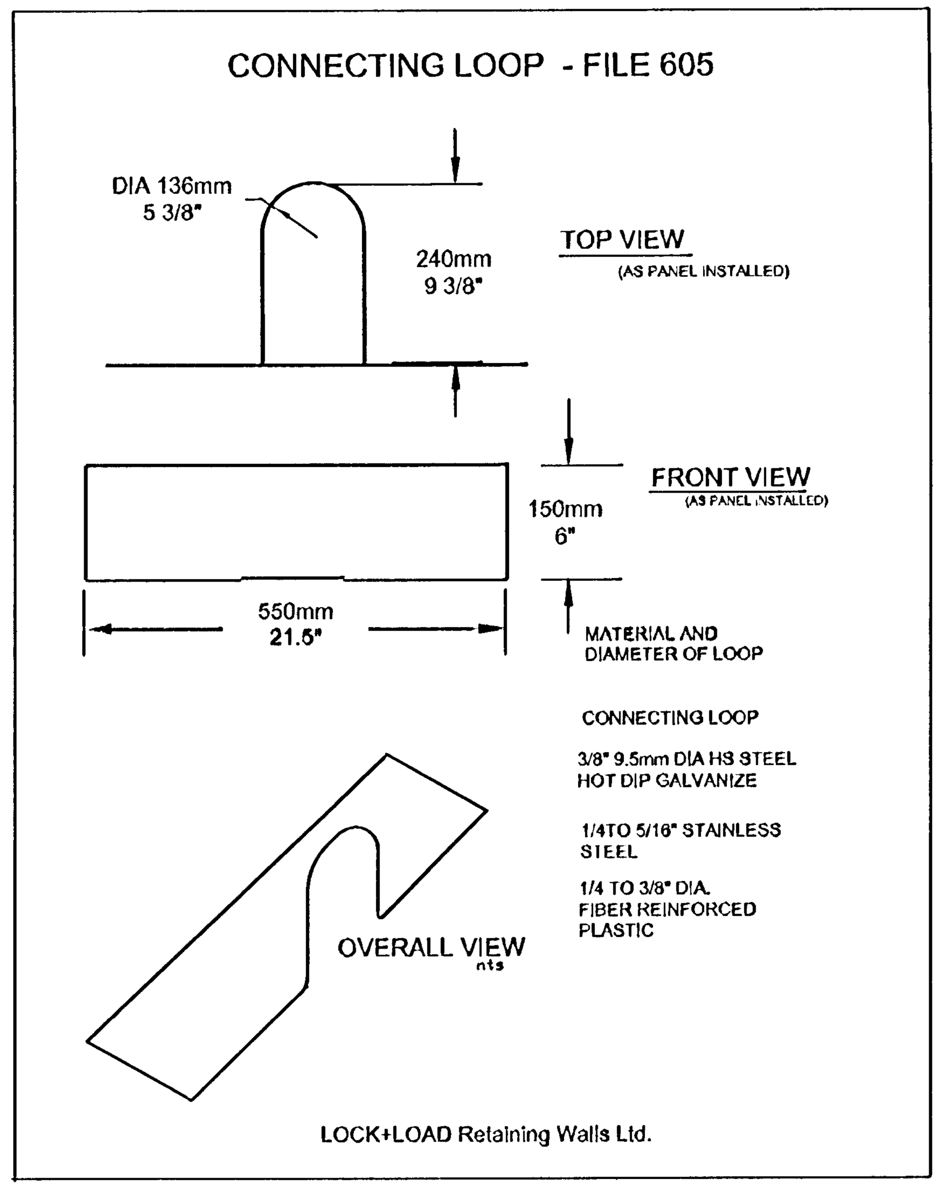

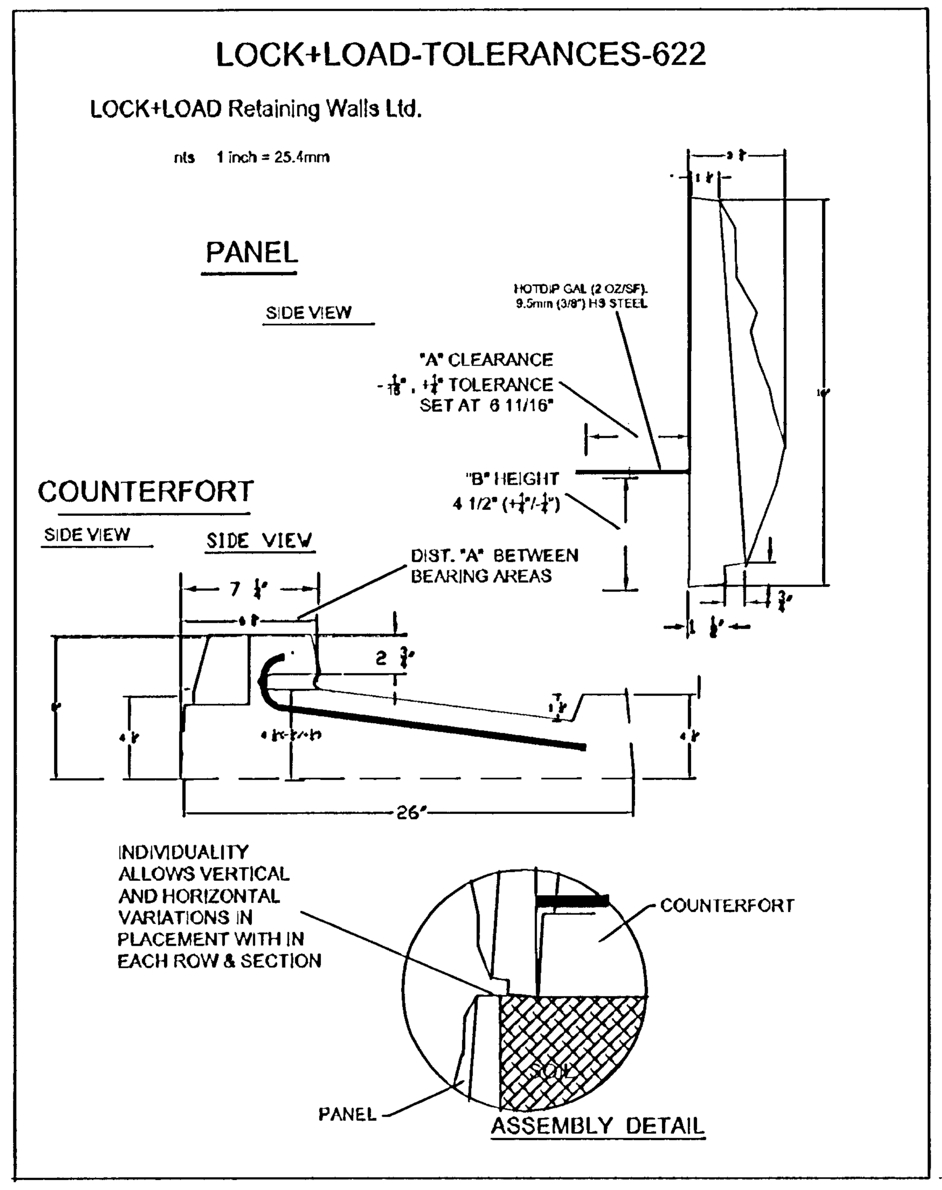

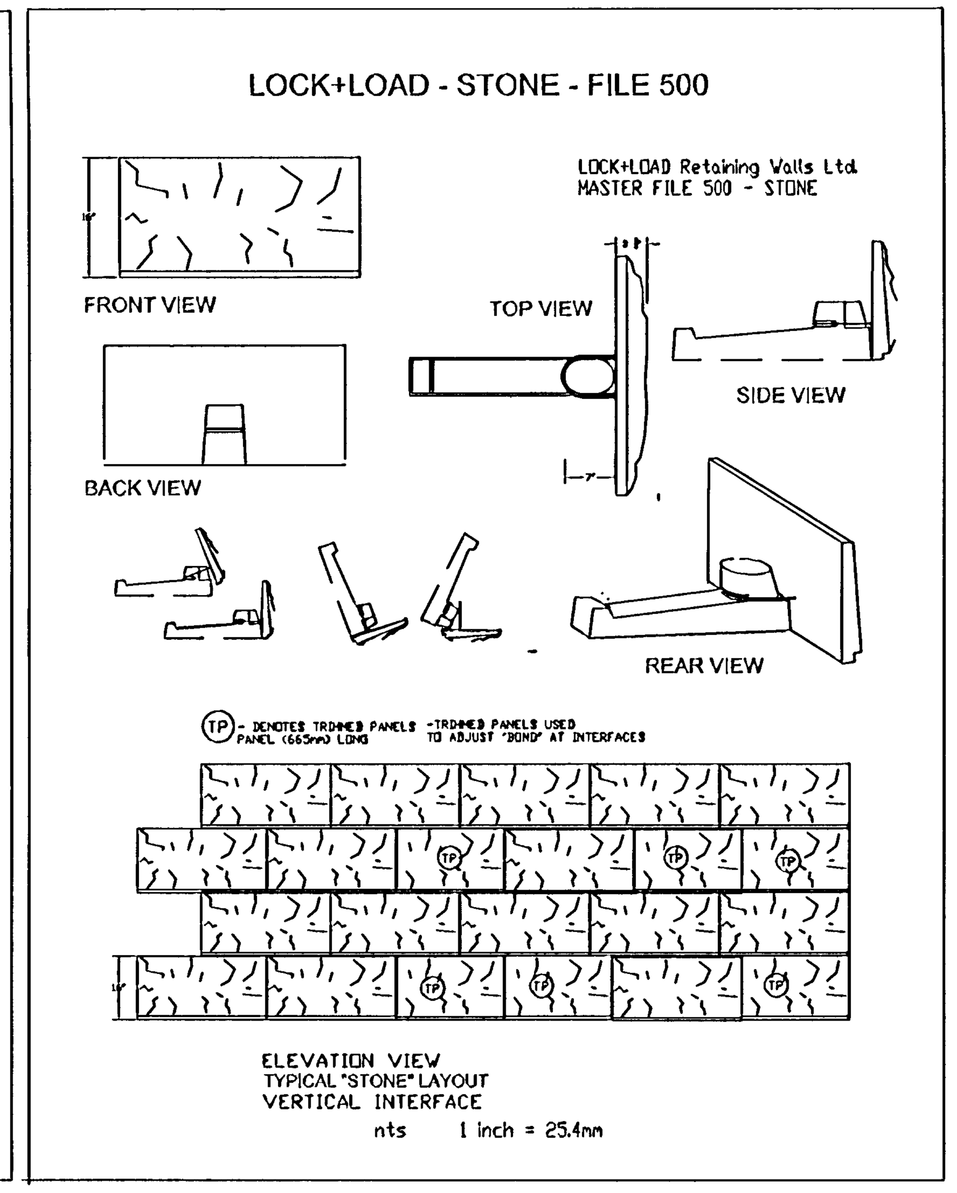

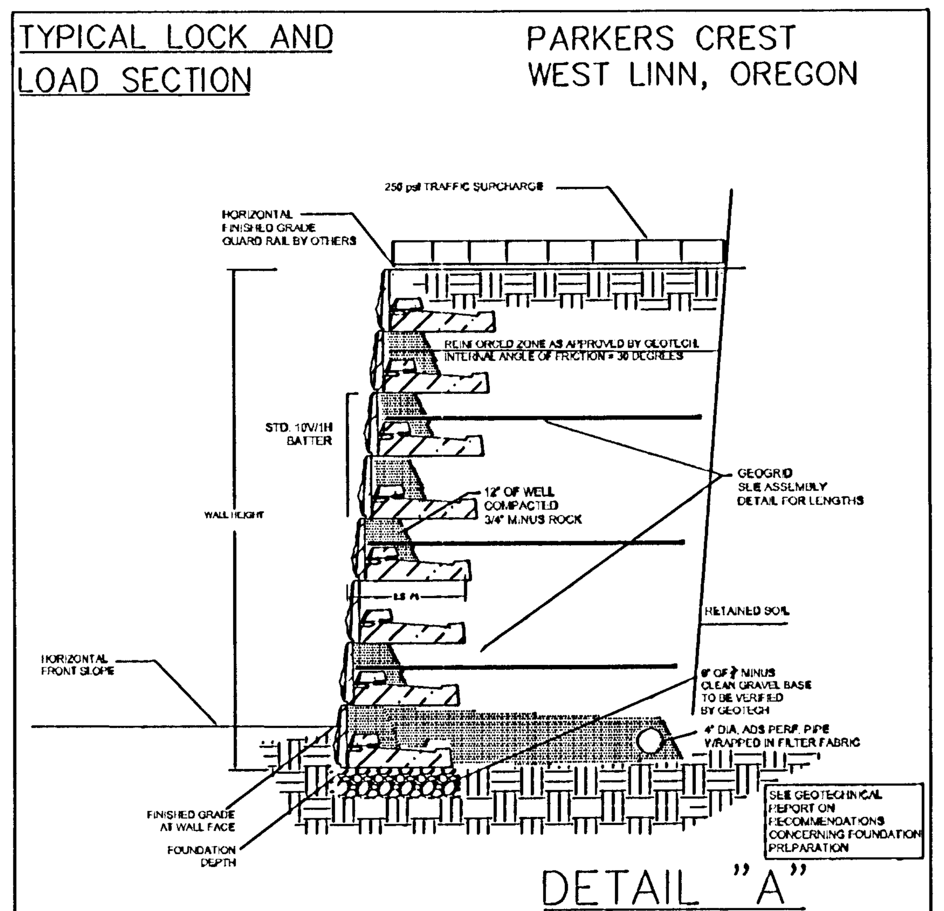

1. Wall Height (H) is the total height from top including embedment
2. Minimum embedment at toe of wall is 30" for a 2H:1V front slope; 20" for a 3H:1V front slope;. 16" for a 4H:1V front slope or less; or as required by the Geotechnical Engineer.
3. Reinforced Soil - Internal Angle of Friction = 30 degrees; Unit Weight = 120 #/Ft^3
   Retained Soil - Internal Angle of Friction = 28 degrees; Unit Weight = 110 #/Ft^3
   Foundation Soil - Internal Angle of Friction = 28 degrees; Unit Weight = 110 #/Ft^3; c = 250 psf
4. Finished grade to provide for positive drainage away from wall.
5. Foundation Row set on graded and compact soil or granular pad to be confirmed By Geotech
6. All Backfill to be compacted to 90% max. Density (Modified Proctor)
7. Grading at top of wall and Embedment as specified
8. A Global Analysis or Settlement Study is not part of this Design.

PARKER CREST
WEST LINN, OREGON

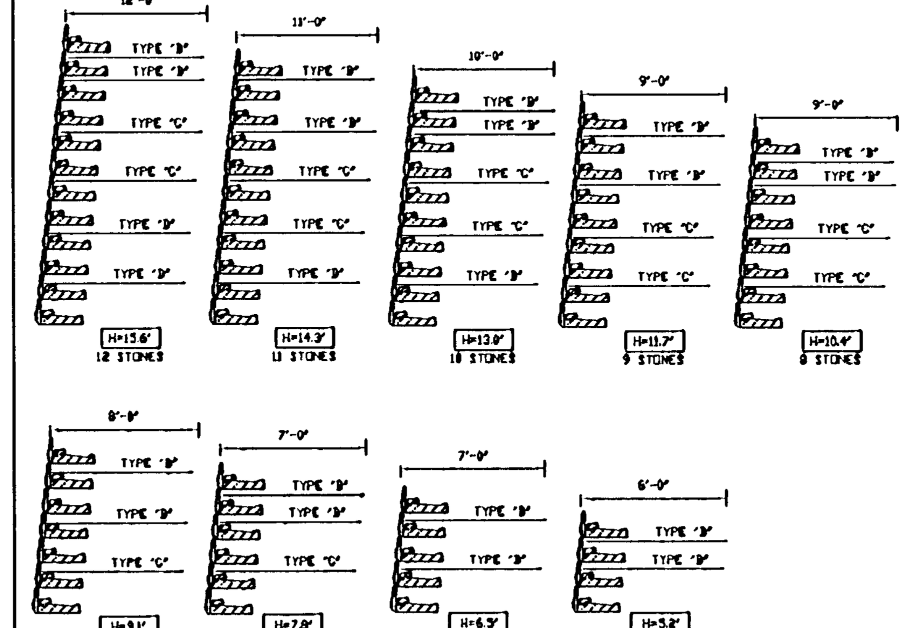

LOCK & LOAD ASSEMBLY DETAIL

EQUIVALENT GEOGRID TABLE

GEOGRID TYPE	GEOGRID ALTERNATIVES LTDS	SYNTEEN	MACCAFERRI	FORTRAC	TENSAR	MIRAGRID
TYPE "A"	850 #	SF 20	WG04	20/13-20	UX 800HS	2XT
TYPE "B"	1550 #	SF 35	WG05	35/20-20	UX1100HS	3XT
TYPE "C"	2250 #	SF 55	WG09	55/30-20	UX1500HS	5XT
TYPE "D"	3500#	SF 80	WG12	110/30-20	UX1600HS	10XT
TYPE "E"	4500 #	SF 90	WG15	150/	UX1700HS	18XT
TYPE "F"	5500 #	SF 110	WG20	150/	UX1700HS	20XT

REV.	DESCRIPTION	SUB.	APPR.	DATE

REFER TO TRACING FOR LATEST REVISION

REFERENCE INFORMATION AND NOTES:
REFER TO SEPARATELY BOUND CALCULATIONS BY THE STRUCTURAL ENGINEER FOR FURTHER WALL INFORMATION

DESIGN TCM
DRAFTED TCM
CHECKED JRH
DATE 7/31/06

D.R. HORTON
c/o J.T. SMITH COMPANIES
4386 SW MACADAM AVE., SUITE 102
PORTLAND, OR 97239

HARRIS-McMONAGLE ASSOCIATES, INC.
ENGINEERS - SURVEYORS
12555 S.W. HALL BLVD.
TIGARD, OR 97223-6287
PHONE: (503) 639-3453

PARKER CREST
4300 PARKER ROAD

RETAINING WALL DETAILS

SCALE AS SHOWN
DWG. NAME 5.G-DET

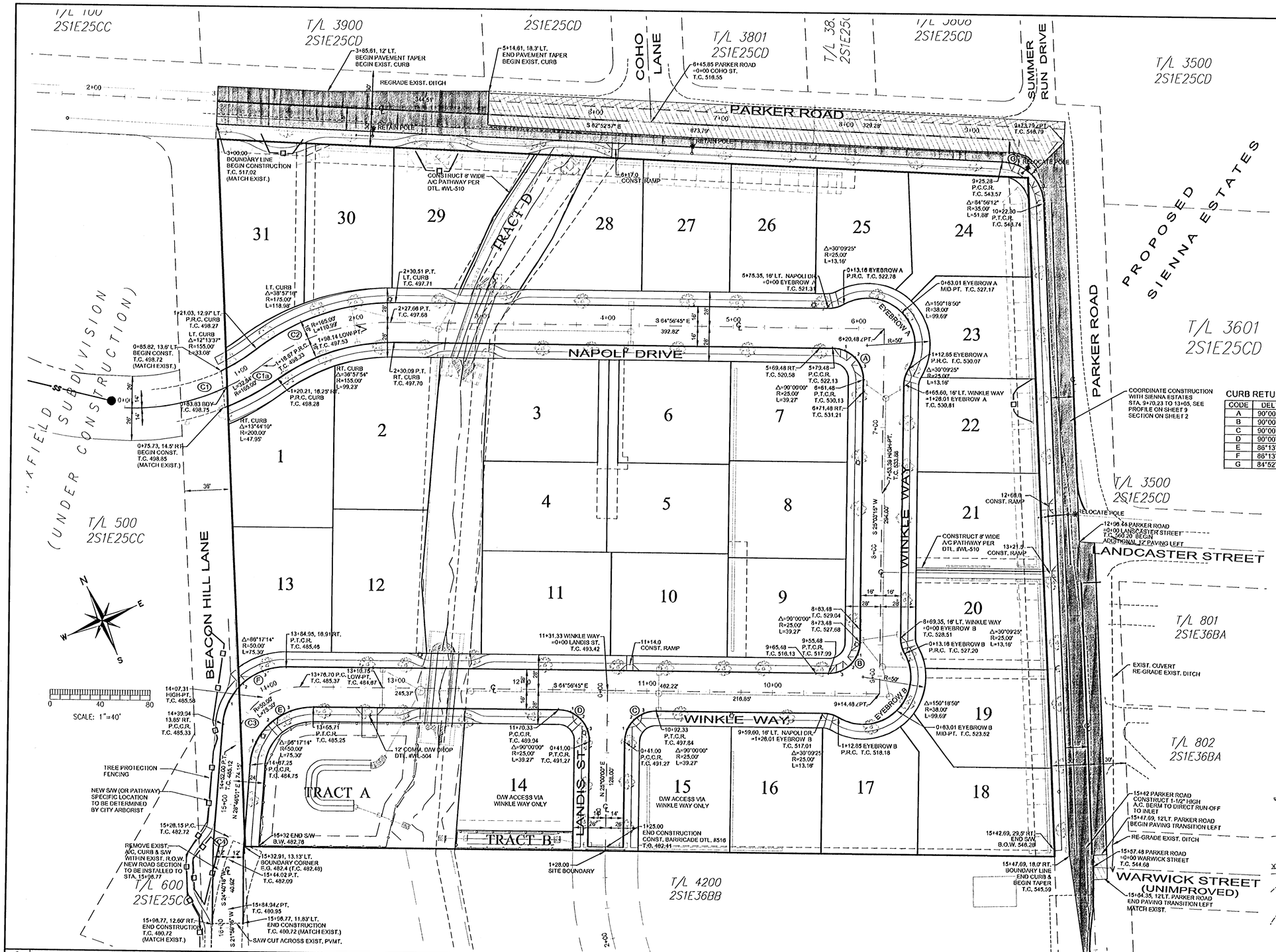

STREET LIGHTS:

- 14 FT. MOUNTING HEIGHT, BLACK, NON-FLUTED, FIBERGLASS LIGHT POLE AND A 100W, HPS, ACORN STYLE FIXTURE
- 25 FT. MOUNTING HEIGHT, 6 FT. MAST ARM ON EXISTING UTILITY POLE WITH A 200W HPS, COBRA STYLE FIXTURE AND PHOTO CELL

ALL STREET LIGHTS, WIRING AND CONTROLLERS SHALL CONFORM TO P.G.E. OPTION 'B'

PROPOSED STREET TREES:

PROPOSED LOCATION

THE CITY PARKS DEPARTMENT WILL PLANT ALL STREET TREES AND THE OWNER WILL PAY THE DEPARTMENT THE APPROPRIATE FEE (CURRENTLY $150 PER TREE) PRIOR TO FINALIZING THE SUBDIVISION.

STREET CONSTRUCTION NOTES:

1. ALL WORK AND MATERIALS SHALL CONFORM TO THE CITY OF WEST LINN PUBLIC WORKS SPECIFICATIONS.
2. THE CONTRACTOR SHALL NOTIFY ALL UNDERGROUND UTILITY COMPANIES FOR THEIR RESPECTIVE FIELD LOCATIONS PER O.R.S.757.541-.571. U.S.A. LOCATOR PHONE NUMBER (503) 681-7044.
3. ALL BRUSH, TREES, AND DEMOLITION MATERIALS SHALL BE REMOVED FROM THE SITE.
4. A 4" WEEP HOLE SHALL BE PROVIDED THROUGH THE CURB FOR FUTURE LOT DRAINAGE WITHIN TWO FEET OF EACH FRONT LOT CORNER.
5. ALL EXISTING MANHOLES IN STREETS ARE TO BE ADJUSTED TO FINISHED GRADE.
6. ALL CURBS CONSTRUCTED WILL BE CURB & GUTTER UNLESS OTHERWISE NOTED ON PLANS.

STREET GRADE / SPRINKLER NOTE:

ALL HOMES ARE REQUIRED TO HAVE FIRE SUPPRESSION SPRINKLERS PER T.V.F.D. CODE (STREET GRADE >10%).

COORDINATE CONSTRUCTION WITH SIENNA ESTATES STA. 9+70.23 TO 13+05, SEE PROFILE ON SHEET 9 SECTION ON SHEET 2

CURB RETURN DATA:

CODE	DELTA	RADIUS	LENGTH	-0+10	P.C.C.R.	1	2	3	P.T.C.R.	0+10
A	90°00'00"	25.00	39.27	520.58	522.13	524.07	526.21	528.35	530.13	531.21
B	90°00'00"	25.00	39.27	529.04	527.68	525.51	522.92	520.33	517.99	516.13
C	90°00'00"	25.00	39.27	N/A	491.27	492.55	494.43	496.37	497.84	N/A
D	90°00'00"	25.00	39.27	N/A	489.94	490.67	491.45	491.81	491.27	N/A
E	86°13'59"	50.00	75.25	N/A	484.75	485.20	485.40	485.39	485.25	N/A
F	86°13'59"	50.00	75.25	N/A	485.33	485.57	485.66	485.61	485.46	N/A
G	84°52'57"	35.00	51.85	N/A	543.57	544.88	546.47	547.91	548.74	N/A

STREET CENTERLINE CURVE DATA:

CODE	DELTA	RADIUS	LENGTH
C1	40°30'45"	165.00'	116.67'
C1a	11°24'11"	165.00'	32.84'
C2	38°32'29"	165.00'	110.99'
C3	86°17'14"	50.00'	75.30'
C4	04°05'43"	250.00'	17.87'

PARKER ROAD STREET AREAS:

- NEW STREET SECTION
- PAVEMENT OVERLAY ONLY
- GRIND PAVEMENT (6' WIDE) & OVERLAY ONLY

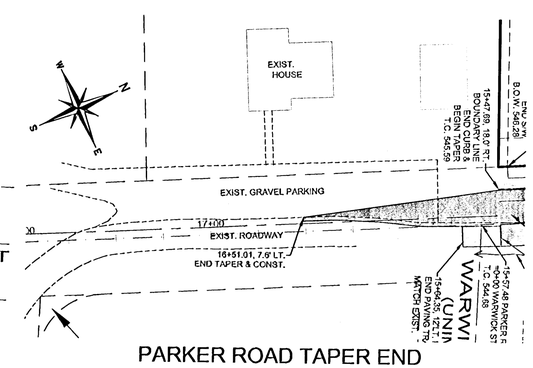

PARKER ROAD TAPER END

REV.	DESCRIPTION	SUB.	APPR.	DATE
7	AS BUILT	WNH	JGH	5/08/07
6	REVISED STREET GRADES & POND D/W DUE TO CULVERT A CHANGE	TCM	JRH	1/30/07
5	REVISED PER CITY COMMENTS	TCM	JRH	9/20/06
4	REVISED PER NEW BOUNDARY AND CITY COMMENTS	TCM	JRH	9/01/06
3	ADDED TREE PROTECTION FENCING	TCM	JRH	8/02/06
2	ADDED PAVEMENT TAPER STATIONS, NOTES	TCM	JRH	8/02/06
1	REVISED PER CITY REDLINES	TCM	JRH	7/31/06

REFER TO TRACING FOR LATEST REVISION

REFERENCE INFORMATION AND NOTES:

AS BUILT
A/B DENOTES "AS BUILT" DIMENSIONS

REGISTERED PROFESSIONAL ENGINEER 6219 OREGON JULY 12, 1968 JAMES R. HARRIS
EXPIRES JUNE 30th, 2007

DESIGN: TCM
DRAFTED: TCM
CHECKED: JRH
DATE: 6/07/06

D.R. HORTON
c/o J.T. SMITH COMPANIES
4386 SW MACADAM AVE., SUITE 102
PORTLAND, OR 97239

HARRIS-McMONAGLE ASSOCIATES, INC.
ENGINEERS - SURVEYORS
12555 S.W. HALL BLVD.
TIGARD, OR 97223-6287
PHONE: (503) 639-3453

PARKER CREST
4300 PARKER ROAD
STREET PLAN

SCALE: 1"=40'
DWG. NAME: 6.STREET
SHEET 7 OF 25

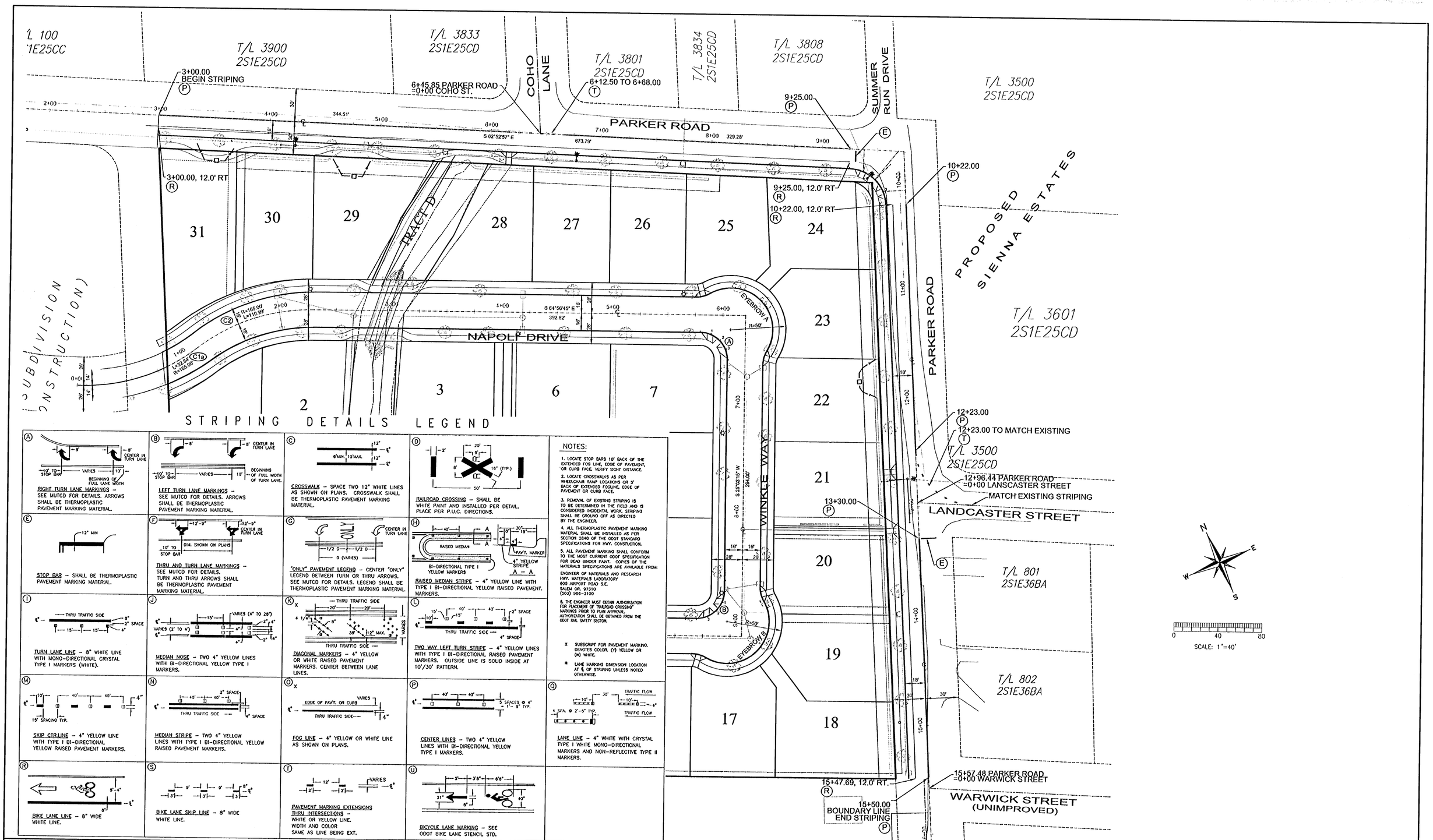

STRIPING DETAILS LEGEND

(A) RIGHT TURN LANE MARKINGS – SEE MUTCD FOR DETAILS. ARROWS SHALL BE THERMOPLASTIC PAVEMENT MARKING MATERIAL.

(B) LEFT TURN LANE MARKINGS – SEE MUTCD FOR DETAILS. ARROWS SHALL BE THERMOPLASTIC PAVEMENT MARKING MATERIAL.

(C) CROSSWALK – SPACE TWO 12" WHITE LINES AS SHOWN ON PLANS. CROSSWALK SHALL BE THERMOPLASTIC PAVEMENT MARKING MATERIAL.

(D) RAILROAD CROSSING – SHALL BE WHITE PAINT AND INSTALLED PER DETAIL. PLACE PER P.U.C. DIRECTIONS.

(E) STOP BAR – SHALL BE THERMOPLASTIC PAVEMENT MARKING MATERIAL.

(F) THRU AND TURN LANE MARKINGS – SEE MUTCD FOR DETAILS. TURN AND THRU ARROWS SHALL BE THERMOPLASTIC PAVEMENT MARKING MATERIAL.

(G) "ONLY" PAVEMENT LEGEND – CENTER "ONLY" LEGEND BETWEEN TURN OR THRU ARROWS. SEE MUTCD FOR DETAILS. LEGEND SHALL BE THERMOPLASTIC PAVEMENT MARKING MATERIAL.

(H) RAISED MEDIAN STRIPE – 4" YELLOW LINE WITH TYPE I BI-DIRECTIONAL YELLOW RAISED PAVEMENT MARKERS.

(I) TURN LANE LINE – 8" WHITE LINE WITH MONO-DIRECTIONAL CRYSTAL TYPE I MARKERS (WHITE).

(J) MEDIAN NOSE – TWO 4" YELLOW LINES WITH BI-DIRECTIONAL YELLOW TYPE I MARKERS.

(K) DIAGONAL MARKERS – 4" YELLOW OR WHITE RAISED PAVEMENT MARKERS. CENTER BETWEEN LANE LINES.

(L) TWO WAY LEFT TURN STRIPE – 4" YELLOW LINES WITH TYPE I BI-DIRECTIONAL RAISED PAVEMENT MARKERS. OUTSIDE LINE IS SOLID INSIDE AT 10'/30' PATTERN.

(M) SKIP CTR.LINE – 4" YELLOW LINE WITH TYPE I BI-DIRECTIONAL YELLOW RAISED PAVEMENT MARKERS.

(N) MEDIAN STRIPE – TWO 4" YELLOW LINES WITH TYPE I BI-DIRECTIONAL YELLOW RAISED PAVEMENT MARKERS.

(O) FOG LINE – 4" YELLOW OR WHITE LINE AS SHOWN ON PLANS.

(P) CENTER LINES – TWO 4" YELLOW LINES WITH BI-DIRECTIONAL YELLOW TYPE I MARKERS.

(Q) LANE LINE – 4" WHITE WITH CRYSTAL TYPE I WHITE MONO-DIRECTIONAL MARKERS AND NON-REFLECTIVE TYPE II MARKERS.

(R) BIKE LANE LINE – 8" WIDE WHITE LINE.

(S) BIKE LANE SKIP LINE – 8" WIDE WHITE LINE.

(T) PAVEMENT MARKING EXTENSIONS THRU INTERSECTIONS – WHITE OR YELLOW LINE. WIDTH AND COLOR SAME AS LINE BEING EXT.

(U) BICYCLE LANE MARKING – SEE ODOT BIKE LANE STENCIL STD.

NOTES:

1. LOCATE STOP BARS 10' BACK OF THE EXTENDED FOG LINE, EDGE OF PAVEMENT, OR CURB FACE. VERIFY SIGHT DISTANCE.
2. LOCATE CROSSWALKS AS PER WHEELCHAIR RAMP LOCATIONS OR 5' BACK OF EXTENDED FOGLINE, EDGE OF PAVEMENT OR CURB FACE.
3. REMOVAL OF EXISTING STRIPING IS TO BE DETERMINED IN THE FIELD AND IS CONSIDERED INCIDENTAL WORK. STRIPING SHALL BE GROUND OFF AS DIRECTED BY THE ENGINEER.
4. ALL THERMOPLASTIC PAVEMENT MARKING MATERIAL SHALL BE INSTALLED AS PER SECTION 2840 OF THE ODOT STANDARD SPECIFICATIONS FOR HWY. CONSTUCTION.
5. ALL PAVEMENT MARKING SHALL CONFORM TO THE MOST CURRENT ODOT SPECIFICATION FOR BEAD BINDER PAINT. COPIES OF THE MATERIALS SPECIFICATIONS ARE AVAILABLE FROM:
   ENGINEER OF MATERIALS AND RESEARCH
   HWY. MATERIALS LABORATORY
   800 AIRPORT ROAD S.E.
   SALEM OR. 97310
   (503) 986-3100
6. THE ENGINEER MUST OBTAIN AUTHORIZATION FOR PLACEMENT OF "RAILROAD CROSSING" MARKINGS PRIOR TO PLAN APPROVAL. AUTHORIZATION SHALL BE OBTAINED FROM THE ODOT RAIL SAFETY SECTION.

X SUBSCRIPT FOR PAVEMENT MARKING. DENOTES COLOR. (Y) YELLOW OR (W) WHITE.

* LANE MARKING DIMENSION LOCATION AT ℄ OF STRIPING UNLESS NOTED OTHERWISE.

REV.	DESCRIPTION	SUB.	APPR.	DATE
2	AS-BUILT	WNH	JRH	5/08/07
1	ADDED STRIPING PLAN	WNH	JRH	4/18/07

REFER TO TRACING FOR LATEST REVISION

REFERENCE INFORMATION AND NOTES:

AS BUILT
A/B DENOTES "AS BUILT" DIMENSIONS

REGISTERED PROFESSIONAL ENGINEER 6219 OREGON JULY 12, 1988 JAMES R. HARRIS
EXPIRES JUNE 30th, 2007

DESIGN	TCM
DRAFTED	TCM
CHECKED	JRH
DATE	6/07/06

D.R. HORTON
c/o J.T. SMITH COMPANIES
4388 SW MACADAM AVE., SUITE 102
PORTLAND, OR 97239

HARRIS–McMONAGLE ASSOCIATES, INC.
ENGINEERS – SURVEYORS
12555 S.W. HALL BLVD.
TIGARD, OR 97223-6287
PHONE: (503) 639-3453

PARKER CREST
4300 PARKER ROAD
STRIPING PLAN

SCALE 1"=40'
DWG. NAME 7A.STRIPING
SHEET 7a OF 25

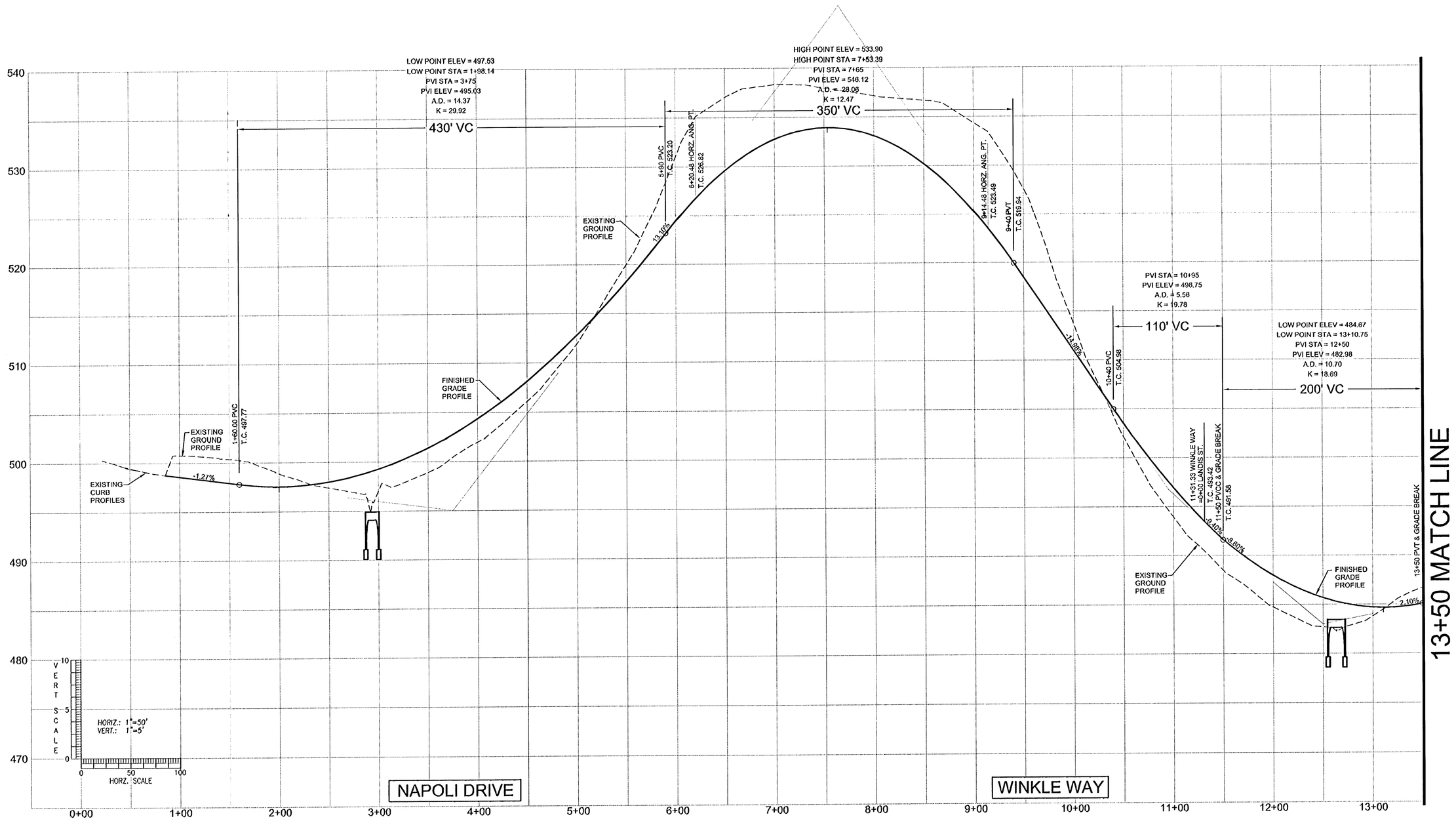

REV.	DESCRIPTION	SUB.	APPR.	DATE
3	AS BUILT	WNH	JOH	5/08/07
2	REVISED CULVERT A ELEVEATION AND STREET PROFILE	TCM	JRH	1/29/07
1	REVISED STATIONING PER NEW BOUNDARY	TCM	JRH	9/01/06

REFER TO TRACING FOR LATEST REVISION

REFERENCE INFORMATION AND NOTES:

AS BUILT
A/B DENOTES "AS BUILT" DIMENSIONS

REGISTERED PROFESSIONAL ENGINEER 6219 OREGON JULY 12, 1988 JAMES R. HARRIS
EXPIRES JUNE 30th, 2007

DESIGN	TCM
DRAFTED	TCM
CHECKED	JRH
DATE	6/07/06

D.R. HORTON
c/o J.T. SMITH COMPANIES
4388 SW MACADAM AVE., SUITE 102
PORTLAND, OR 97239

HARRIS–McMONAGLE ASSOCIATES, INC.
ENGINEERS - SURVEYORS
12555 S.W. HALL BLVD.
TIGARD, OR 97223-6287
PHONE: (503) 639-3453

PARKER CREST
4300 PARKER ROAD
STREET PROFILE
NAPOLI DRIVE AND WINKLE WAY
0+00 TO 13+50

SCALE 1"=40'
DWG. NAME 7.STR-P
SHEET 8 OF 25

13+50 MATCH LINE

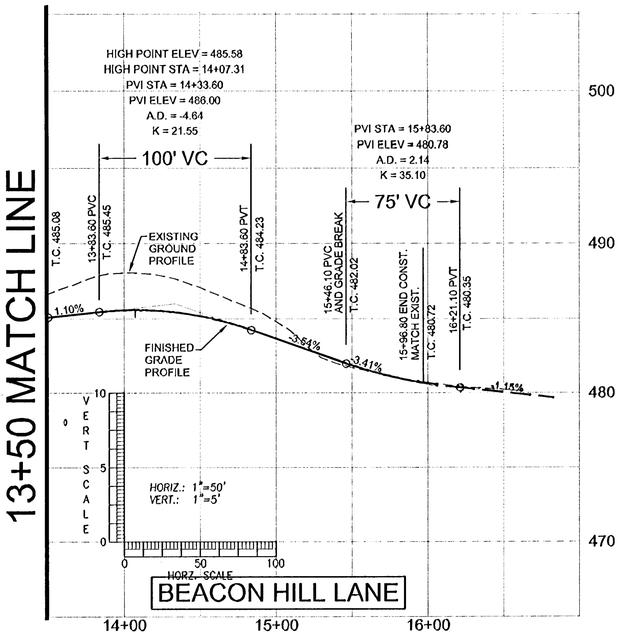

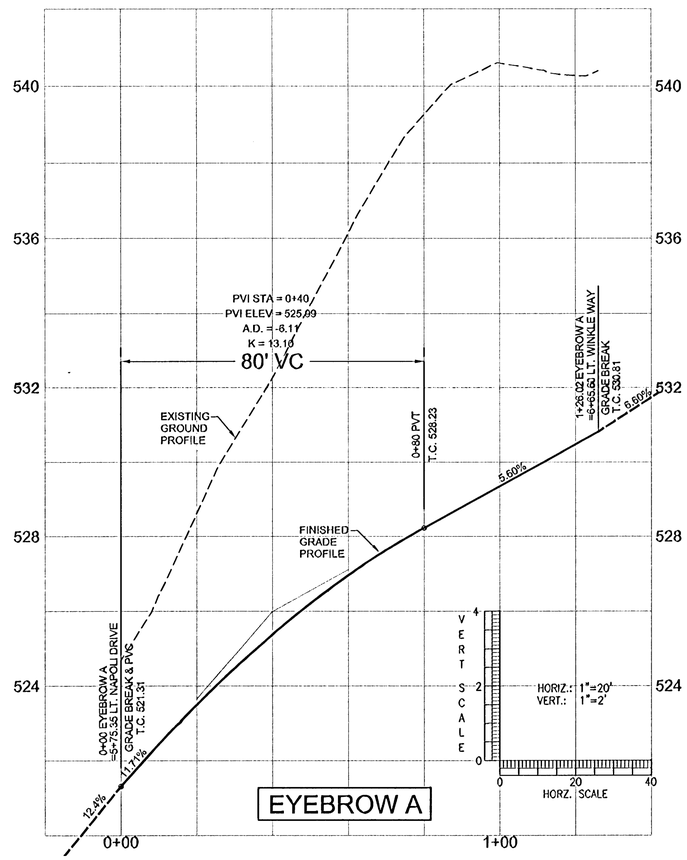

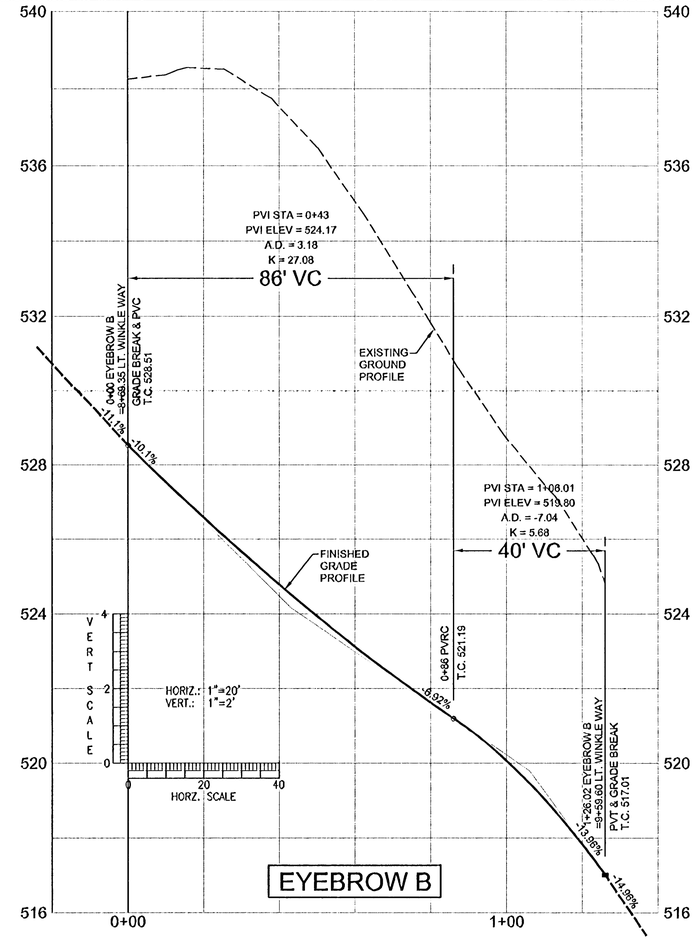

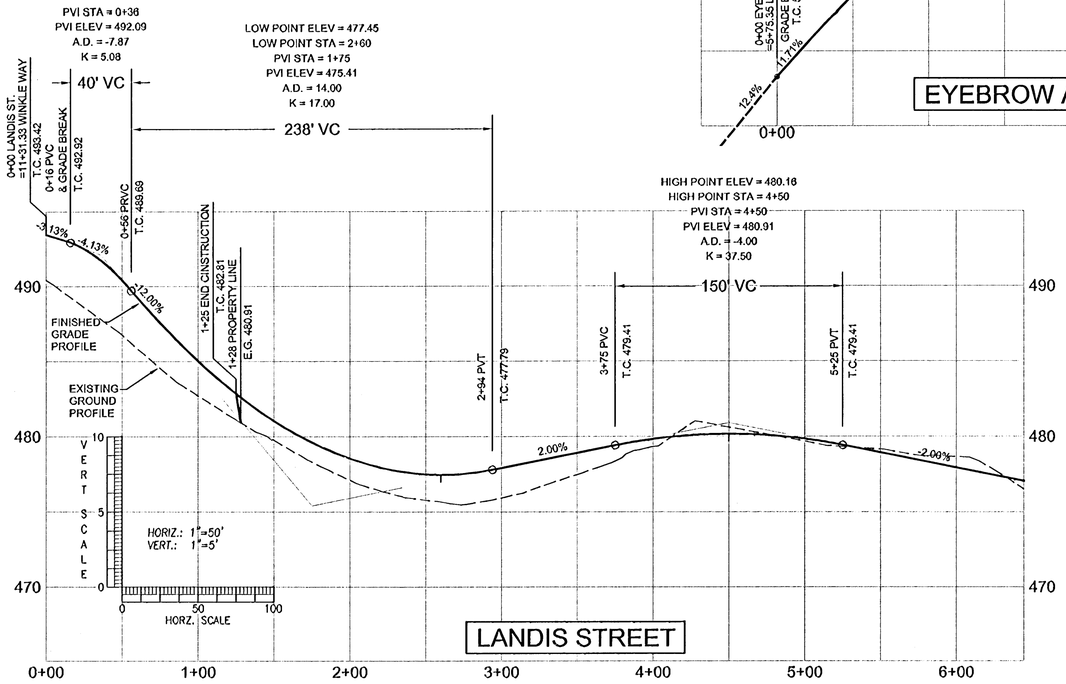

REV.	DESCRIPTION	SUB.	APPR.	DATE
3	AS BUILT	WNH	JOH	5/08/07
2	REVISED STREET PROFILES DUE TO REVISED CULVERT ELEVATIONS	TCM	JRH	1/29/07
1	REVISED STATIONING PER NEW BOUNDARY	TCM	JRH	9/01/06

REFER TO TRACING FOR LATEST REVISION

REFERENCE INFORMATION AND NOTES:

AS BUILT
A/B DENOTES "AS BUILT" DIMENSIONS

REGISTERED PROFESSIONAL ENGINEER 6219 OREGON JULY 12, 1988 JAMES R. HARRIS
EXPIRES JUNE 30th, 2007

DESIGN	TCM
DRAFTED	TCM
CHECKED	JRH
DATE	6/07/06

D.R. HORTON
c/o J.T. SMITH COMPANIES
4386 SW MACADAM AVE., SUITE 102
PORTLAND, OR 97239

HARRIS–McMONAGLE ASSOCIATES, INC.
ENGINEERS – SURVEYORS
12555 S.W. HALL BLVD.
TIGARD, OR 97223–8287
PHONE: (503) 639–3453

PARKER CREST
4300 PARKER ROAD
STREET PROFILE
WINKLE WAY AND BEACON HILL LANE
13+50 TO 17+00, LANDIS STREET, EYEBROWS

SCALE 1"=40'
DWG. NAME 8.STR-P
SHEET 9 OF 25

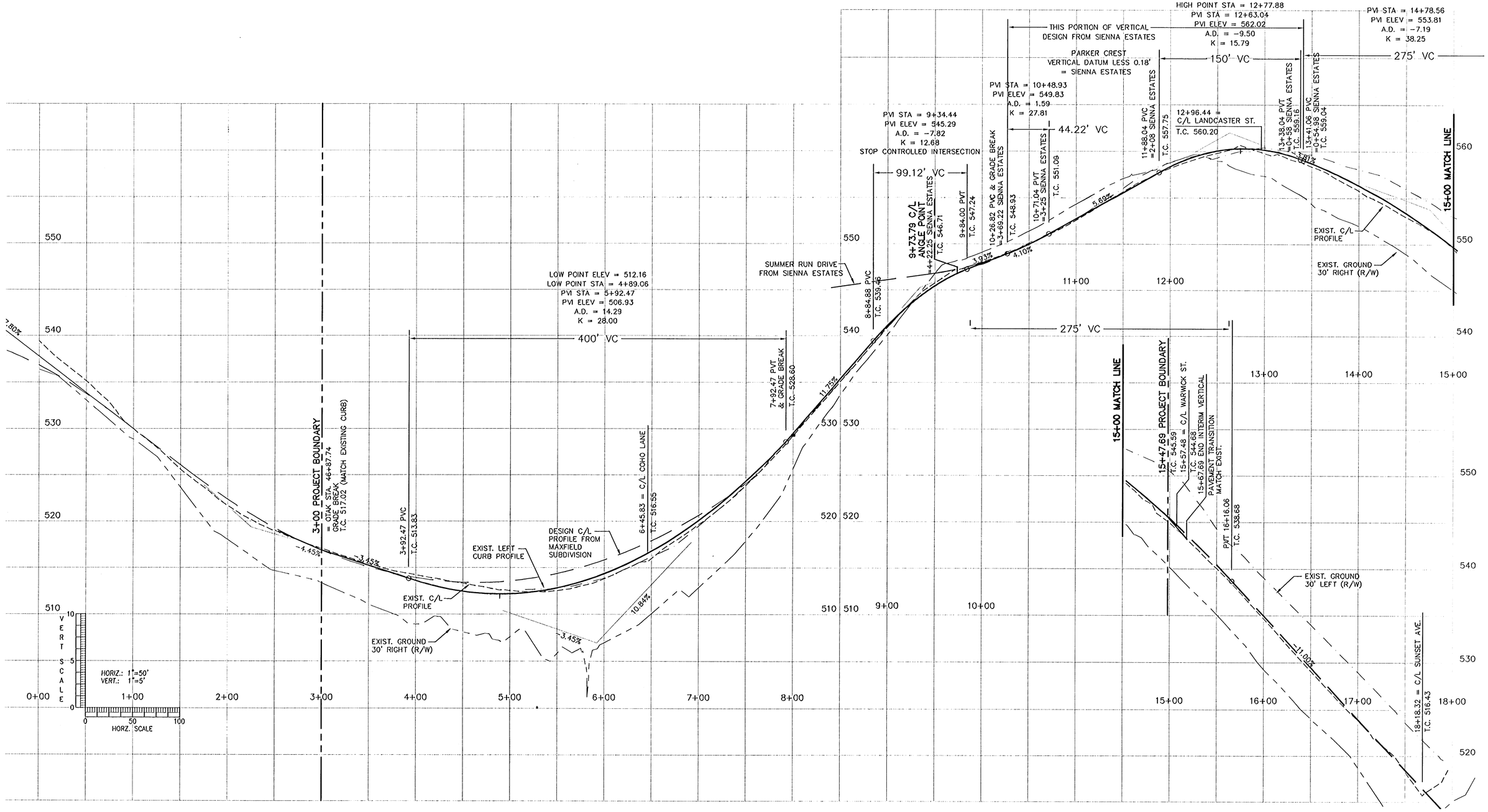

REV.	DESCRIPTION	SUB.	APPR.	DATE
4	AS-BUILT	TCM	JRH	5/08/07
3	REVISED STATIONING PER NEW BOUNDARY	TCM	JRH	9/01/06
2	ADDED TRANSITION NOTES TO PROFILE	TCM	JRH	8/02/06
1	REVISED PER CITY REDLINES	TCM	JRH	7/31/06

REFER TO TRACING FOR LATEST REVISION

REFERENCE INFORMATION AND NOTES:

AS BUILT
A/B DENOTES "AS BUILT" DIMENSIONS

REGISTERED PROFESSIONAL ENGINEER 6219 OREGON JULY 13, 1988 JAMES R. HARRIS
EXPIRES JUNE 30th, 2007

DESIGN: TCM
DRAFTED: TCM
CHECKED: JRH
DATE: 6/07/06

D.R. HORTON
c/o J.T. SMITH COMPANIES
4386 SW MACADAM AVE., SUITE 102
PORTLAND, OR 97239

HARRIS-McMONAGLE ASSOCIATES, INC.
ENGINEERS - SURVEYORS
12555 S.W. HALL BLVD.
TIGARD, OR 97223-6287
PHONE: (503) 639-3453

PARKER CREST
4300 PARKER ROAD
STREET PROFILE
PARKER ROAD

SCALE: AS SHOWN
DWG. NAME: 9.PARKER
SHEET 10 OF 25

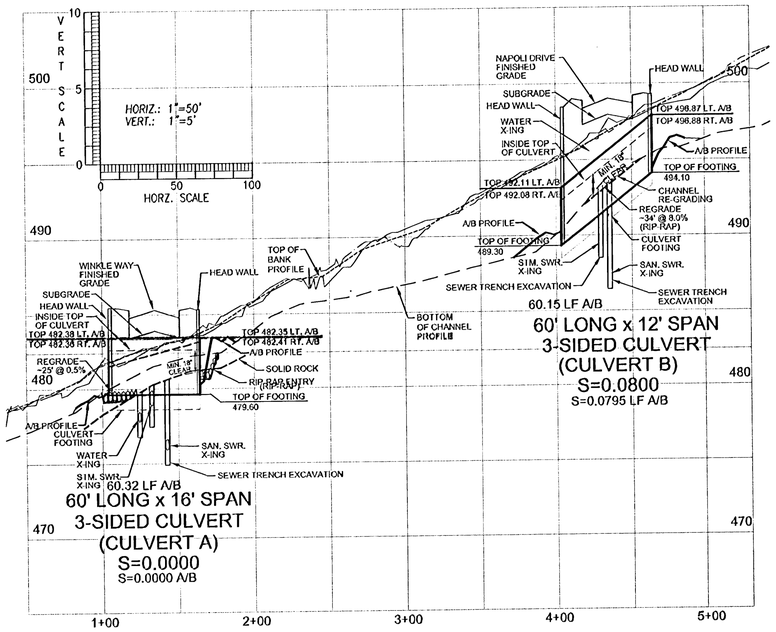

3-SIDED CULVERT INSTALLATION NOTES:

1. CONTRACTOR SHALL COORDINATE WITH UTILITY VAULT CO. IN THE PREPARATION AND SUBMITTAL OF THE STRUCTURAL CALCULATIONS AND DETAILS TO THE CITY OF WEST LINN ENGINEERING DEPARTMENT PRIOR TO THE COMMENCEMENT OF WORK ON THE 3-SIDED CULVERT.
2. UTILITY VAULT CO. WILL NEED AT LEAST 3 WEEKS LEAD TIME TO PREPARE THE 3-SIDED CULVERT AND FOOTING PRECAST SECTIONS.
3. GEOTECHNICAL ENGINEER MUST WITNESS AND EVALUATE SUBGRADE AFTER EXCAVATION AND BEFORE INSTALLATION OF CULVERT FOOTINGS.
4. THE UTILITY CONDUITS MAY NEED TO BE INSTALLED DURING THE RETAINING WALL CONSTRUCTION, BETWEEN GEO-GRIDS, AS NEEDED.
5. THE STREAM AREA SHALL NOT BE DISTURBED. CONSTRUCTION TO OCCUR ONLY DURING LOW FLOW PERIODS. THE CONTRACTOR WILL NEED TO WORK BOTH SIDES OF THE STREAM AREA TO INSTALL THE 3-SIDED CULVERT.
6. ESC MEASURES MUST BE MAINTAINED DAILY. DO NOT ALLOW SEDIMENT-LADEN WATER TO LEAVE THE WORK AREA!!!
7. ALL DISTURBED AREAS SHALL BE HYDRO-SEEDED.
8. ALL INVASIVE SPECIES (BLACKBERRIES) SHALL BE REMOVED FROM THE CREEK AREA.

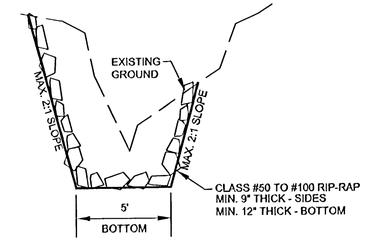

TYPICAL RE-GRADED CHANNEL

NO SCALE

NOTES:

1. CONTRACTOR SHALL NOT CAUSE ANY DISTURBANCE OUTSIDE THE AREAS SHOWN ON THIS PLANSET.
2. ALL CHANNEL RE-GRADING SHALL BE DONE IN A MANNER THAT LIMITS THE DISTURBANCE TO THE EXISTING CHANNEL.
3. ADEQUATE ESC MEASURES SHALL BE IN PLACE PRIOR TO BEGINNING ANY CONSTRUCTION WORK WITHIN THE CHANNEL. IF IT BECOMES APPARENT THAT WATER BORNE SEDIMENT IS LEAVING THE SITE, THE DISTURBANCE CAUSING THE SEDIMENT SHALL CEASE, AND THE ESC MEASURES WILL BE UPGRADED UNTIL THE ESC IS FUNCTIONING ADEQUATELY.
4. ANY FILL NEEDING TO BE PLACED ADJACENT TO THE CHANNEL SHALL BE CLEAN NATIVE MATERIAL (EXCLUDING ROCK BACKFILL AREAS). FILL SHALL BE COMPACTED, AND RIP-RAP LINED TO PROTECT PERMANENTLY AGAINST EROSION. THE RE-GRADED CHANNELS SHALL BE LINED WITH RIP-RAP AS SHOWN ABOVE.

3 SIDED CULVERT

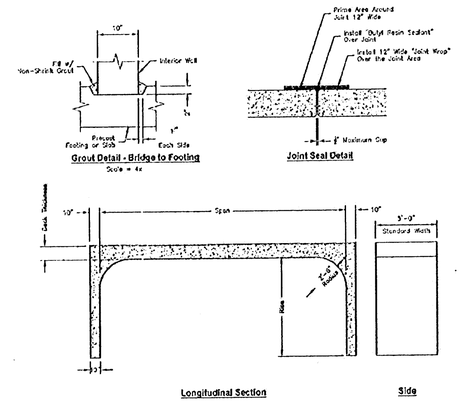

Sizing And Weights (KIPs) For 3'-0" Standard Width Product

SPAN	8'	8'	10'	11'	12'	12'	13'	13'	14'	14'	15'	15'	16'	16'	17'	17'	18'	18'	19'	19'	20'	20'	21'	21'	22'	22'	23'	23'	24'	24'
RISE	18"	22"	18"	18"	18"	22"	18"	22"	18"	22"	18"	22"	18"	22"	18"	22"	18"	22"	18"	22"	18"	22"	18"	22"	18"	22"	18"	22"	18"	22"
RISE = 3'	11.7	12.3	12.8	13.5	14.9	14.9	15.4	16.0	15.7	17.2	17.3	17.9	18.5	19.1	19.5	20.4	20.7	21.8	22.1	23.0	23.8	24.4	25.5	26.1	26.8	27.4	28.2	28.8	29.5	30.1
RISE = 4'	13.8	13.5	14.8	14.9	15.4	16.4	16.7	17.3	17.8	18.5	19.3	19.9	20.4	20.7	21.8	22.5	23.1	23.8	24.4	25.1	26.0	26.6	27.3	28.0	28.7	29.3	30.2	30.8	31.5	32.1
RISE = 5'	15.2	15.6	15.4	16.0	16.7	17.3	17.9	18.5	19.1	19.8	20.4	21.0	21.7	22.0	23.1	23.8	24.4	25.1	25.7	26.4	27.3	27.9	28.6	29.3	30.0	30.6	31.5	32.1	32.8	33.4
RISE = 6'	16.5	16.9	16.7	17.3	17.9	18.5	19.1	19.8	20.4	21.0	21.7	22.3	22.9	23.5	24.4	25.1	25.7	26.4	27.0	27.7	28.6	29.2	29.9	30.6	31.2	31.9	32.8	33.4	34.1	34.7
RISE = 7'	17.7	17.3	17.8	18.4	18.9	19.5	20.1	20.7	21.3	21.9	22.6	23.2	23.8	24.4	25.1	25.7	26.4	27.0	27.6	28.3	29.2	29.8	30.5	31.2	31.8	32.5	33.4	34.0	34.7	35.3
RISE = 8'	18.9	20.5	19.2	19.8	20.4	21.0	21.6	22.2	22.8	23.4	24.0	24.6	25.2	25.8	26.4	27.2	27.8	28.4	29.0	29.6	30.5	31.1	31.8	32.4	33.1	33.7	34.6	35.2	35.9	36.5
RISE = 9'	19.9	21.8	20.4	21.0	21.7	22.3	22.9	23.5	24.1	24.8	25.4	26.0	26.6	27.2	27.8	28.4	29.0	29.6	30.2	30.9	31.7	32.3	33.0	33.6	34.3	34.9	35.8	36.4	37.1	37.7
RISE = 10'	20.9	23.0	21.0	21.7	22.3	22.9	23.5	24.2	24.8	25.4	26.0	26.6	27.2	27.8	28.4	29.0	29.6	30.2	30.8	31.5	32.3	32.9	33.6	34.2	34.9	35.5	36.4	37.0	37.7	38.3

Scale: 3/16" = 1'-0"

UTILITY VAULT™ a division of Oldcastle PrecastInc. PO Box 323, Wilsonville, Oregon 97070-0323 Tel: (503) 682-2544 Fax: (503) 682-2657	3 SIDED CULVERT		3 SIDED CULVERT
	File Name: C20TB13-SIDE2		
	Issue Date: 2005		
	www.uvwilsonville.com		

148.1

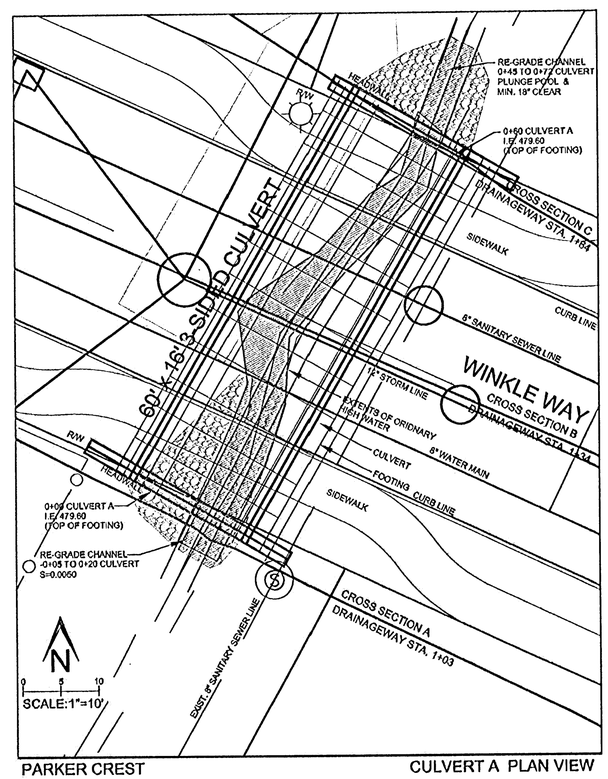

PARKER CREST — CULVERT A PLAN VIEW

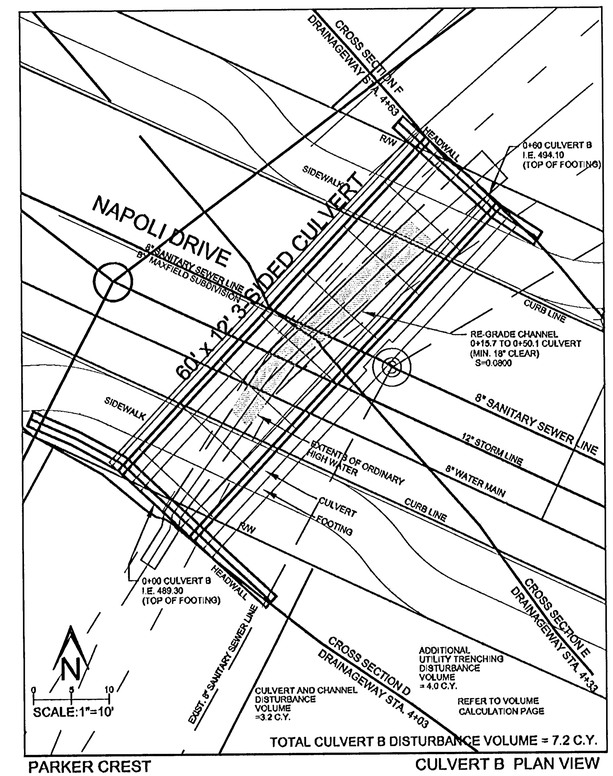

PARKER CREST — CULVERT B PLAN VIEW

REV.	DESCRIPTION	SUB.	APPR.	DATE
6	AS-BUILT	TCM	JRH	5/08/07
5	REVISED CULVERT A ELEVATIONS TO MATCH CORPS OF ENG. PLAN	TCM	JRH	1/30/07
4	REVISED PER CITY COMMENTS	TCM	JRH	9/20/06
3	ADJUSTED CULVERT INVERTS & REVISED PER CITY COMMENTS	TCM	JRH	9/01/06
2	ADDED CHANNEL DETAIL AND NOTES PER CITY REDLINES	TCM	JRH	8/02/06
1	REVISED CULVERT SIZE AND LOCATION	TCM	JRH	7/31/06

REFER TO TRACING FOR LATEST REVISION

REFERENCE INFORMATION AND NOTES:

AS BUILT
A/B DENOTES "AS BUILT" DIMENSIONS

REGISTERED PROFESSIONAL ENGINEER 6219 OREGON JULY 12, 1988 JAMES R. HARRIS
EXPIRES JUNE 30th, 2007

DESIGN	TCM
DRAFTED	TCM
CHECKED	JRH
DATE	6/07/06

D.R. HORTON
c/o J.T. SMITH COMPANIES
4388 SW MACADAM AVE., SUITE 102
PORTLAND, OR 97239

HARRIS-McMONAGLE ASSOCIATES, INC.
ENGINEERS - SURVEYORS
12555 S.W. HALL BLVD.
TIGARD, OR 97223-6287
PHONE: (503) 639-3453

PARKER CREST
4300 PARKER ROAD

3-SIDED CULVERT
DETAILS AND NOTES

SCALE: AS SHOWN
DWG. NAME: 10.3-SIDE
SHEET 11 OF 25

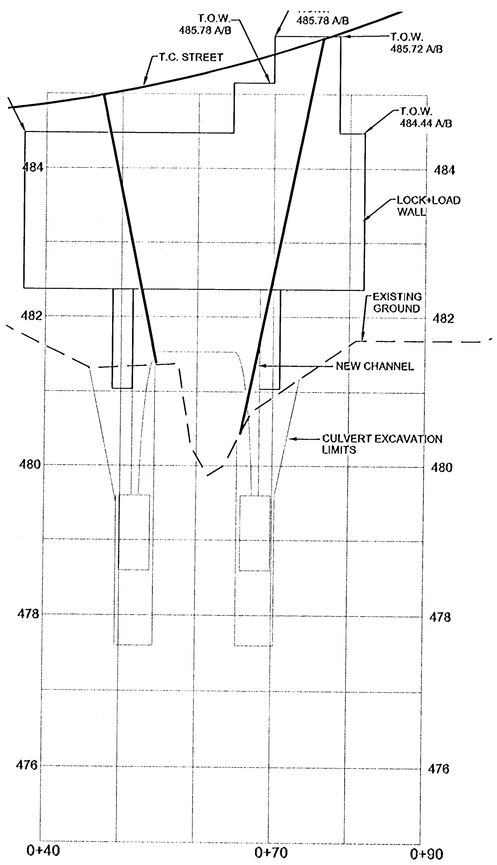

CROSS SECTION A
0+00 CULVERT A

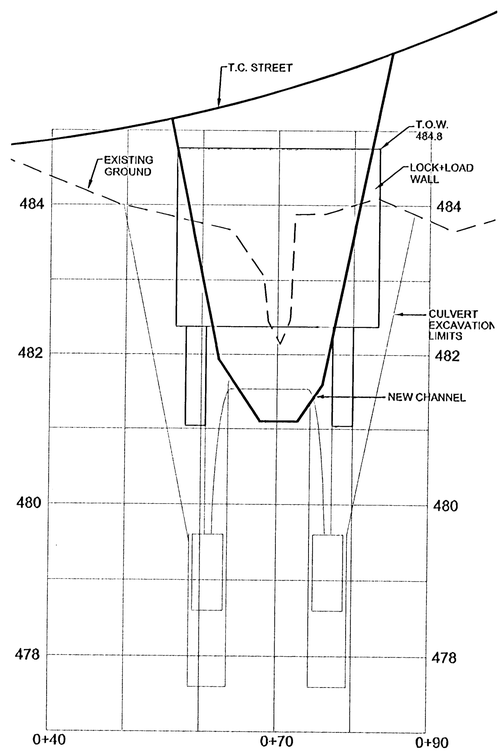

CROSS SECTION C
0+60 CULVERT A

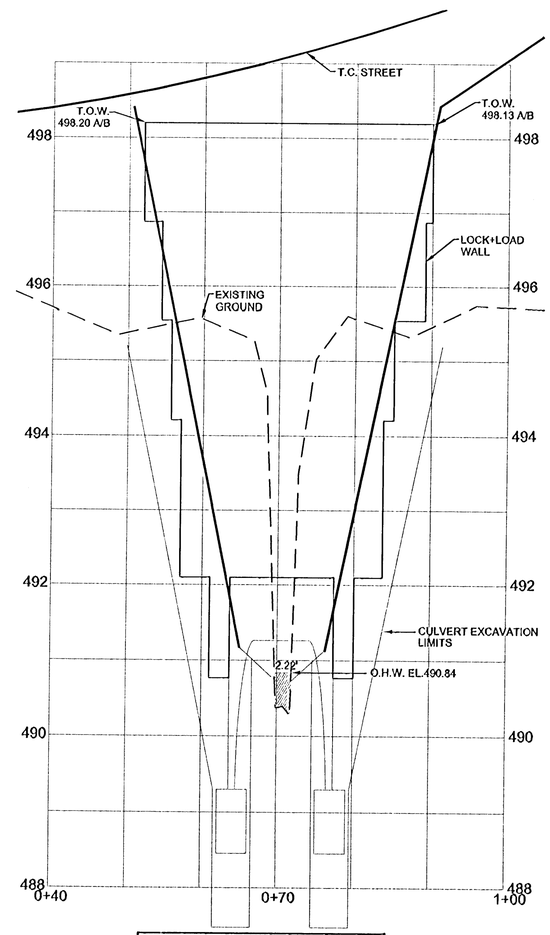

CROSS SECTION D
0+00 CULVERT B

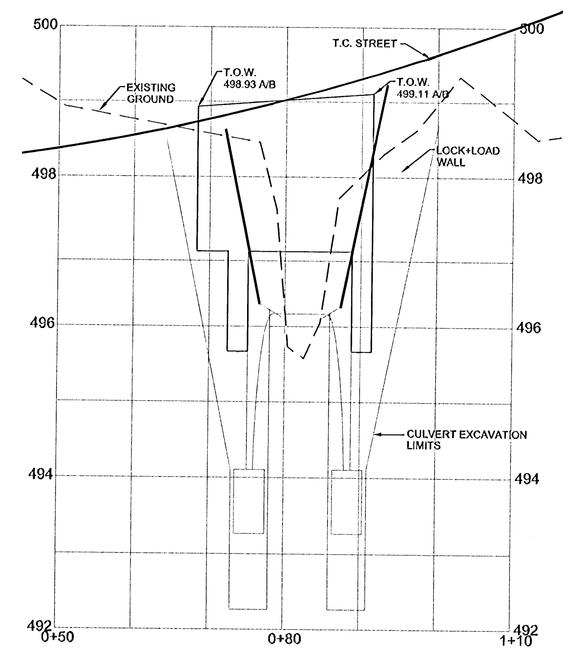

CROSS SECTION F
0+60 CULVERT B

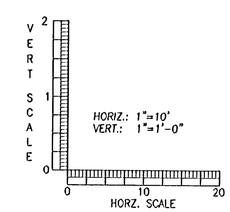

REV.	DESCRIPTION	SUB.	APPR.	DATE
2	AS-BUILT	TCM	JRH	5/08/07
1	REVISED CULVERT A CROSS SECTIONS PER CORPS	TCM	JRH	1/29/07

REFER TO TRACING FOR LATEST REVISION

REFERENCE INFORMATION AND NOTES:

AS BUILT
A/B DENOTES "AS BUILT" DIMENSIONS

REGISTERED PROFESSIONAL ENGINEER 6219 OREGON JULY 12, 1988 JAMES R. HARRIS
EXPIRES JUNE 30th, 2007

DESIGN	TCM
DRAFTED	TCM
CHECKED	JRH
DATE	7/31/06

D.R. HORTON
c/o J.T. SMITH COMPANIES
4388 SW MACADAM AVE., SUITE 102
PORTLAND, OR 97239

HARRIS-McMONAGLE ASSOCIATES, INC.
ENGINEERS - SURVEYORS
12555 S.W. HALL BLVD.
TIGARD, OR 97223-8287
PHONE: (503) 639-3453

PARKER CREST
4300 PARKER ROAD
3-SIDED CULVERT
HEADWALL CROSS SECTIONS

SCALE: AS SHOWN
DWG. NAME: 10.3-SIDE
SHEET 12 OF 25

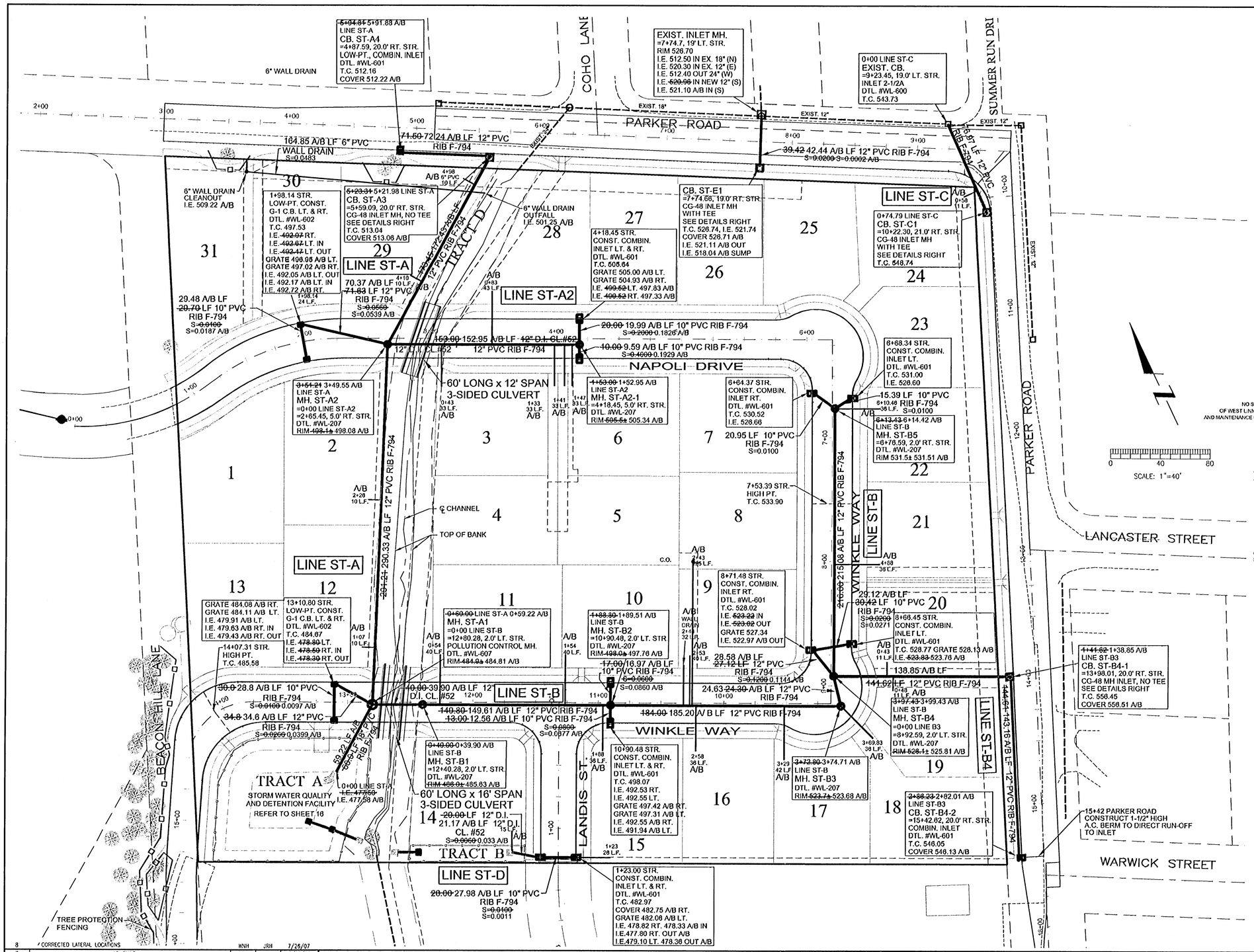

STORM DRAIN NOTES:

1. ALL WORK IN THE PUBLIC RIGHT-OF-WAY AND CITY UTILITY EASEMENTS SHALL CONFORM TO THE CURRENT CITY OF WEST LINN STANDARD DRAWINGS AND STANDARD CONSTRUCTION SPECIFICATIONS
2. CONTRACTOR SHALL VERIFY INVERTS OF EXISTING STRUCTURES PRIOR TO CONSTRUCTION ACTIVITIES. CONTACT THE ENGINEER IF ANY DISCREPANCIES ARE FOUND BETWEEN EXISTING STRUCTURES AND DATA SHOWN IN THE PLANS.
3. STORM SEWER SHALL BE CONSTRUCTED WITH PVC NON-PRESSURE RIBBED SOLID WALL PIPE, EXCEPT WHERE SHOWN ON THE PLANS. SIZES OF THE STORM SEWER PIPE ARE PROVIDED IN THE CONSTRUCTION NOTES, THIS SHEET, AND ON THE PROFILE SHEET. USE CLASS B BACKFILL, OR AS DESIGNATED ON THE RELEVANT PROFILE SHEET.
4. SERVICE LATERALS SHALL BE 4-INCH PVC NON-PRESSURE PIPE, CLASS B BACKFILL, WITH MINIMUM SLOPE OF 2.00 WHERE SHOWN ON THE PLANS. LATERALS SHALL BE PLACED AT 90° TO THE SEWER MAIN LINE WHENEVER POSSIBLE.
5. MANHOLE RIM ELEVATIONS SHOWN IN THE PLANS ARE APPROXIMATE AND FOR REFERENCE ONLY. FINAL MANHOLE RIM ELEVATIONS SHALL BE SET TO MATCH THE CONSTRUCTED FINISHED GRADE, EXCEPT
6. ONCE AN INLET OR CATCH BASIN IS INSTALLED, INSTALL INLET PROTECTION IMMEDIATELY.
7. LOTS 1, 7, 13, 23, 24, 25, 26, 27, 30 & 31 SHALL BE SERVED BY WEEP HOLES THROUGH THE CURB.
8. ALL INLETS LOCATED ON STREET GRADES EXCEEDING 5% SHALL BE COMBINATION INLETS PER DETAIL #WL-601, OR A CG-48 INLET MH. PER THE DETAILS BELOW.

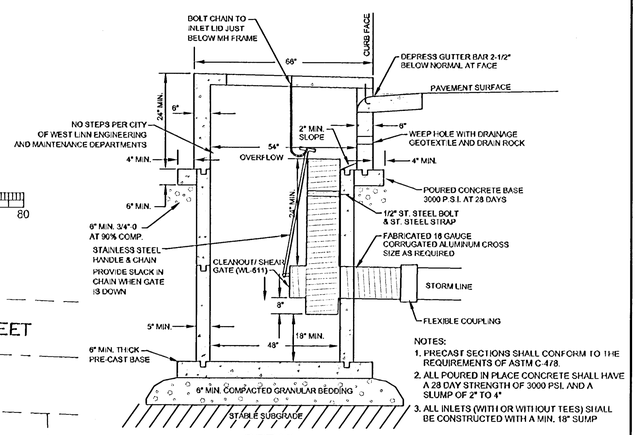

NOTES:
1. PRECAST SECTIONS SHALL CONFORM TO THE REQUIREMENTS OF ASTM C-478.
2. ALL POURED IN PLACE CONCRETE SHALL HAVE A 28 DAY STRENGTH OF 3000 PSI, AND A SLUMP OF 2" TO 4"
3. ALL INLETS (WITH OR WITHOUT TEES) SHALL BE CONSTRUCTED WITH A MIN. 18" SUMP

DETAIL
CG-48 INLET MH WITH POLLUTION CONTROL TEE
NO SCALE

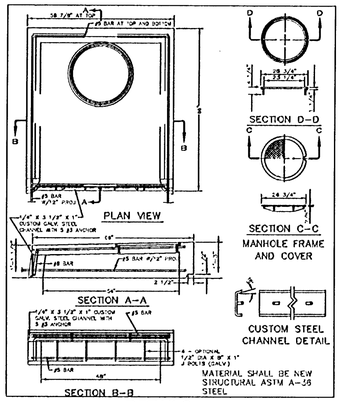

DETAILS
CG-48 INLET MH. TOP

REV.	DESCRIPTION	SUB.	APPR.	DATE
8	CORRECTED LATERAL LOCATIONS	WNH	JRH	7/26/07
7	AS-BUILT	TCM	JRH	5/08/07
6	REVISED WINKLE WAY GRADES DUE TO REVISED PROFILE OVER CULVERT	TCM	JRH	1/30/07
5	ADDED WALL DRAIN LATERALS	TCM	JRH	12/01/06
4	REVISED INLET TYPES, ADDED/REVISED INLET MH DETAILS PER CITY	TCM	JRH	10/19/06
3	REVISED PER NEW BOUNDARY AND CITY COMMENTS	TCM	JRH	9/01/06
2	ADDED TREE PROTECTION FENCING	TCM	JRH	8/02/06
1	REVISED PER CITY REDLINES	TCM	JRH	7/31/06

REFER TO TRACING FOR LATEST REVISION

REFERENCE INFORMATION AND NOTES:

AS BUILT
A/B DENOTES "AS BUILT" DIMENSIONS

REGISTERED PROFESSIONAL ENGINEER 6219 OREGON JULY 12, 1988 JAMES R. HARRIS
EXPIRES JUNE 30th, 2007

DESIGN: TCM
DRAFTED: TCM
CHECKED: JRH
DATE: 6/07/06

D.R. HORTON
c/o J.T. SMITH COMPANIES
4386 SW MACADAM AVE., SUITE 102
PORTLAND, OR 97239

HARRIS-McMONAGLE ASSOCIATES, INC.
ENGINEERS - SURVEYORS
12555 S.W. HALL BLVD.
TIGARD, OR 97223-6287
PHONE: (503) 639-3453

PARKER CREST
4300 PARKER ROAD
STORM SEWER PLAN

SCALE: 1"=40'
DWG. NAME: 11.STM
SHEET 13 OF 25

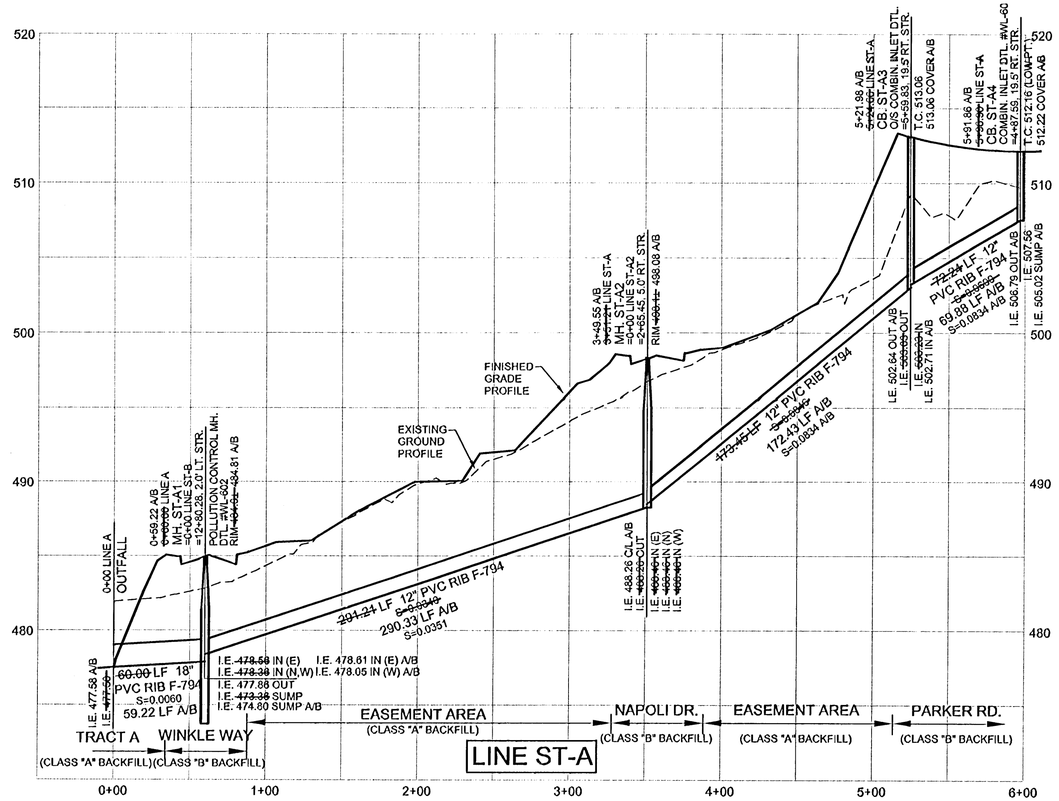

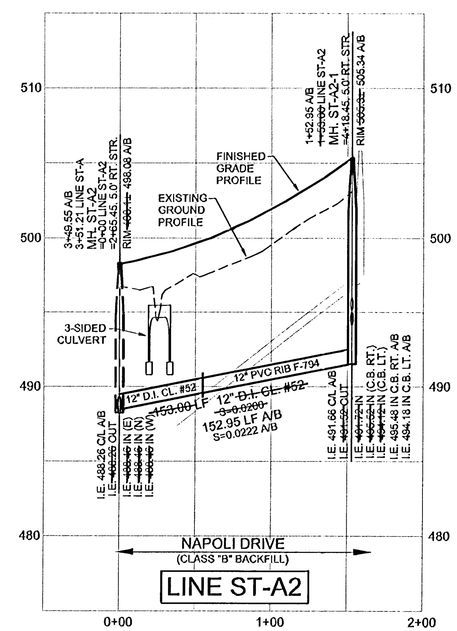

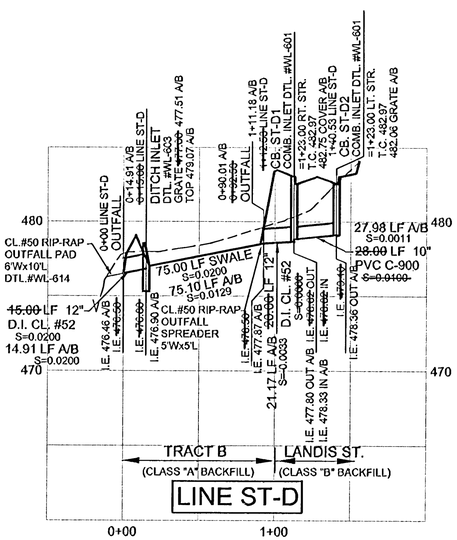

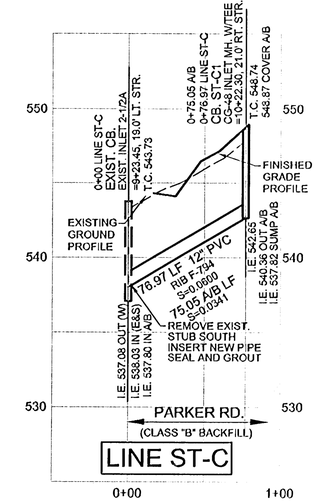

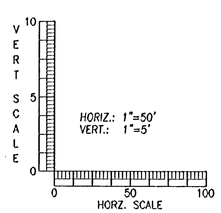

REV.	DESCRIPTION	SUB.	APPR.	DATE
4	AS-BUILT	TCM	JRH	5/08/07
3	REVISED LINE ST-D STREET GRADES, MH ST-A1 RIM	TCM	JRH	1/30/07
2	REVISED PER NEW BOUNDARY AND CITY COMMENTS	TCM	JRH	3/01/06
1	REVISED PER CITY REDLINES	TCM	JRH	7/31/06

REFER TO TRACING FOR LATEST REVISION

REFERENCE INFORMATION AND NOTES:

AS BUILT
A/B DENOTES "AS BUILT" DIMENSIONS

REGISTERED PROFESSIONAL ENGINEER 6219 OREGON JULY 12, 1968 JAMES B. HARRIS
EXPIRES JUNE 30th, 2007

DESIGN	TCM
DRAFTED	TCM
CHECKED	JRH
DATE	6/07/06

D.R. HORTON
c/o J.T. SMITH COMPANIES
4388 SW MACADAM AVE., SUITE 102
PORTLAND, OR 97239

HARRIS–McMONAGLE ASSOCIATES, INC.
ENGINEERS – SURVEYORS
12555 S.W. HALL BLVD.
TIGARD, OR 97223-6287
PHONE: (503) 639-3453

PARKER CREST
4300 PARKER ROAD

STORM SEWER PROFILE
LINES ST-A, ST-A2, ST-C & ST-D

SCALE: AS SHOWN
DWG. NAME: 15.SAN-P
SHEET 14 OF 25

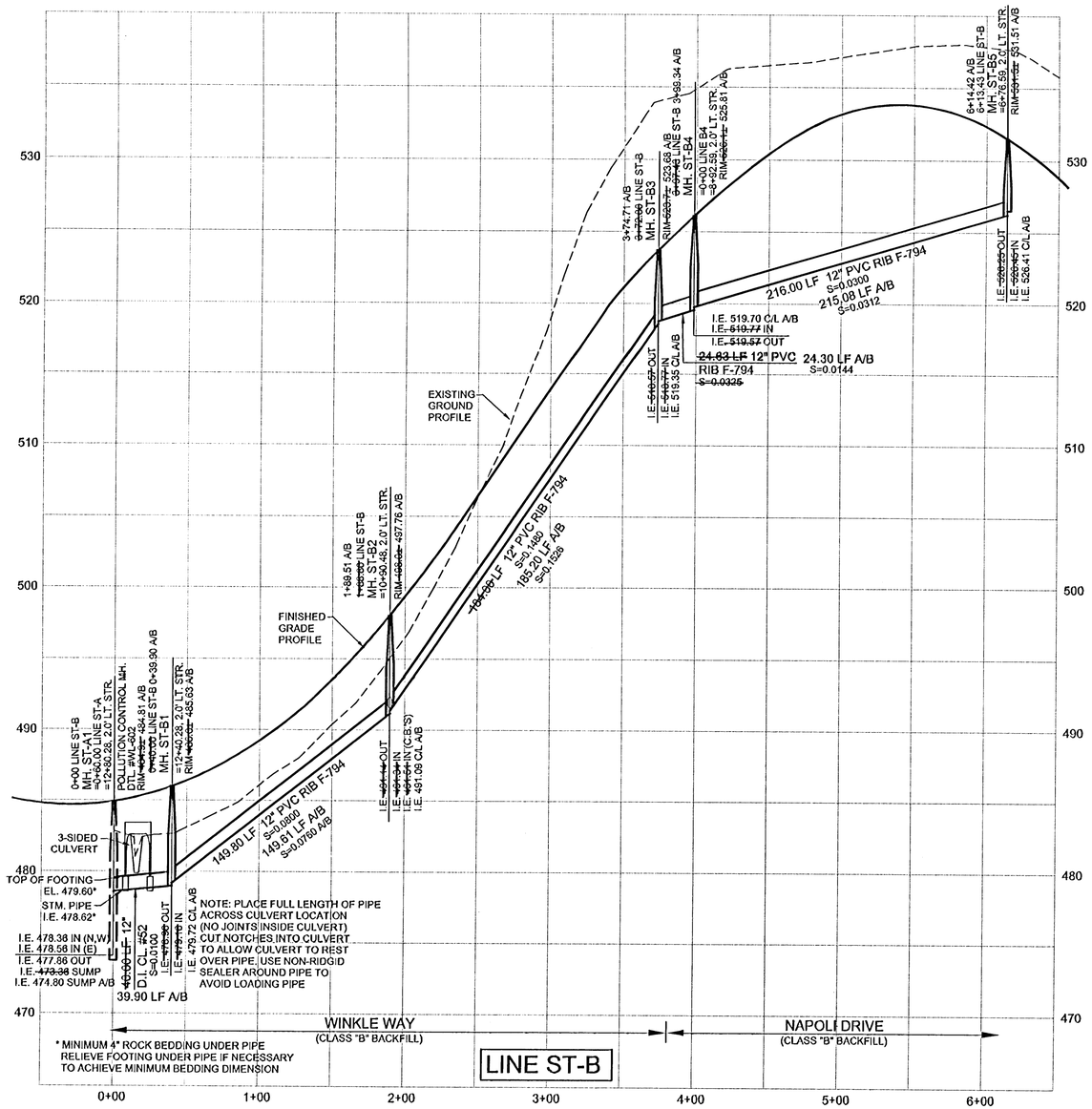

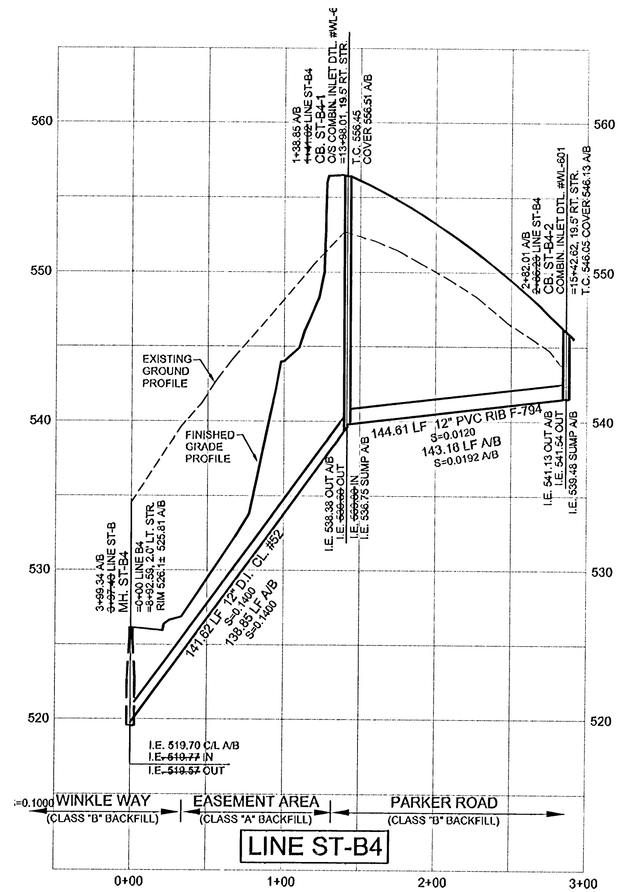

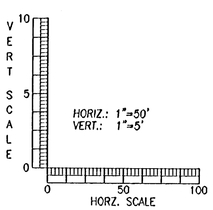

REV.	DESCRIPTION	SUB.	APPR.	DATE
4	REVISED LINE ST-B RIMS AND STREET GRADES DUE TO CULVERT CHANGES	TCM	JRH	1/30/07
3	REVISED PER NEW BOUNDARY AND CITY COMMENTS	TCM	JRH	9/01/06
2	CORRECTED MH ST-A1 I.E. IN	TCM	JRH	8/02/06
1	REVISED PER CITY REDLINES	TCM	JRH	7/31/06

REFER TO TRACING FOR LATEST REVISION

REFERENCE INFORMATION AND NOTES:

REGISTERED PROFESSIONAL ENGINEER 6219 OREGON JULY 12, 1966 JAMES R. HARRIS
EXPIRES JUNE 30th, 2007

DESIGN: TCM
DRAFTED: TCM
CHECKED: JRH
DATE: 6/07/06

D.R. HORTON
c/o J.T. SMITH COMPANIES
4388 SW MACADAM AVE., SUITE 102
PORTLAND, OR 97239

HARRIS-McMONAGLE ASSOCIATES, INC.
ENGINEERS - SURVEYORS
12555 S.W. HALL BLVD.
TIGARD, OR 97223-6287
PHONE: (503) 639-3453

PARKER CREST
4300 PARKER ROAD
STORM SEWER PROFILE
LINES ST-B & ST-B4

SCALE: AS SHOWN
DWG. NAME: 15.SAN-P
SHEET 15 OF 25

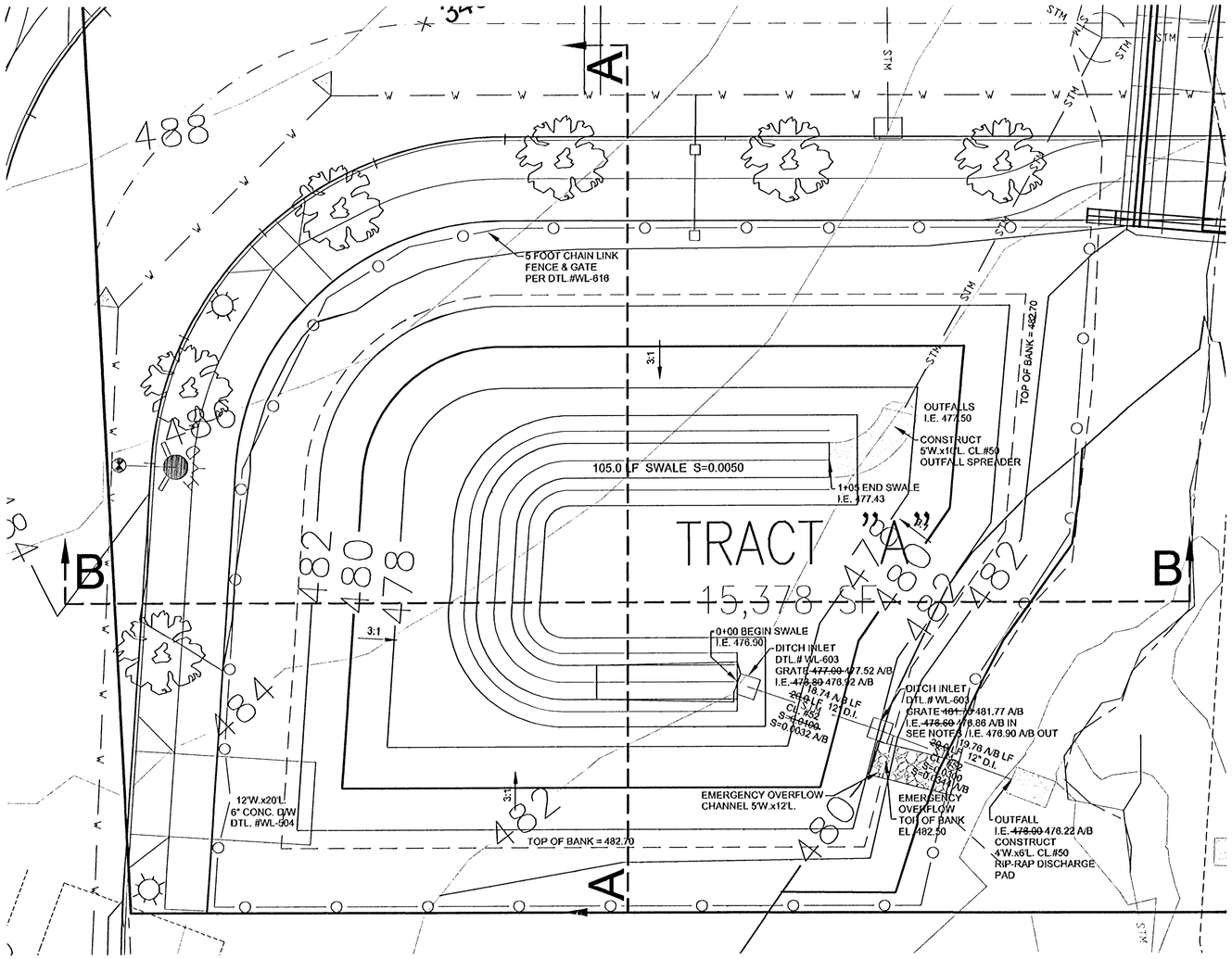

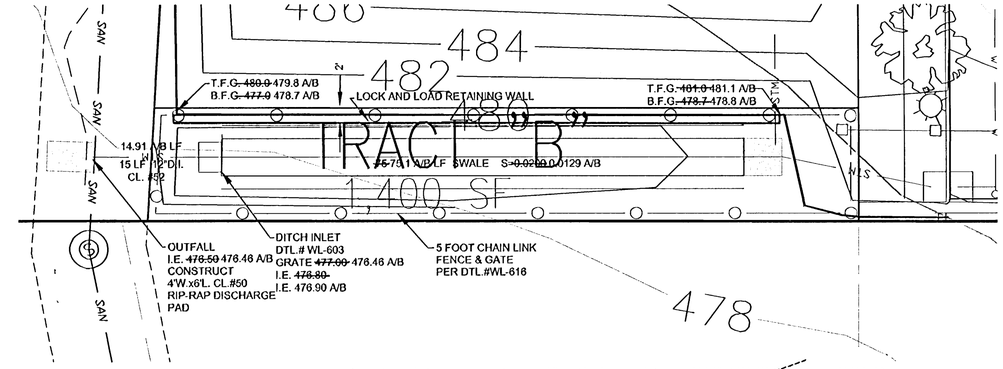

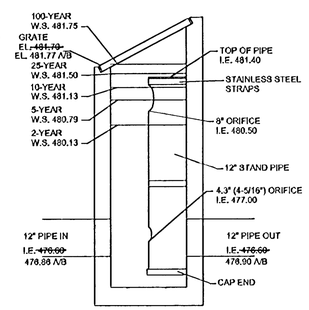

OVERFLOW INLET DETAIL
DITCH INLET – #WL–603
NO SCALE

POND OUTLET CONTROL:
PROVIDE 12" VERTICAL STAND PIPE, SECURE TO OUFALL SIDE OF OVERFLOW INLET WITH STAINLESS STEEL STRAPS. TEE INTO 12" PIPE OUT. PROVIDE FOLLOWING ORIFICES:
4.3" – I.E. 477.00
8.0" – I.E. 480.50
TOP OF PIPE (OPEN) – 481.40

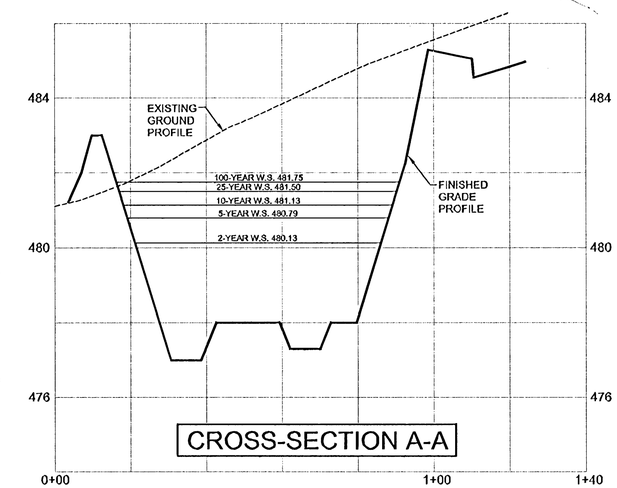

CROSS-SECTION A-A

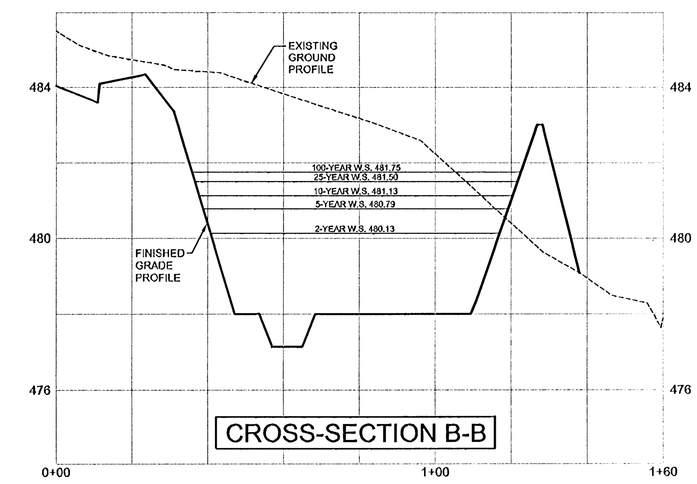

CROSS-SECTION B-B

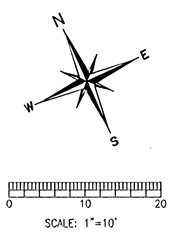

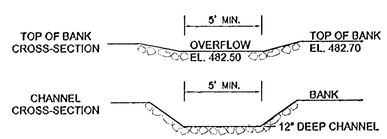

LINE ENTIRE CHANNEL WITH CL.#50 TO #100 RIP-RAP

POND OVERFLOW CHANNEL – TYPICAL SECTIONS
NO SCALE

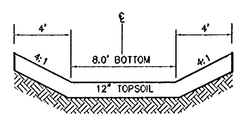

POND SWALE – TYPICAL SECTION
NO SCALE

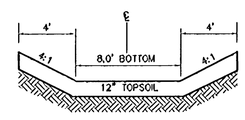

TRACT B SWALE – TYPICAL SECTION
NO SCALE

REFER TO SHEET L1 FOR POND AND SWALE LANDSCAPING PLAN

REV.	DESCRIPTION	SUB.	APPR.	DATE
4	AS-BUILT	TCM	JRH	5/08/07
3	REVISED CROSS SECTIONS A-A & B-B TO MATCH NEW STREET GRADES, AND RELOCATED POND ACCESS D/W DUE TO GRADE CHANGES	TCM	JRH	1/30/07
2	REVISED SWALE WIDTHS PER CITY COMMENTS, ADDED WALL	TCM	JRH	9/20/06
1	REVISED PER NEW BOUNDARY AND CITY COMMENTS	TCM	JRH	9/01/06

REFER TO TRACING FOR LATEST REVISION

REFERENCE INFORMATION AND NOTES:

AS BUILT
A/B DENOTES "AS BUILT" DIMENSIONS

REGISTERED PROFESSIONAL ENGINEER 6219 OREGON JULY 12, 1968 JAMES R. HARRIS
EXPIRES JUNE 30th, 2007

DESIGN	TCM
DRAFTED	TCM
CHECKED	JRH
DATE	6/07/06

D.R. HORTON
c/o J.T. SMITH COMPANIES
4386 SW MACADAM AVE., SUITE 102
PORTLAND, OR 97239

HARRIS–McMONAGLE ASSOCIATES, INC.
ENGINEERS – SURVEYORS
12555 S.W. HALL BLVD.
TIGARD, OR 97223–6287
PHONE: (503) 639–3453

PARKER CREST
4300 PARKER ROAD
WATER QUALITY SWALES AND DETENTION POND PLAN

SCALE 1"=10'
DWG. NAME 14.POND
SHEET 16 OF 25

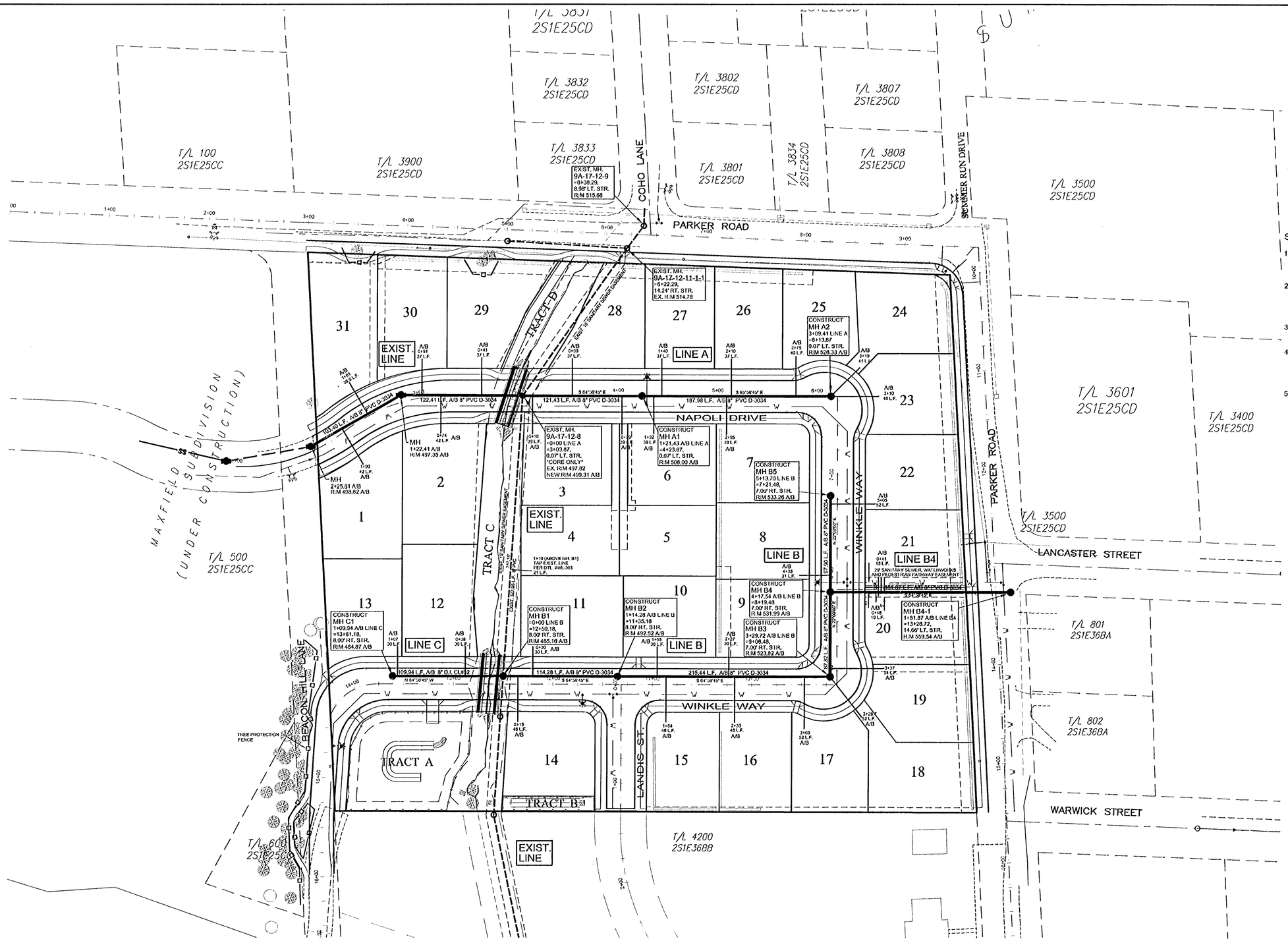

SANITARY SEWER NOTES:

1. ALL WORK IN THE PUBLIC RIGHT-OF-WAY AND CITY UTILITY EASEMENTS SHALL CONFORM TO THE CURRENT CITY OF WEST LINN STANDARD DRAWINGS AND STANDARD CONSTRUCTION SPECIFICATIONS
2. CONTRACTOR SHALL VERIFY INVERTS OF EXISTING STRUCTURES PRIOR TO CONSTRUCTION ACTIVITIES. CONTACT THE ENGINEER IF ANY DISCREPANCIES ARE FOUND BETWEEN EXISTING STRUCTURES AND DATA SHOWN IN THE PLANS.
3. ALL SANITARY SEWER SHALL BE CONSTRUCTED WITH PVC NON-PRESSURE PIPE, EXCEPT WHERE SHOWN ON THE PLANS.
4. SERVICE LATERALS SHALL BE 4-INCH PVC NON-PRESSURE PIPE, CLASS B BACKFILL, WITH MINIMUM SLOPE OF 2.00 %, EXCEPT WHERE SHOWN ON THE PLANS. LATERALS SHALL BE PLACED AT 90° TO THE SEWER MAIN LINE WHENEVER POSSIBLE.
5. WATER MAINS SHALL BE INSTALLED A MINIMUM CLEAR DISTANCE OF 10 FEET HORIZONTALLY FROM SANITARY SEWER AND SHALL BE INSTALLED TO GO OVER THE TOP OF SUCH SEWERS WITH A MINIMUM OF 18 INCHES OF CLEARANCE AT INTERSECTIONS IN ACCORDANCE WITH THE REQUIREMENTS OF OAR CHAPTER 333, PUBLIC WATER SYSTEMS.

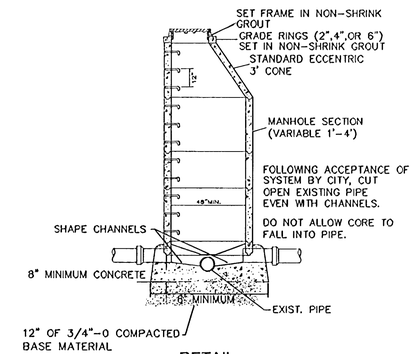

DETAIL
MANHOLE (MH B1) OVER EXIST. LINE
NO SCALE

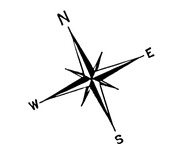

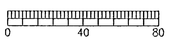

SCALE: 1"=40'

REV.	DESCRIPTION	SUB.	APPR.	DATE
6	CORRECTED LATERAL LOCATIONS	WNH	JRH	7/26/07
5	AS-BUILT	TCM	JRH	5/08/07
4	REVISED MH RIMS TO MATCH REVISED STREET GRADE	TCM	JRH	1/30/07
3	REVISED PER NEW BOUNDARY AND CITY COMMENTS	TCM	JRH	9/01/06
2	ADDED TREE PROTECTION FENCING	TCM	JRH	8/02/06
1	REVISED PER CITY REDLINES	TCM	JRH	7/31/06

REFER TO TRACING FOR LATEST REVISION

REFERENCE INFORMATION AND NOTES:

AS BUILT
A/B DENOTES "AS BUILT" DIMENSIONS

REGISTERED PROFESSIONAL ENGINEER 6219 OREGON JULY 12, 1968 JAMES R. HARRIS
EXPIRES JUNE 30th, 2007

DESIGN	TCM
DRAFTED	TCM
CHECKED	JRH
DATE	6/07/06

D.R. HORTON
c/o J.T. SMITH COMPANIES
4386 SW MACADAM AVE., SUITE 102
PORTLAND, OR 97239

HARRIS-McMONAGLE ASSOCIATES, INC.
ENGINEERS - SURVEYORS
12555 S.W. HALL BLVD.
TIGARD, OR 97223-6287
PHONE: (503) 639-3453

PARKER CREST
4300 PARKER ROAD
SANITARY SEWER PLAN

SCALE 1"=40'
DWG. NAME 15.SAN
SHEET 17 OF 25

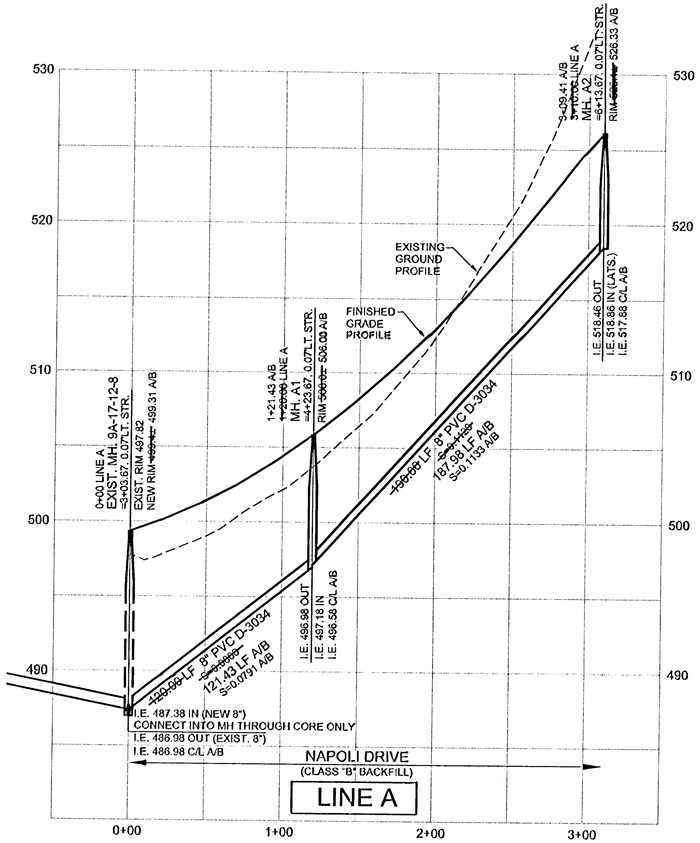

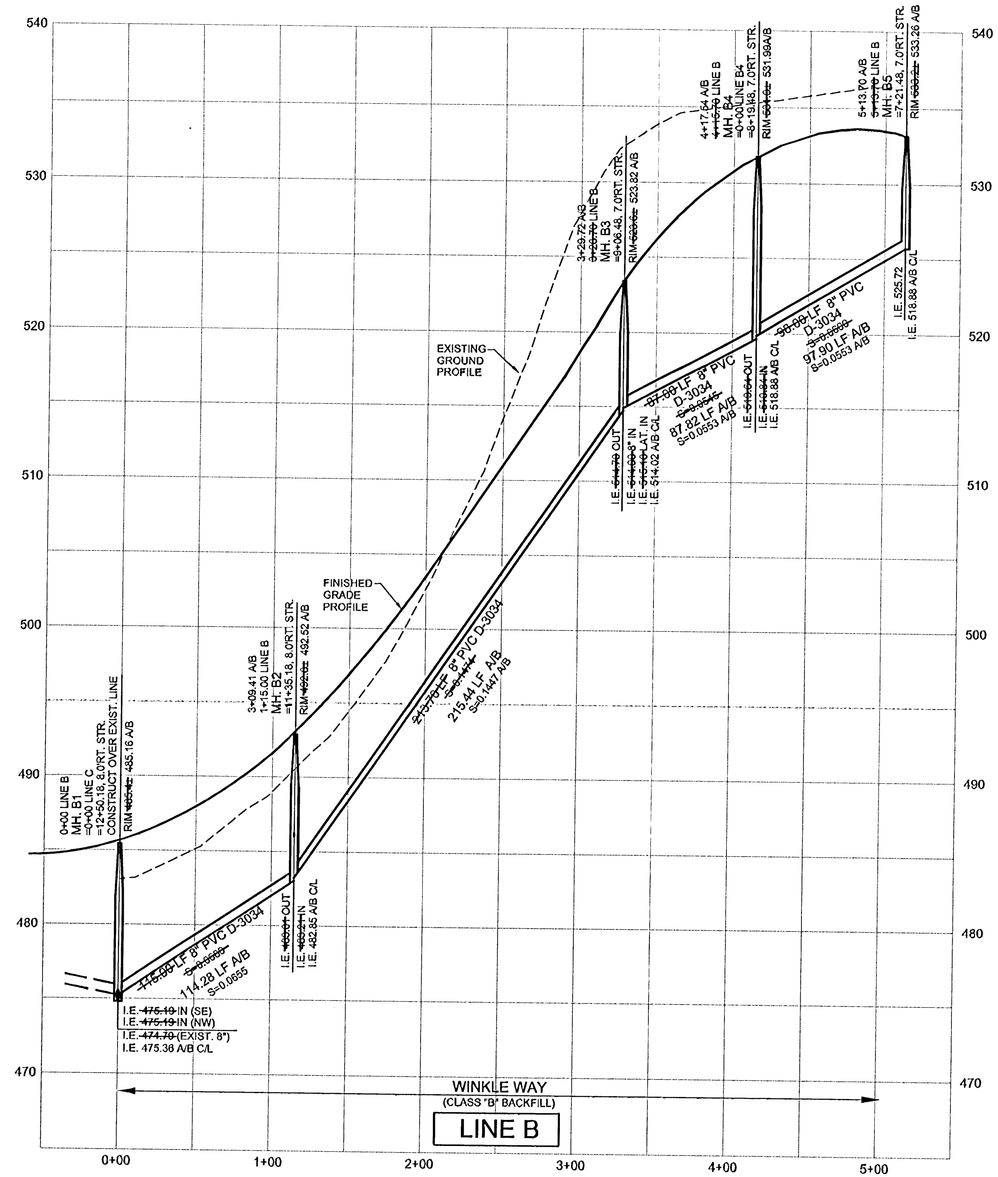

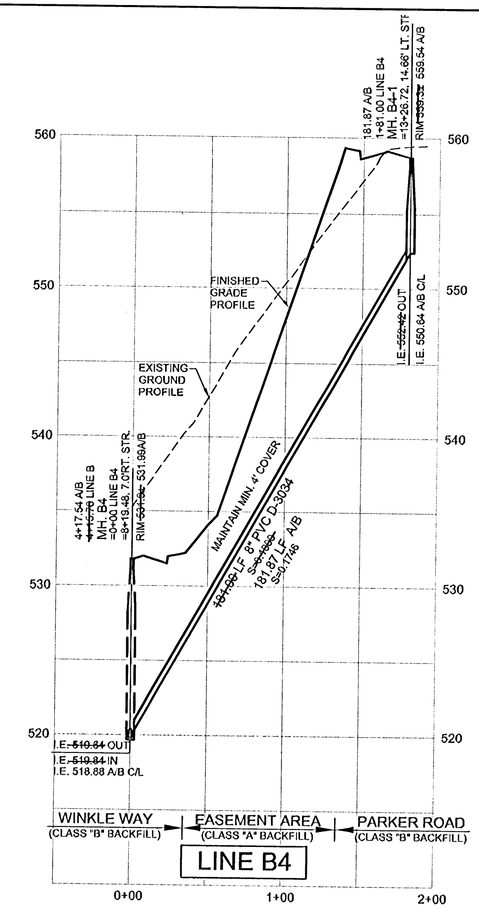

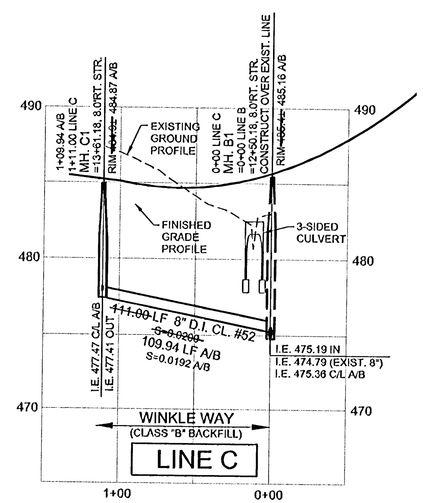

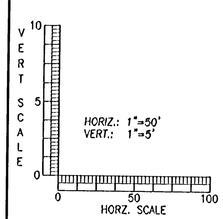

REV.	DESCRIPTION	SUB.	APPR.	DATE
4	AS-BUILT	TCM	JRH	5/08/07
3	REVISED RIM ELEVATIONS TO MATCH STREET GRADES	TCM	JRH	1/30/07
2	REVISED PER NEW BOUNDARY AND CITY COMMENTS	TCM	JRH	9/01/06
1	REVISED PER CITY REDLINES	TCM	JRH	7/31/06

REFER TO TRACING FOR LATEST REVISION

REFERENCE INFORMATION AND NOTES:

AS BUILT
A/B DENOTES "AS BUILT" DIMENSIONS

REGISTERED PROFESSIONAL ENGINEER 6219 OREGON JULY 12, 1988 JAMES R. HARRIS
EXPIRES JUNE 30th, 2007

DESIGN: TCM
DRAFTED: TCM
CHECKED: JRH
DATE: 6/07/06

D.R. HORTON
c/o J.T. SMITH COMPANIES
4388 SW MACADAM AVE., SUITE 102
PORTLAND, OR 97239

HARRIS-McMONAGLE ASSOCIATES, INC.
ENGINEERS - SURVEYORS
12555 S.W. HALL BLVD.
TIGARD, OR 97223-6287
PHONE: (503) 639-3453

PARKER CREST
4300 PARKER ROAD
SANITARY SEWER PROFILE

SCALE: AS SHOWN
DWG. NAME: 16.SAN-P
SHEET 18 OF 25

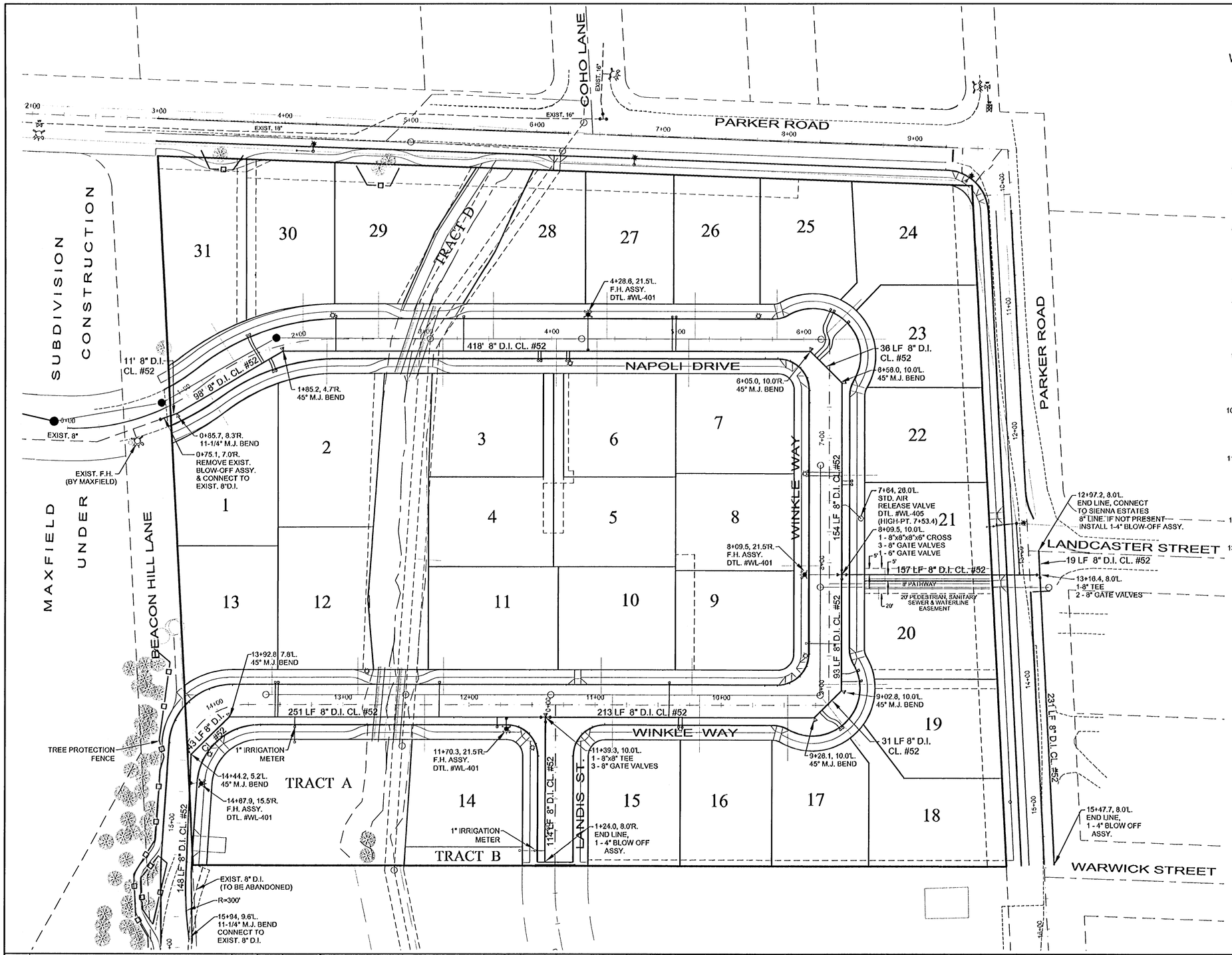

WATERWORKS NOTES:

1. ALL WORK AND MATERIALS SHALL COMPLY WITH THE CITY OF WEST LINN STANDARDS, SPECIFICATIONS AND DETAILS.
2. ALL PIPE AND FITTINGS SHALL BE DUCTILE IRON, CEMENT-LINED OF NEW MANUFACTURE AND MADE IN THE USA. PIPE WILL BE 'TYTON' JOINT DUCTILE IRON, CLASS 52. ALL FITTINGS SHALL BE MJ (MECHANICAL JOINT) UNLESS OTHERWISE SPECIFIED.
3. COVER FOR ALL WATER MAINS IN STREET AND RIGHT-OF-WAYS SHALL BE 36". BACKFILL SHALL BE 3/4"(-) GRAVEL.
4. ALL VALVE OPERATING NUTS SHALL BE WITHIN 36" OF FINISHED GRADE, OTHERWISE VALVE OPERATING NUT EXTENSIONS WILL BE REQUIRED.
5. POURED CONCRETE THRUST BLOCKS OF AT LEAST 8 SQ.FT. OF BEARING SURFACE ARE REQUIRED AT EACH TEE, CROSS AND BEND LOCATION (SEE DETAILS FOR MIN. BEARING AREAS). CONCRETE SHALL BE A MINIMUM OF 3000 P.S.I.
6. FIRE HYDRANT ASSEMBLY CONSISTS OF AN MJ x 6" FLG (FLANGE) TEE, 6" FLG. x MJ GATE VALVE, 6" MJ x MJ HOLDING SPOOL, AND A MODERN MUELLER CENTURION FIRE HYDRANT, A-423, 6" MJ, 5-1/4" MVO, 3-PORT(2-2-1/2" NST HOSE CONNECTION, 1-4-1/2" NST PUMPER), 1-1/2" PENTAGON OPERTATING NUT, OPENING LEFT, COLOR: YELLOW OR APPROVED EQUAL: CLOW MEDALLION F-2546.
7. EACH FIRE HYDRANT ASSEMBLY SHALL BE INSTALLED PER THE CITY STANDARD SPECIFICATIONS AND DETAILS.
8. ALL SANITARY SEWER LINES WITHIN 10 FEET LATERALLY OR 18 INCHES VERTICALLY OF A WATER MAIN SHALL BE ENCASED IN A REINFORCED CONCRETE JACKET 6" THICK FOR A DISTANCE OF 10 FEET ON BOTH SIDES OF THE CROSSING. WHERE CROSSINGS ARE NECESSARY, THEY MUST BE MADE AT APPROXIMATELY 90 DEGREES WITH AT LEAST 18" OF SEPARATION BELOW THE WATER LINE.
9. TRENCH BEDDING, PIPE ZONE AND BACKFILL IN PAVED AREAS WILL BE 3/4-INCH MINUS CRUSHED AGGREGATE COMPACTED TO 95% RELATIVE MAXIMUM DENSITY, AASHTO T-180. UNPAVED AREAS OUTSIDE THE RIGHT OF WAY TO BE CLASS A NATIVE BACKFILL MATERIAL, EXCEPT BEDDING AND PIPE ZONE MATERIAL (REFER TO CITY DETAIL WL-200). UNLESS OTHERWISE NOTED, CLASS A NATIVE BACKFILL IS TO BE COMPACTED TO A MINIMUM OF 95% OF THE MAXIMUM DRY DENSITY, AASHTO T-180.
10. GATE VALVES SHALL BE RESILIENT SEAL, NOT RISING STEM WITH "O" RING PACKING, COMPLYING WITH AWWA CLASS "C" SPECIFICATIONS. THE VALVES SHALL BE DESIGNED TO WITHSTAND A WORKING PRESSURE OF 150 P.S.I. BUTTERFLY VALVES SHALL BE RUBBER SEAL TYPE AND BUBBLE-TIGHT AT 150 P.S.I., AND SHALL CONFORM TO A.W.W.A. C504. VALVE BOXES SHALL BE "VANCOUVER" PATTERN.
11. ALL MAINS SHALL BE TESTED UPON COMPLETION. PRESSURE TESTS SHALL BE IN CONFORMANCE WITH THE CITY OF WEST LINN STANDARDS, WITH A MINIMUM TEST PRESSURE OF 180 P.S.I. WHEN THE PRESSURE TEST IS PERFORMED, THE TEST PRESSURE OF 180 P.S.I. SHALL STABILIZE BEFORE THE TEST BEGINS. SERVICE LINES WILL ALSO BE TESTED TO THE METER LOCATION. THE DURATION OF THE TEST SHALL BE ONE HOUR. ZERO PRESSURE LOSS IS REQUIRED FOR A SUCCESSFUL TEST.
12. ALL WATERLINE PRESSURE AND CHLORINATION TESTING SHALL BE PERFORMED WITH A REPRESENTATIVE FOR THE CITY PRESENT.
13. PRIOR TO BEING PLACED INTO SERVICE, THE WATERLINE SHALL BE FLUSHED, STERILIZED, AND FLUSHED AGAIN ALL IN ACCORDANCE WITH STATE OF OREGON HEALTH DIVISION. PRIOR TO CONNECTION TO ANY EXISTING WATERLINE, A SAMPLE SHALL BE TAKED AND TESTED FOR BACTERIOLOGICAL QUALITY. RESULTS MUST BE WITHIN STANDARDS OF THE STATE OF OREGON.

ALL TEES ARE TO BE FLANGE TYPE, AND GATE VALVES ARE TO BE MECHANICAL JOINT x FLANGE.

ALL VALVES FOR FIRE HYDRANT CONNECTIONS SHALL BE LOCATED ADJACENT TO THE SUPPLY MAIN.

STREET GRADE / SPRINKLER NOTE:

ALL HOMES ARE REQUIRED TO HAVE FIRE SUPPRESSION SPRINKLERS PER T.V.F.D. CODE (STREET GRADE >10%).

REV.	DESCRIPTION	SUB.	APPR.	DATE
5	AS-BUILT, MOVED POND D/W BACK	TCM	JRH	5/08/07
4	REVISED POND ACCESS D/W LOCATION	TCM	JRH	1/30/07
3	REVISED PER NEW BOUNDARY AND CITY COMMENTS	TCM	JRH	9/01/06
2	ADDED TREE PROTECTION FENCING	TCM	JRH	8/02/06
1	REVISED PER CITY REDLINES	TCM	JRH	7/31/06

REFER TO TRACING FOR LATEST REVISION

REFERENCE INFORMATION AND NOTES:

AS BUILT
A/B DENOTES "AS BUILT" DIMENSIONS

REGISTERED PROFESSIONAL ENGINEER 6219 OREGON JULY 12, 1988 JAMES R. HARRIS
EXPIRES JUNE 30th, 2007

DESIGN	TCM
DRAFTED	TCM
CHECKED	JRH
DATE	6/07/06

D.R. HORTON
c/o J.T. SMITH COMPANIES
4388 SW MACADAM AVE., SUITE 102
PORTLAND, OR 97239

HARRIS-McMONAGLE ASSOCIATES, INC.
ENGINEERS - SURVEYORS
12555 S.W. HALL BLVD.
TIGARD, OR 97223-6287
PHONE: (503) 639-3453

PARKER CREST
4300 PARKER ROAD
WATER PLAN

SCALE 1"=40'
DWG. NAME 17.WTR
SHEET 19 OF 25

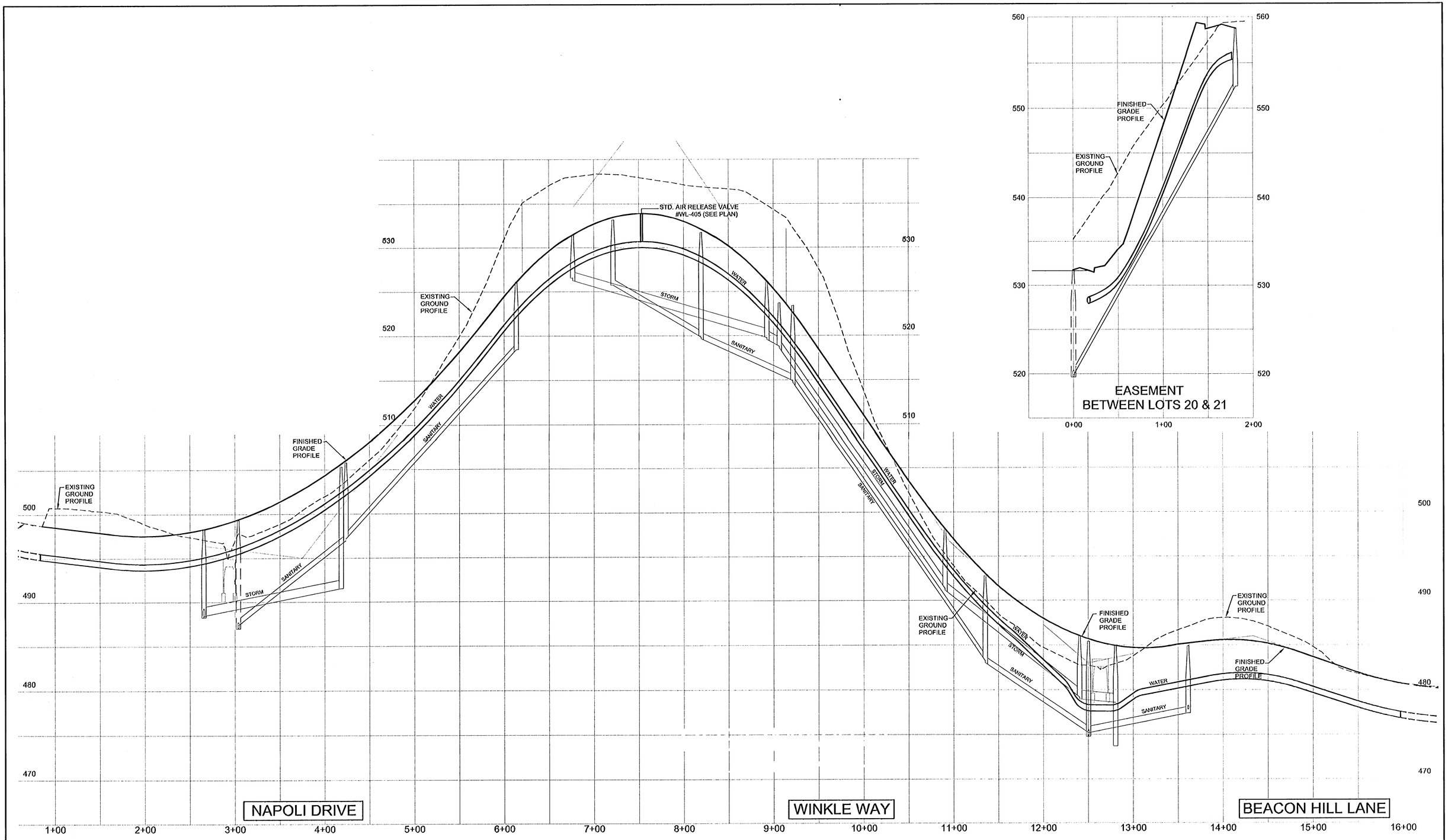

REV.	DESCRIPTION	SUB.	APPR.	DATE
4	AS-BUILT	TCM	JRH	5/08/07
3	REVISED WINKLE WAY PROFILE DUE TO CULVERT REVISION	TCM	JRH	1/30/07
2	REVISED PER NEW BOUNDARY AND CITY COMMENTS	TCM	JRH	9/01/06
1	REVISED PER CITY REDLINES	TCM	JRH	7/31/06

REFER TO TRACING FOR LATEST REVISION

REFERENCE INFORMATION AND NOTES:

AS BUILT
A/B DENOTES "AS BUILT" DIMENSIONS

REGISTERED PROFESSIONAL ENGINEER 6219 OREGON JULY 12, 1988 JAMES R. HARRIS
EXPIRES JUNE 30th, 2007

DESIGN	TCM
DRAFTED	TCM
CHECKED	JRH
DATE	6/07/06

D.R. HORTON
c/o J.T. SMITH COMPANIES
4388 SW MACADAM AVE., SUITE 102
PORTLAND, OR 97239

HARRIS–McMONAGLE ASSOCIATES, INC.
ENGINEERS – SURVEYORS
12555 S.W. HALL BLVD.
TIGARD, OR 97223–8287
PHONE: (503) 639–3453

PARKER CREST
4300 PARKER ROAD
WATER PROFILE

SCALE 1"=40'
DWG. NAME 18.WTR-P
SHEET 20 OF 25

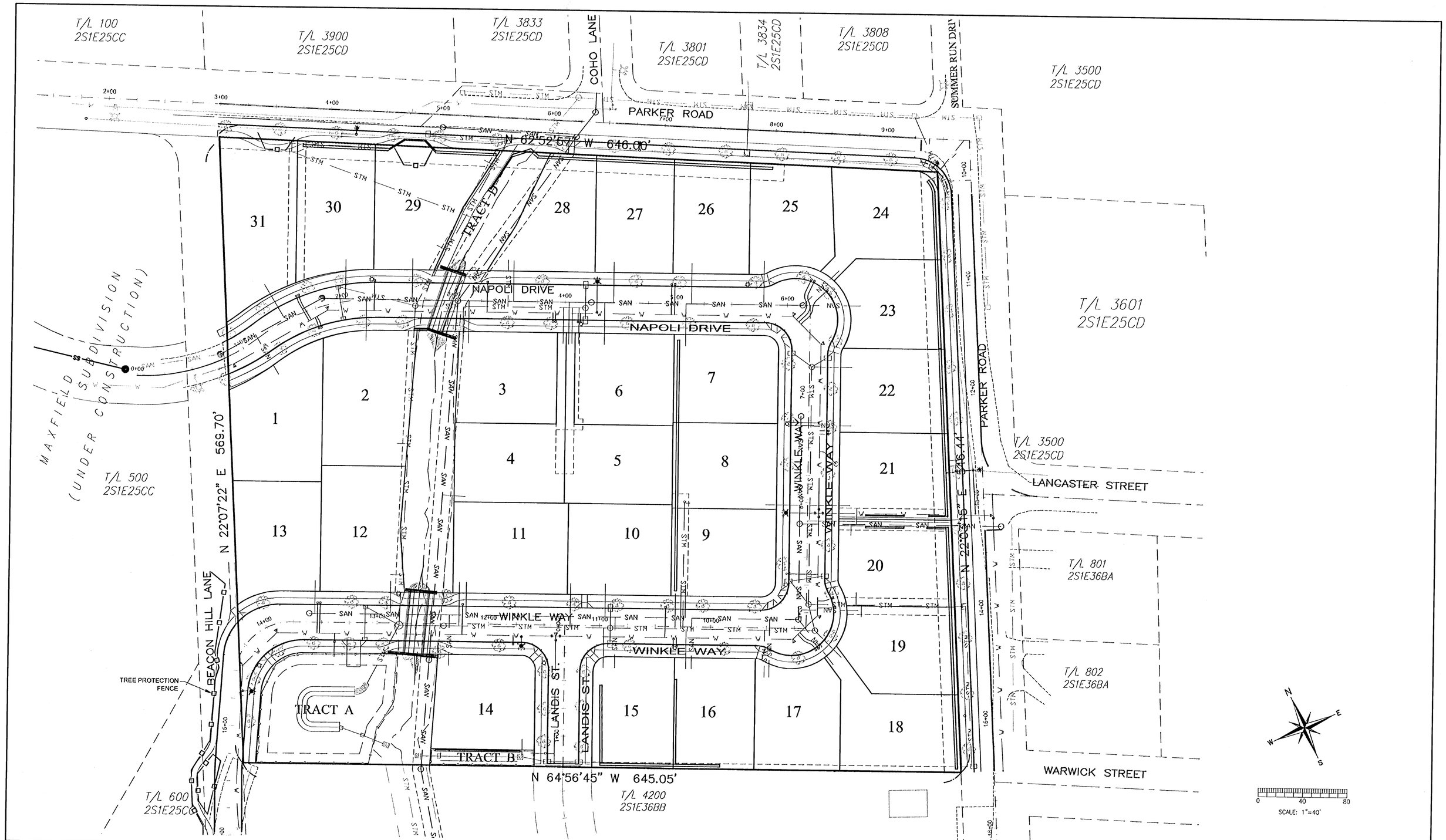

REV.	DESCRIPTION	SUB.	APPR.	DATE
6	AS-BUILT, RELOCATED POND ACCESS BACK	TCM	JRH	5/08/07
5	RELOCATED POND ACCESS D/W, STREET TREES	TCM	JRH	1/30/07
4	REVISED STREET LIGHT LOCATIONS	TCM	JRH	9/20/06
3	REVISED PER NEW BOUNDARY	TCM	JRH	9/01/06
2	ADDED TREE PROTECTION FENCING	TCM	JRH	8/02/06
1	REVISED PER CITY REDLINES	TCM	JRH	7/31/06

REFER TO TRACING FOR LATEST REVISION

REFERENCE INFORMATION AND NOTES:

AS BUILT
A/B DENOTES "AS BUILT" DIMENSIONS

REGISTERED PROFESSIONAL ENGINEER 6219 OREGON JULY 12, 1988 JAMES R. HARRIS
EXPIRES JUNE 30th, 2007

DESIGN	TCM
DRAFTED	TCM
CHECKED	JRH
DATE	6/07/06

D.R. HORTON
c/o J.T. SMITH COMPANIES
4388 SW MACADAM AVE., SUITE 102
PORTLAND, OR 97239

HARRIS–McMONAGLE ASSOCIATES, INC.
ENGINEERS – SURVEYORS
12555 S.W. HALL BLVD.
TIGARD, OR 97223–6287
PHONE: (503) 639–3453

PARKER CREST
4300 PARKER ROAD
COMPOSITE UTILITY PLAN

SCALE 1"=40'
DWG. NAME 19.UTIL
SHEET 21 OF 25

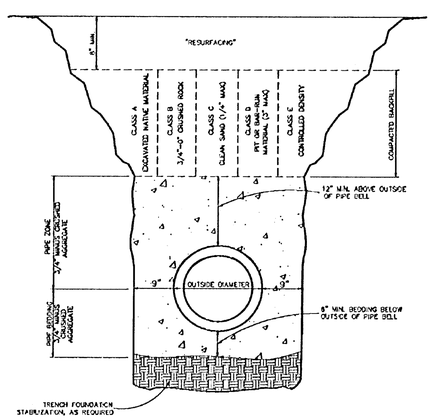

Trench Backfill, Bedding and Pipe Zone

West Linn | DATE: JAN 2000 | DRAWING NO. WL-200 | FILE NO. 00-200

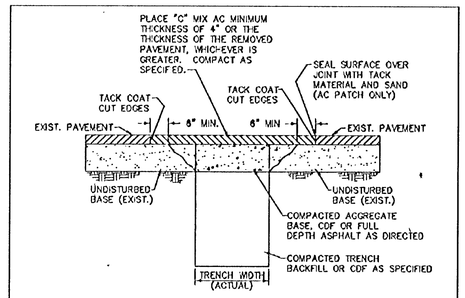

NOTES:
1. ALL EXISTING AC OR PCC PAVEMENT SHALL BE SAWCUT TO NEAT, STRAIGHT LINES PRIOR TO REPAVING.
2. CONCRETE PAVEMENT SHALL BE REPLACED WITH CONCRETE TO A MINIMUM THICKNESS OF REMOVED PAVEMENT, WHICHEVER IS GREATER.
3. IF EXISTING BASE MATERIAL IS CTB OR ATB, THEN REPLACEMENT BASE MATERIAL SHALL MATCH EXISTING.
4. ALL UTILITIES SHALL HAVE A MINIMUM COVER OF 36".
5. ALL TRENCH BACKFILL SHALL BE COMPACTED TO 95% OF MAXIMUM DENSITY PER AASHTO T-180 OR AS SPECIFIED IN THE CONTRACT DOCUMENTS.
6. ALL TRENCH BACKFILL AND PATCHING SHALL CONFORM TO THE STANDARDS AND SPECIFICATIONS OF THE CITY OF WEST LINN.
7. APPROVED CDF SHALL BE USED OR 3/4 – 0" GRAVEL BACKFILL SHALL BE PLACED AND COMPACTED IN A MAXIMUM OF 6" LIFTS.

Street T-Cut

West Linn | DATE: May 2005 | DRAWING NO. WL-203 | FILE NO. 00-203

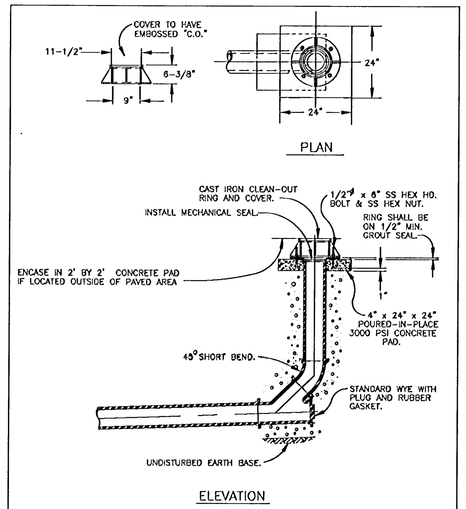

Standard Clean Out

West Linn | DATE: MAY 2005 | DRAWING NO. WL-206 | FILE NO. 00-206

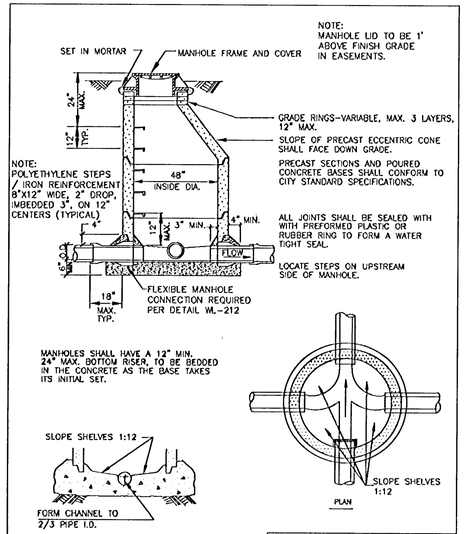

NOTE:
CHANNELS MUST BE ABLE TO PASS A 7"X30" CYLINDER INTO PIPES. SHELF SHALL NOT BE BELOW THE TOP OF THE PIPE.

Standard Manhole for Less than 36" Pipe

West Linn | DATE: JAN 2000 | DRAWING NO. WL-207 | FILE NO. 00-207

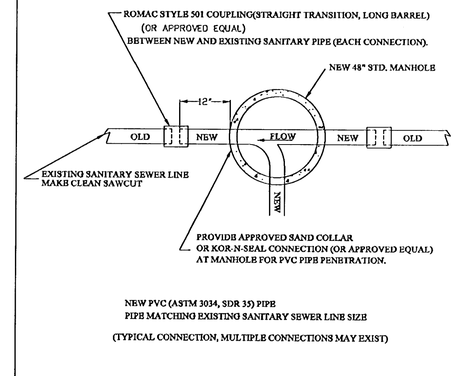

NEW PVC (ASTM 3034, SDR 35) PIPE
PIPE MATCHING EXISTING SANITARY SEWER LINE SIZE

(TYPICAL CONNECTION, MULTIPLE CONNECTIONS MAY EXIST)

Manhole Detail-Plan View New Manhole to Existing Sewer Line Connection

West Linn | DATE: JAN 2000 | DRAWING NO. WL-210 | FILE NO. 00-210

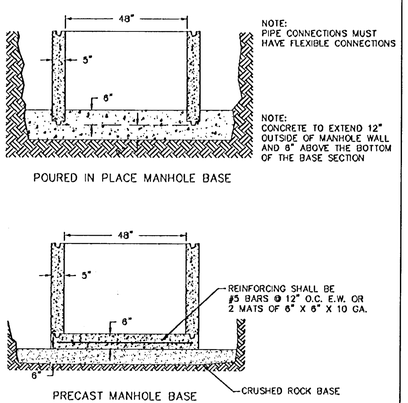

NOTE:
USE 3300 PSI CONCRETE FOR EITHER MANHOLE BASE.

Manhole Base

West Linn | DATE: JAN 2000 | DRAWING NO. WL-211 | FILE NO. 00-211

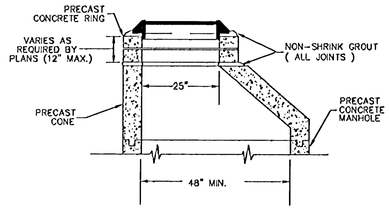

PRECAST RING EXTENSION FOR TYPICAL MANHOLE

Precast Ring Extension

West Linn | DATE: JAN 2000 | DRAWING NO. WL-213 | FILE NO. 00-213

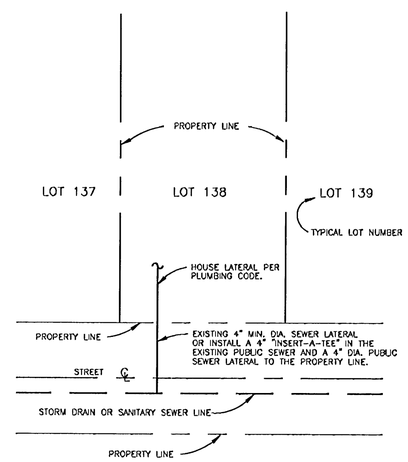

TYPICAL CONNECTION FOR SINGLE FAMILY RESIDENCE.

Sewer Connection Single Family

West Linn | DATE: JAN 2000 | DRAWING NO. WL-216 | FILE NO. 00-216

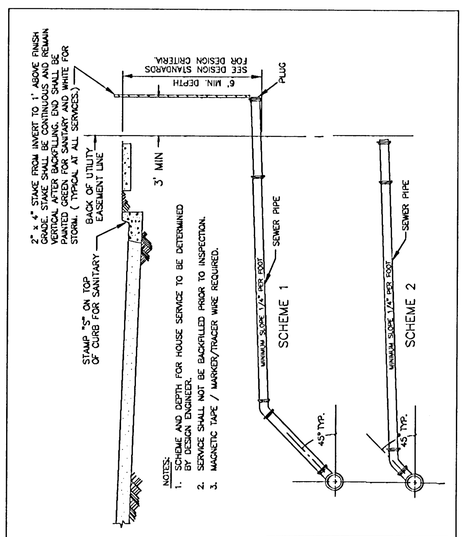

NOTES:
1. SCHEME AND DEPTH FOR HOUSE SERVICE TO BE DETERMINED BY DESIGN ENGINEER.
2. SERVICE SHALL NOT BE BACKFILLED PRIOR TO INSPECTION.
3. MAGNETIC TAPE / MARKER/TRACER WIRE REQUIRED.

Service Branch

West Linn | DATE: JAN 2000 | DRAWING NO. WL-218 | FILE NO. 00-218

REV.	DESCRIPTION	SUB.	APPR.	DATE

REFER TO TRACING FOR LATEST REVISION

REFERENCE INFORMATION AND NOTES:

DESIGN	TCM
DRAFTED	TCM
CHECKED	JRH
DATE	6/07/06

D.R. HORTON
c/o J.T. SMITH COMPANIES
4386 SW MACADAM AVE., SUITE 102
PORTLAND, OR 97239

HARRIS-McMONAGLE ASSOCIATES, INC.
ENGINEERS - SURVEYORS
12555 S.W. HALL BLVD.
TIGARD, OR 97223-8287
PHONE: (503) 639-3453

PARKER CREST
4300 PARKER ROAD
CITY OF WEST LINN
STANDARD DETAILS (GENERAL 200-218)

SCALE 1"=40'
DWG. NAME CONST BASE
SHEET 22 OF 25

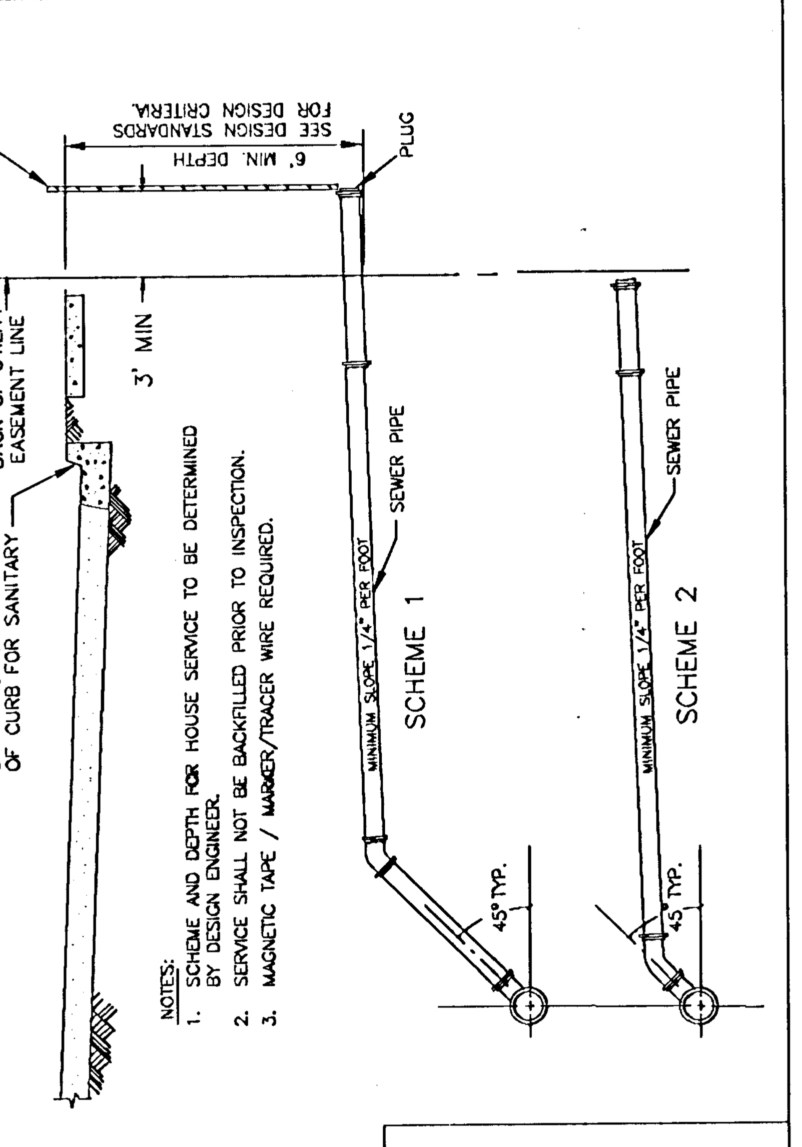

NOTES:
1. SCHEME AND DEPTH FOR HOUSE SERVICE TO BE DETERMINED BY DESIGN ENGINEER.
2. SERVICE SHALL NOT BE BACKFILLED PRIOR TO INSPECTION.
3. MAGNETIC TAPE / MARKER/TRACER WIRE REQUIRED.

2" x 4" STAKE FROM INVERT TO 1' ABOVE FINISH GRADE. STAKE SHALL BE CONTINUOUS AND REMAIN VERTICAL AFTER BACKFILLING. END SHALL BE PAINTED GREEN FOR SANITARY AND WHITE FOR STORM. (TYPICAL AT ALL SERVICES.)

STAMP "S" ON TOP OF CURB FOR SANITARY

Service Branch

DATE: JAN 2000
DRAWING NO. WL-218
FILE NO. 00-218

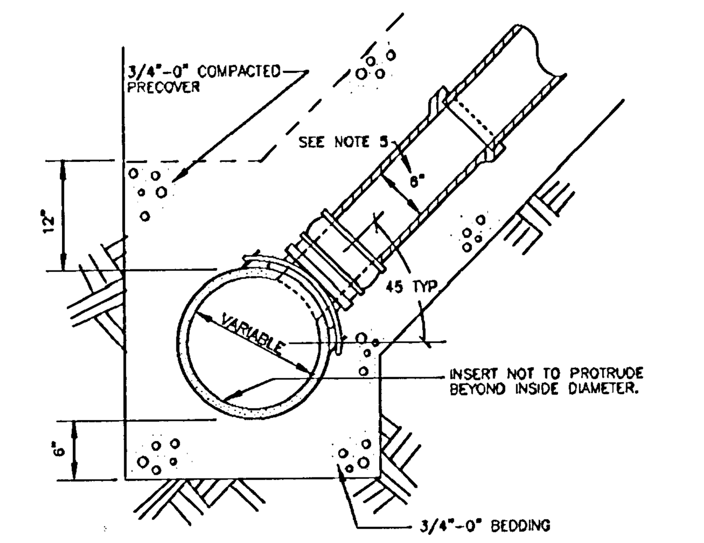

NOTES:
1. A MINIMUM OF 24 HOURS NOTICE IS REQUIRED PRIOR TO A TAP INSPECTION. ALL TRENCHES SHALL BE SHORED IN COMPLIANCE WITH OR-OSHA EXCAVATION RULES, CHAPTER 437, DIVISION "3", SUBDIVISION "P", ADOPTED SEPTEMBER 1, 1990. PUBLIC WORKS INSPECTORS WILL NOT INSPECT A TAP IN A TRENCH WITHOUT LEGAL SHORING.

   THE TAP SHALL BE INSPECTED BEFORE BACKFILL IS ALLOWED AND BEFORE THE SIDE SEWER CONNECTION IS MADE. THE CORE DRILLED "SLUG" IS TO BE SHOWN TO THE INSPECTOR TO INSURE IT WAS REMOVED FROM THE SEWER LINE.
2. ALL SERVICE LINE CONNECTIONS SHALL BE MADE WITH AN APPROVED CONNECTOR MANUFACTURED AND DESIGNED TO CONNECT TO A CORE DRILLED PIPE, FOWLER INSURT-A-TEE, SEAL TIGHT SADDLE, TAP TITE TEE, OR AN APPROVED EQUAL COMMERCIAL TAP.
3. THE CENTERLINE OF TAP IS TO BE ABOVE THE SPRINGLINE.
4. 4" MAXIMUM TAP FOR 8" MAIN (CUT-IN TEE TO BE USED FOR 6" HOUSE BRANCH ON 8" MAIN).
5. 4" HOUSE BRANCH MAY BE USED FOR SINGLE FAMILY LOTS ONLY.

Sewer Service Tap to Existing Sewers for House Laterals

DATE: JAN 2000
DRAWING NO. WL-303
FILE NO. 00-303

NOTES:
1. HYDRANTS TO BE MUELLER CENTURION MDL A-423 ONLY WITH 1 1/2" OPER. NUTS OR CLOW MEDDALION F-2545.
2. HYDRANT COLOR TO BE MILLER EQUIP. ENAMEL O E 40 (SAFETY YELLOW).
3. JOINTS TO BE RESTRAINED BY 3/4" DIA. GALVANIZED STEEL RODS AND THRUST BLOCKS OR MEGA LUGS AND THRUST BLOCKS.
4. ALL FITTINGS IN CONTACT W/CONCRETE SHALL BE WRAPPED IN PLASTIC. HYDRANT DRAIN HOLES TO REMAIN OPEN TO DRAIN ROCK AND OPERATIONAL.
5. MIN. 4 CU. FT. OF 1 1/2"-3/4" CLEAN DRAIN ROCK SHALL BE PLACED AROUND SHOE UP TO A MIN. OF 6" ABOVE DRAIN OUTLETS.
6. WHERE PLANTER STRIP EXISTS, HYDRANT SHALL BE PLACED SO FRONT PORT IS A MINIMUM OF 24" BEHIND FACE OF CURB.
7. WHERE INTEGRAL S/W & CURB EXISTS, HYD. SHALL BE PLACED AT BACK OF SIDEWALK, OR AS DIRECTED BY ENGINEER.
8. BURY OF HYDRANT SHALL BE MEASURED FROM FINISHED GRADE TO BOTTOM OF CONNECTING PIPE.
9. THRUST BLOCK AT FIRE HYDRANT TEE SHALL HAVE A 3.7 SQ. FT. BEARING AREA.
10. HYDRANT VALVE SHALL BE MUELLER RESILIENT WEDGE GATE VALVE #A-2360-16 ONLY.
11. WHERE NO SIDEWALK EXISTS, PLACE A 5'x 5'x 4" THICK A.C. OR CONC. APRON AROUND HYDRANT.
12. NO EXTENTIONS ALLOWED.

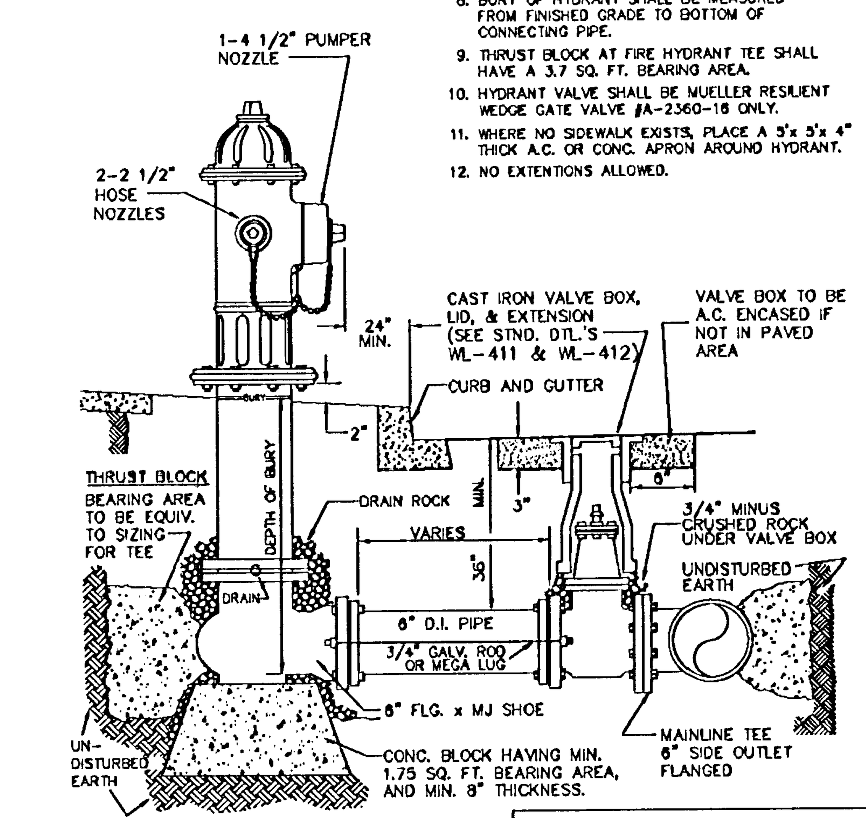

Standard Fire Hydrant Assembly

DATE: JAN 2000
DRAWING NO. WL-401
FILE NO. 00-401

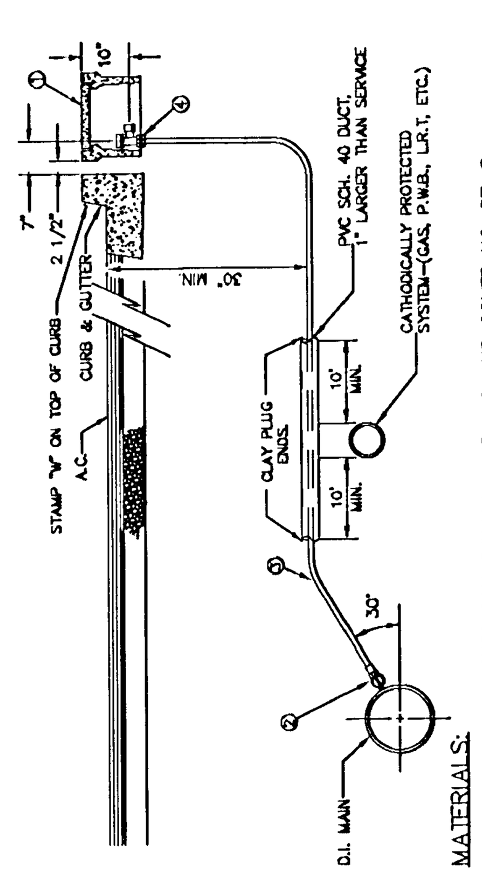

MATERIALS:
1. BROOKS METER BOX, BODY NO. 37, LID AND COVER NO. 37-S.
2. MUELLER CORP. STOP NO. H-15008 OR FORD F1000-4Q SET CORP. STOP WITH OPERATING NUT AT 3 OR 9 O'CLOCK.
3. 1" SOFT TEMPER, TYPE 'K' COPPER TUBING COMPLYING WITH ASTM B-88.
4. MUELLER ANGLE METER STOP NO. H-14258 (FORD NO. KV43-444W-Q).

NOTES:
1. MACHINE DRILLED AND TAPPED ONLY. NO HAND DRILLING IS ALLOWED.
1. SUBSTITUTES FOR ANY MATERIALS SHOWN SHALL BE APPROVED BY THE CITY ENGINEER.
2. ALL PIPE AND STRUCTURE ZONES SHALL BE BACKFILLED USING 3/4" MINUS CRUSHED AGG. AND COMPACTED TO 95% MAX DENSITY AS DETERMINED BY AASHTO T-180.
3. WHEN AN ACTIVE CATHODIC PROTECTED SYSTEM IS ENCOUNTERED, SCH. 40 PVC SHALL BE INSTALLED AS SHOWN ABOVE WITH CLAY PLUG.
4. METER BOX SHALL BE CENTERED OVER THE COMPLETED METER ASSEMBLY.
5. FOR VACANT RESIDENTIAL LOTS, LOCATE SINGLE SERVICE 18" INSIDE SIDE LOT LINE.
6. TAPS INTO MAIN TO BE AT 18" CENTERLINE MIN.
7. ANGLE METER STOPS TO BE 18" FROM PROPERTY LINE AND NOT IN DRIVEWAY APPROACH.

Standard 1" Water Service

DATE: MAY 2005
DRAWING NO. WL-402
FILE NO. 00-402

BLOW-OFF SIZES REQUIRED

MAIN SIZE	BLOW-OFF SIZE
4" TO 6"	2"
8" TO 12"	4"
14" TO 18"	6"
20" & UP	PER ENGR.

NOTES:
1. VALVE BOX SHALL BE PER STANDARD DETAIL WL-411.
2. VALVE BOX TO BE CONCRETE ENCASED AS SHOWN, IF NOT IN PAVED AREA.
3. BLOW-OFF UNIT SHALL BE BACKFILLED WITH 3/4"-0" CRUSHED ROCK AND COMPACTED TO 95% OF MAX. DENSITY DETERMINED BY AASHTO T-180.
4. PLACE BLOW-OFF STANDPIPE 3 FT. INSIDE R.O.W. LINE AT END OF STREET (2 FT. FROM BARRICADE).

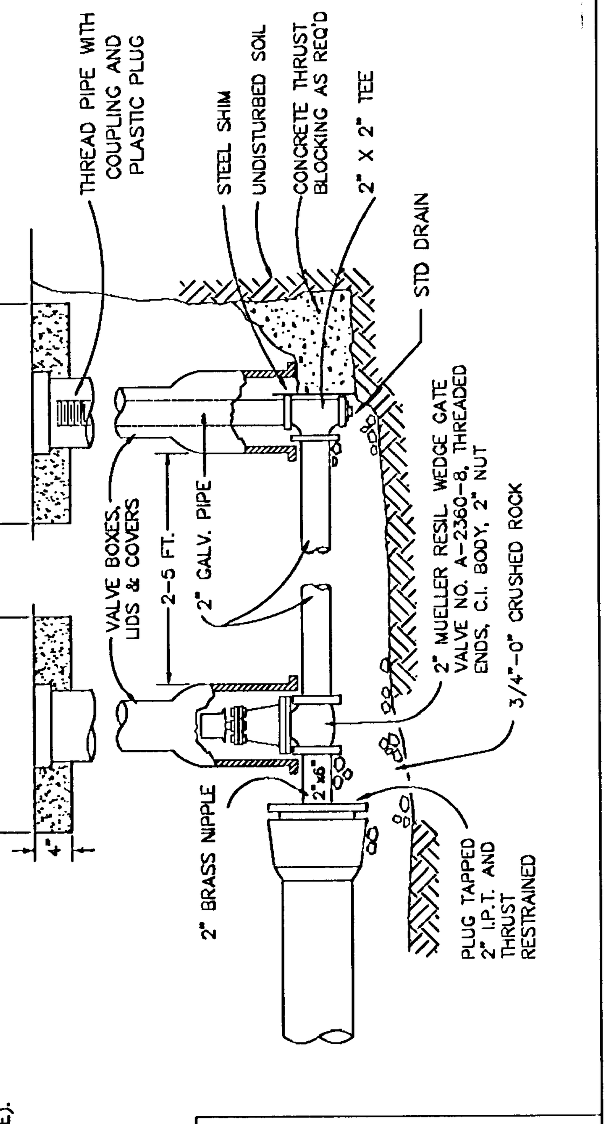

Standard 2" Blow-off Assembly

DATE: MAY 2005
DRAWING NO. WL-404A
FILE NO. 00-404A

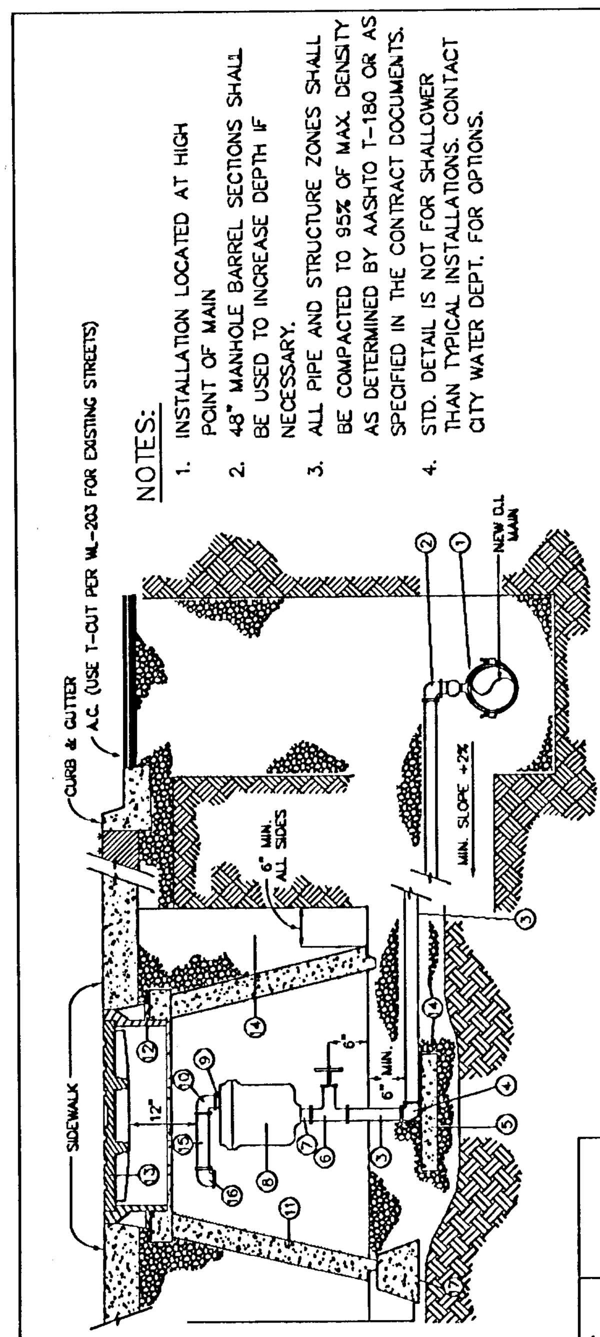

NOTES:
1. INSTALLATION LOCATED AT HIGH POINT OF MAIN
2. 48" MANHOLE BARREL SECTIONS SHALL BE USED TO INCREASE DEPTH IF NECESSARY.
3. ALL PIPE AND STRUCTURE ZONES SHALL BE COMPACTED TO 95% OF MAX. DENSITY AS DETERMINED BY AASHTO T-180 OR AS SPECIFIED IN THE CONTRACT DOCUMENTS.
4. STD. DETAIL IS NOT FOR SHALLOWER THAN TYPICAL INSTALLATIONS. CONTACT CITY WATER DEPT. FOR OPTIONS.

MATERIALS:
1. ROCKWELL NO. 317 SERVICE SADDLE WITH STAINLESS STRAPS
2. MUELLER NO. H15045 2" CORPORATION STOP WITH 1/4 BEND ADAPT (I.P.T. MUELLER 110 CTS)
3. 2" X VARIABLE LENGTH BRASS I.P.T. NIPPLE
4. 2" BRASS 90 DEGREE ELL (MUELLER 110 CTS)
5. 12" X 12" X 4" CONCRETE BLOCK
6. NIBCO NO. 113 2" BRASS GATE VALVE
7. 2" X 3" BRASS I.P.T. NIPPLE
8. 2" AIR RELEASE VALVE (VAL-MATIC #38 OR APCO #205 FOR TYPICAL INSTALLATIONS, IN SOME INSTANCES THE CITY MAY REQUIRE COMBINATION AIR RELEASE & VACUUM UNIT.) INSTALL WALL BRACKETS TO SUPPORT VALVE AS NECESSARY.
9. 1/2" X 1 1/2" OR 2" X 1 1/2" BRASS I.P.T. NIPPLE
10. 1/2" OR 2" BRASS 90 DEGREE ELL (F.M. I.P.T. X F.M. I.P.T.)
11. STD. 48" CONCRETE MANHOLE CONE
12. FRAME PER STD. DWG. WL-214.
13. TAMPERPROOF MANHOLE COVER PER STD. DWG. WL-214.
14. 3/4" MINUS CRUSHED AGG.
15. 1/2" X 6" OR 2" X 6" BRASS NIPPLE, I.P.T.
16. 1/2" OR 2" BRASS 90 DEGREE ELL WITH SCREEN ON OUTLET
17. 3 EA. 12" CONCRETE PIER BLOCKS

Standard Air Release Valve Unit

DATE: JAN 2000
DRAWING NO. WL-405
FILE NO. 00-405

FITTING SIZE (Inches)	TEE, WYE, & ① HYDRANTS	STRADDLE BLOCK ②	90° BEND ③ PLUGGED CROSS TEE PLUGGED-RUNS	45° BEND ④	22 1/2° BEND ④	11 1/2° BEND ④
2	*	*	*	*	*	*
4	1.7	2.1	2.4	1.3	*	*
6	3.7	4.9	5.3	2.9	1.5	*
8	6.7	8.7	9.5	5.1	2.7	1.3
10	10.5	13.6	14.8	8	4.1	2
12	15.1	19.6	21.3	11.6	5.9	2.9
14						
16	26.8	34.8	37.9	20.5	10.4	5.2
18	33.9	44	47.9	25.9	12.8	6.7
LARGER	**	**	**	**	**	**

BEARING AREA OF THRUST BLOCKS (sq. ft.)

1. ALL VALUES ARE BASED ON THE FOLLOWING ASSUMPTIONS: AVG. PRESSURE = 100 PSI X 2 (safety factor); 1500 PSF SOIL BEARING CAPACITY; NORMAL DISTRIBUTION DESIGN VELOCITY NOT TO EXCEED 5 F/S.
2. ALL FITTINGS SHALL BE WRAPPED IN PLASTIC PRIOR TO PLACEMENT OF CONCRETE.
3. BEARING SURFACE OF THRUST BLOCKING SHALL BE AGAINST UNDISTURBED SOIL
4. ALL CONCRETE MIX SHALL HAVE A MIN. 28 DAY STRENGTH OF 3000 PSI.
5. ALL PIPE ZONES SHALL BE GRAVEL FILLED AND COMPACTED.
6. THRUST BLOCKS FOR PLUGGED CROSS AND PLUGGED TEE SHALL HAVE #4 REBAR LIFTING LOOPS INSTALLED AS SHOWN.
7. VERTICAL THRUST DETAILS-SEE DWG. WL-407.
8. STRADDLE BLOCK DETAILS-SEE DWG. WL-408.

* BLOCK TO UNDISTURBED TRENCH WALLS

** THRUST BLOCKS FOR PIPES LARGER THAN 18" WILL BE INDIVIDUALLY DESIGNED BY THE ENGINEER.

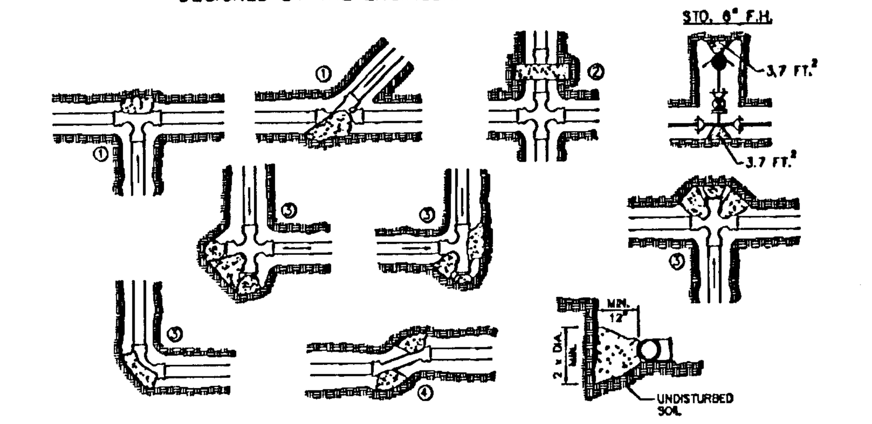

Horizontal Thrust Blocking

DATE: JAN 2000
DRAWING NO. WL-406
FILE NO. 00-406

NOTES:
1. GRAVITY VERTICAL THRUST BLOCKS SHALL BE DESIGNED BY THE ENGINEER.
2. KEEP CONCRETE CLEAR OF JOINT AND JOINT ACCESSORIES. FITTINGS SHALL BE WRAPPED IN PLASTIC PRIOR TO PLACEMENT OF CONCRETE.
3. CONCRETE THRUST BLOCKING SHALL BE POURED AGAINST UNDISTURBED EARTH.
4. CONCRETE MIX SHALL HAVE A MIN. 28 DAY STRENGTH OF 3300 P.S.I.
5. THRUST BLOCK VOLUMES FOR VERTICAL BENDS HAVING UPWARD RESULTANT THRUSTS ARE BASED ON TEST PRESSURE OF 150 P.S.I.G. AND THE WEIGHT OF CONCRETE = 4050 LBS./CU.YD.
6. VERTICAL BENDS THAT REQUIRE A THRUST BLOCK VOLUME EXCEEDING 5 CUBIC YARDS REQUIRE SPECIAL BLOCKING DETAILS. SEE PLANS FOR VOLUMES SHOWN INSIDE HEAVY LINE IN TABLE.
7. PAYMENT SHALL BE THE SAME AS FOR HORIZONTAL THRUST BLOCKS.
8. ALL REBAR SHALL BE GALVANIZED IN ACCORDANCE WITH ASTM-123 (MIN. 3.4 MIL). REBAR SHALL BE BENT BEFORE GALVANIZATION, AND LAST 4" OF BAR SHALL BE BENT 90 DEGREES WITH A 1/2" RADIUS BEND. REBAR SHALL BE TIGHTLY FIT TO RESTRAINED FITTING.
9. FOR HORIZONTAL THRUST BLOCK DETAILS SEE DWG NO. WL-406.

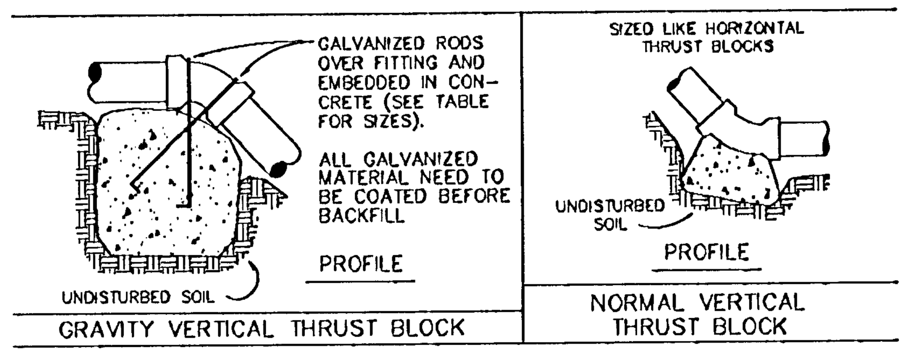

GRAVITY VERTICAL THRUST BLOCK

NORMAL VERTICAL THRUST BLOCK

VOLUME OF THRUST BLOCK IN CUBIC YARDS (VERTICAL BENDS)

FITTING SIZE	BEND ANGLE 45°	22 1/2°	11 1/4°
4	1.1	0.4	0.2
6	2.7	1.0	0.4
8	4.0	1.5	0.6
10	6.0	2.3	0.9
12	8.5	3.2	1.3
14	11.5	4.3	1.8
16	14.8	5.6	2.3

FITTING SIZE	ROD SIZE	EMBED-MENT
12" AND LESS	#6	30"
14" - 16"	#8	36"

Vertical Thust Blocking

DATE: JAN 2000
DRAWING NO. WL-407
FILE NO. 00-407

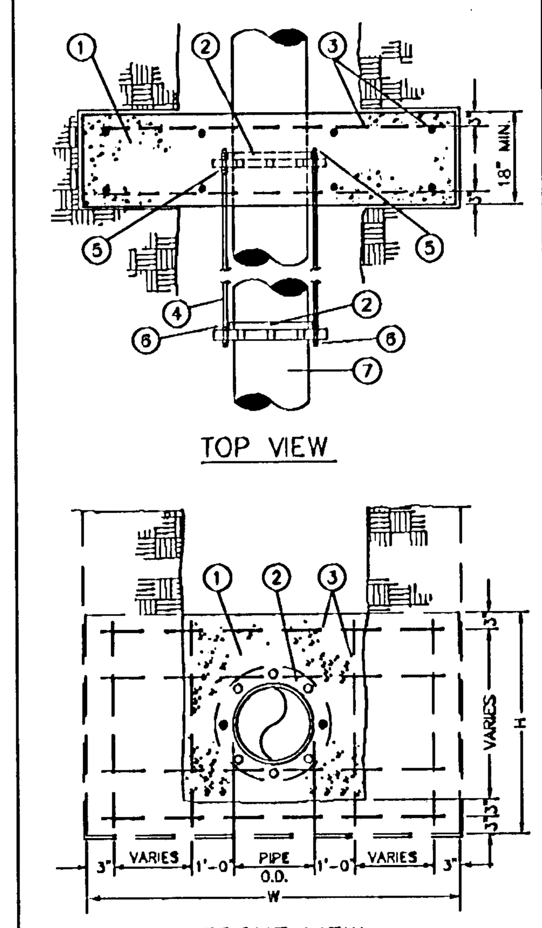

TOP VIEW

FRONT VIEW

MATERIALS:
1. CONCRETE STRADDLE BLOCK.
2. UNI-FLANGE, SERIES 400C, CLASS 125
3. #4 REBAR EACH WAY, 12" O/C.
4. 3/4" ALL THREAD GALVANIZED STEEL TIE RODS, QUANTITY PER ENGINEER.
5. 3/4" GALVANIZED NUTS, 2-EACH SIDE
6. 3/4" GALVANIZED NUTS, 1-EACH SIDE
7. FLANGED FITTING

NOTES:
1. STRADDLE BLOCKS SHALL BE DESIGNED INDIVIDUALLY BY THE ENGINEER AND SHALL BE BASED ON THE FOLLOWING:
   a.) 200 PSI WATER PRESSURE
   b.) SOIL BRG. CAPACITY, STEEL SIZE AND SPACING BY THE ENGINEER.
2. BEARING AREA OF BLOCK SHALL BE AGAINST UNDISTURBED SOIL.
3. STRADDLE BLOCK SHALL HAVE A MINIMUM OF 18" COVER.
4. CONCRETE SHALL HAVE A MIN. 28-DAY STRENGTH OF 3300 PSI
5. ALL FITTINGS WITHIN THE CONC. SHALL BE WRAPPED IN PLASTIC OR BE COATED W/ KOPPER'S #50.
6. STRADDLE BLOCK HEIGHT(H) & WIDTH(W) SHALL BE DETERMINED BY THE ENGINEER.

Standard Straddle Block

DATE: JAN 2000
DRAWING NO. WL-408
FILE NO. 00-408

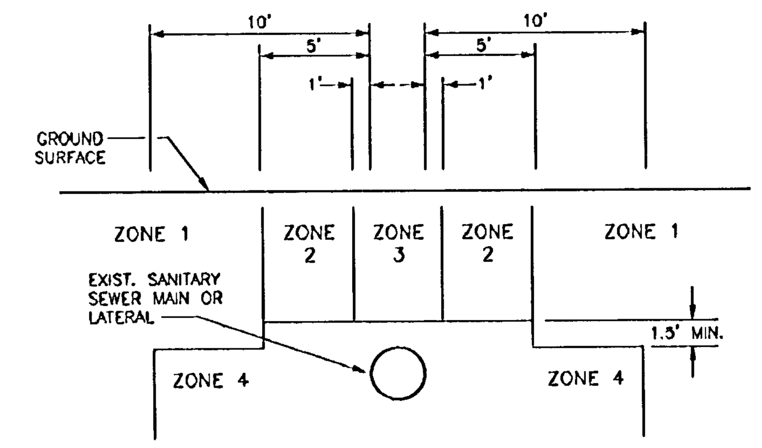

ZONE 1: ONLY CROSSING RESTRICTIONS APPLY
ZONE 2: CASE-BY-CASE DETERMINATION
ZONE 3: PARALLEL WATERLINE PROHIBITED
ZONE 4: PARALLEL WATERLINE PROHIBITED

NOTES:
1. WHERE THE PROPOSED WATERLINE WILL BE INSTALLED PARALLEL TO AN EXISTING GRAVITY SANITARY SEWER MAIN OR LATERAL LINE, THE SEPARATION BETWEEN THE TWO SHALL BE AS INDICATED ABOVE.
2. CROSSINGS:
   a.) WHEREVER POSSIBLE, THE BOTTOM OF THE WATERLINE SHALL BE 1.5 FEET ABOVE THE TOP OF THE SEWER LINE, AND ONE FULL LENGTH OF WATERLINE SHALL BE CENTERED AT THE CROSSING.
   b.) WHERE IT IS NOT POSSIBLE FOR THE WATER LINE TO BE 1.5 FEET ABOVE THE SEWER LINE, OR THE WATERLINE PASSES UNDER THE SEWER LINE, THE EXISTING SEWER LINE SHALL BE EXPOSED FOR A DISTANCE OF 10 FEET ON EACH SIDE OF THE CROSSING, AND SHALL BE REPLACED WITH C-900 PVC, DR-18, DR-25 OR CLASS 50 DUCTILE IRON PIPE AS APPROVED BY THE CITY ENGINEER, AND A LENGTH OF WATER PIPE SHALL BE CENTERED AT THE CROSSING, OR AS APPROVED BY THE CITY ENGINEER.

Standard Sanitary Sewer Crossing

DATE: JAN 2000
DRAWING NO. WL-409
FILE NO. 00-409

REV.	DESCRIPTION	SUB.	APPR.	DATE
1	ADDED DETAIL WL-303	TCM	JRH	7/31/06

REFER TO TRACING FOR LATEST REVISION

REFERENCE INFORMATION AND NOTES:

DESIGN TCM
DRAFTED TCM
CHECKED JRH
DATE 6/07/06

D.R. HORTON
c/o J.T. SMITH COMPANIES
4388 SW MACADAM AVE., SUITE 102
PORTLAND, OR 97239

HARRIS-McMONAGLE ASSOCIATES, INC.
ENGINEERS - SURVEYORS
12555 S.W. HALL BLVD.
TIGARD, OR 97223-6287
PHONE: (503) 639-3453

PARKER CREST
4300 PARKER ROAD
CITY OF WEST LINN
STANDARD DETAILS (SANITARY & WATER 300-409)

SCALE 1"=40'
DWG. NAME CONST BASE
SHEET 23 OF 25

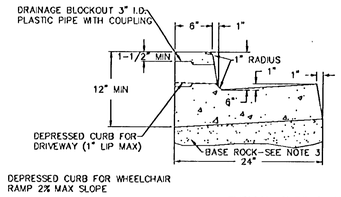

TYPICAL CURB & GUTTER

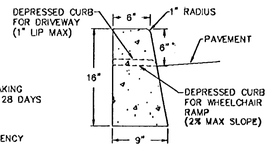

TYPICAL STRAIGHT CURB

NOTES:
1. CONCRETE SHALL HAVE A BREAKING STRENGTH OF 3300 PSI AFTER 28 DAYS
2. CONTRACTION JOINTS
   A) TO BE PROVIDED
      -AT EACH POINT OF TANGENCY
      -AT EACH COLD JOINT
      -AT EACH SIDE OF INLET STRUCTURES
      -AT BOTH SIDES OF AN APPROACH
   B) SPACING TO BE NOT MORE THAN 15 FEET
   C) THE DEPTH OF THE JOINT SHALL BE AT LEAST 1/3 OF THE THICKNESS OF CONCRETE
   D) EXPANSION JOINTS SHALL NOT BE USED
3. BASE ROCK - 1-1/2"-0", 95% COMPACTION ROCK SHALL BE TO SUBGRADE OF THE STREET SECTION OR 4" IN DEPTH, WHICHEVER IS GREATER
4. DRAINAGE BLOCK - 3" DIA. PLASTIC PIPE
   A) DRAINAGE ACCESS THROUGH EXISTING CURBS SHALL BE DONE BY:
      -CORE DRILLING
      -VERTICAL SAWCUT OF CURB 18" EACH SIDE OF DRAIN AND RE-POURED TO FULL DEPTH OF CURB
5. STAMP TOP OF CURB WITH "W" AT WATER SERVICE CROSSING AND "S" AT SANITARY LATERAL CROSSING

Typical Curbs

West Linn | DATE: JAN 2000 | DRAWING NO. WL-501 | FILE NO. 00-501

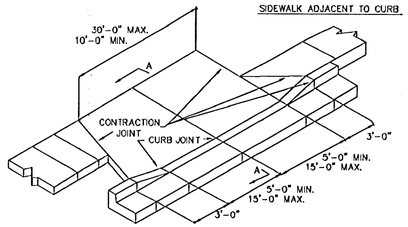

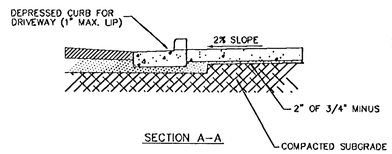

SECTION A-A

NOTES

1. CONCRETE SHALL HAVE A MINIMUM BREAKING STRENGTH OF 3300 PSI AFTER 28 DAYS, 6 SACK MIX.
2. CURB SHALL BE TROWELED JOINT WITH A MIN. 1/2" RADIUS ALONG BACK OF CURB.
3. DRIVEWAY SHALL BE A MINIMUM 6" THICK.

Residential Driveway

West Linn | DATE: JAN 2000 | DRAWING NO. WL-503 | FILE NO. 00-503

PLAN

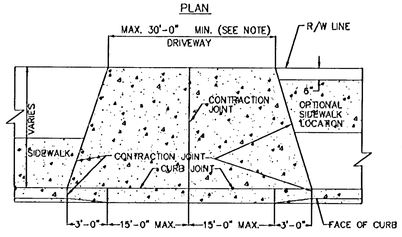

NOTE: ONE-WAY TRAFFIC - MIN. 15' DRIVEWAY
TWO-WAY TRAFFIC - MIN. 24' DRIVEWAY

ELEVATION

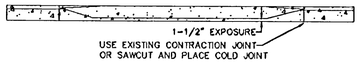

SECTION A-A

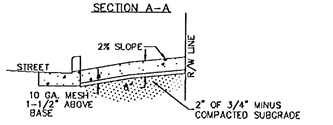

NOTES

1. CONCRETE SHALL HAVE A MINIMUM BREAKING STRENGTH OF 3300 PSI AFTER 28 DAYS, 6 SACK MIX.
2. CURB JOINT SHALL BE A TROWELED JOINT WITH A MIN. 1/2" RADIUS ALONG BACK OF CURB.
3. DRIVEWAY SHALL BE A MINIMUM 6" THICK.

Commercial Driveway

West Linn | DATE: JAN 2000 | DRAWING NO. WL-504 | FILE NO. 00-504

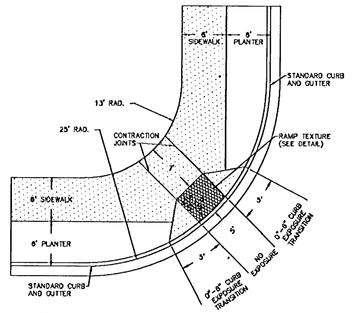

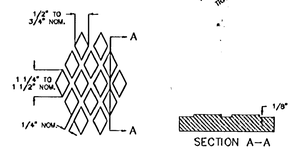

SECTION A-A

RAMP TEXTURE DETAIL

NOTES:
1. THE "AMERICANS WITH DISABILITIES ACT" (ADA) REQUIRES THAT ACCESS RAMPS TO SIDEWALKS CONFORM TO ALL FEDERAL GUIDELINES. EXCEPTIONS TO THE REQUIREMENTS IN THIS DRAWING MUST BE APPROVED BY THE CITY ENGINEER.
2. NO ABOVE GROUND UTILITIES ARE PERMITTED WITHIN RAMP AREA.
3. RAMP SURFACE SHALL BE TEXTURED WITH RAISED DIAMOND TEXTURE. TEXTURING SHALL BE DONE WITH AN EXPANDED METAL GRATE STAMPED INTO THE CONCRETE.
4. CONCRETE STRENGTH SHALL BE 3300 PSI.
5. PLACE CONTRACTION JOINTS AS SHOWN ABOVE.
6. WHEN EITHER OPPOSING CURB RAMP HAS AN EXISTING TWIN RAMP, USE DETAIL WL-507B.

Single Curb Ramp (For Use At Intersection of (2) Local Streets Only)

West Linn | DATE: JAN 2000 | DRAWING NO. WL-507A | FILE NO. 00-507A

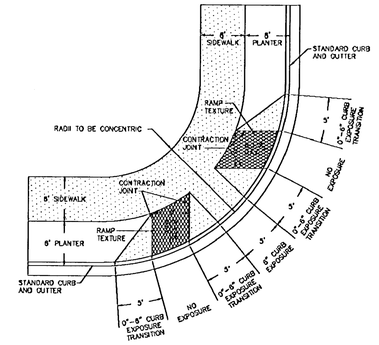

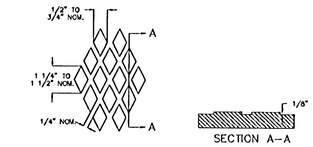

SECTION A-A

RAMP TEXTURE DETAIL

NOTES:
1. THE "AMERICANS WITH DISABILITIES ACT" (ADA) REQUIRES THAT ACCESS RAMPS TO SIDEWALKS CONFORM TO ALL FEDERAL GUIDELINES. EXCEPTIONS TO THE REQUIREMENTS IN THIS DRAWING MUST BE APPROVED BY THE CITY ENGINEER.
2. NO ABOVE GROUND UTILITIES ADRE PERMITTED WITHIN RAMP AREA.
3. RAMP SURFACE SHALL BE TEXTURED WITH RAISED DIAMOND TEXTURE. TEXTURING SHALL BE DONE WITH AN EXPANDED METAL GRATE STAMPED INTO THE CONCRETE.
4. CONCRETE STRENGTH SHALL BE 3300 PSI.
5. PLACE CONTRACTION JOINTS AS SHOWN ABOVE.
5. FOR INTERSECTING LOCAL STREETS USE DETAIL WL-507A.

Twin Curb Ramp

West Linn | DATE: JAN 2000 | DRAWING NO. WL-507B | FILE NO. 00-507B

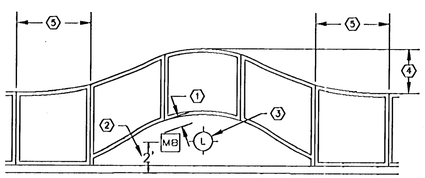

SPECIFICATIONS

1. MIN. 3" CLEARANCE BETWEEN FACE OF SIDEWALK & CLOSEST POINT ON BACK OF MAILBOX.
2. CENTER OF MAILBOX SHALL BE 2' FROM FACE OF CURB.
3. LIGHT POLES & FIRE HYDRANTS ARE TO BE CENTERED IN ISLAND.
4. 2' FOR FIRE HYDRANTS & LIGHTPOLES
   3' FOR MAILBOXES
5. THE REVERSE CURVE SHALL EXTEND 5' BEYOND THE RE-ROUTED AREA.

GENERAL NOTES

1. SIDEWALKS TO BE RE-ROUTED AROUND ALL LIGHT POLES, MAILBOXES, & FIRE HYDRANTS THAT EXIST IN THE SIDEWALK AREA.
2. MAILBOXES SHALL NOT BE INSTALLED ADJACENT TO THE FIRE HYDRANTS.
3. SIDEWALKS SHALL NOT BE RE-ROUTED IF THE EXISTING METER BOXES, UTILITY POLES, ETC., WILL BE IN RE-ROUTED SIDEWALK.
4. IF THE SIDEWALK IS IN PLACE PRIOR TO THE INSTALLATION OF THE LIGHT POLE, MAILBOX, OR FIRE HYDRANT, THEN THE SIDEWALK SHALL BE REMOVED AND RE-ROUTED.

Concrete Sidewalk Clearances for Curb Tight Sidewalks

West Linn | DATE: JAN 2000 | DRAWING NO. WL-509 | FILE NO. 00-509

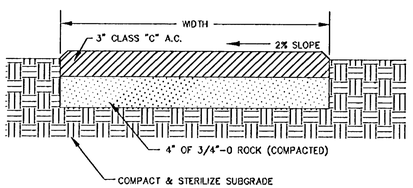

-OR-

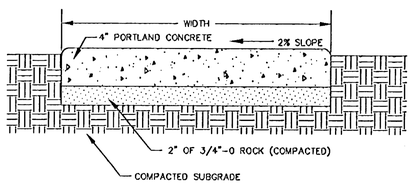

NOTES

1. CONCRETE SHALL BE 3300 PSI AT 28 DAYS, SIX SAC MIX, SLUMP RANGE OF 1 1/2"-3"
2. SIDEWALK PANELS SHALL BE SQUARE, 3/4" DEEP SCRIBES AT JOINTS, EDGED ON 4 SIDES AND HAVE A LIGHT BROOM FINISH.
3. PEDESTRIAN PATH OR BIKEWAY SHALL HAVE A MINIMUM WIDTH OF 5 FEET.

Pedestrian Path or Bikeway

West Linn | DATE: JAN 2000 | DRAWING NO. WL-510 | FILE NO. 00-510

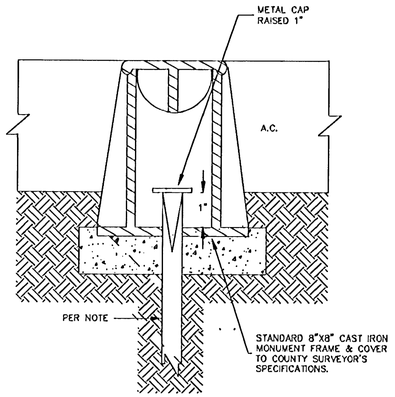

NOTES: ALL MONUMENTS SHALL USE EITHER 5/8" DIA.X 30" LONG IRON ROD OR 3/4" DIA.X 30" LONG IRON PIPE.

ALL MONUMENTS SHALL BE IN ACCORDANCE WITH ORS 209.250(4).

CONCRETE SHALL BE CLASS 3300.

FRAME AND COVER SHALL BE CAST IRON OR ALUMINUM.

COVER SHALL HAVE "MONUMENT" CAST INTO TOP.

Centerline Survey Monuments

West Linn | DATE: JAN 2000 | DRAWING NO. WL-513 | FILE NO. 00-513

LUMINAIRE MOUNTED ON EXISTING POLE

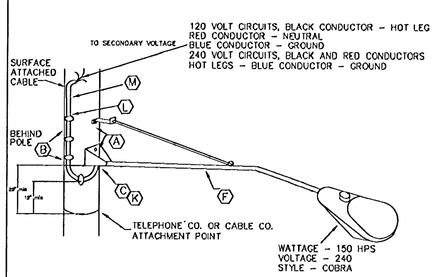

POLE: EXISTING WOOD POLE

MAST ARM INSTALLATION DRAWING
NEW CONSTRUCTION WHERE VOLTAGE IS LIMITED TO 300 VOLTS

ITEM	DESCRIPTION
A	Bolt,Mach.,Galv.,5/8"x12"
B	Washer, Flat 3/16"x2-1/4"
C	Screw, Lag, 1/2"x4-1/2"
F	Arm, Mast, Upswept - 8'
K	Bushing, Insulation 1-1/4"
L	Staples - Flat Head Type
M	Wire,#10 TC 3 Conductor

Mast Arm Detail

West Linn | DATE: JAN 2000 | DRAWING NO. WL-517 | FILE NO. 00-517

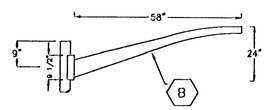

MAST ARM MATERIAL - ALUMINUM

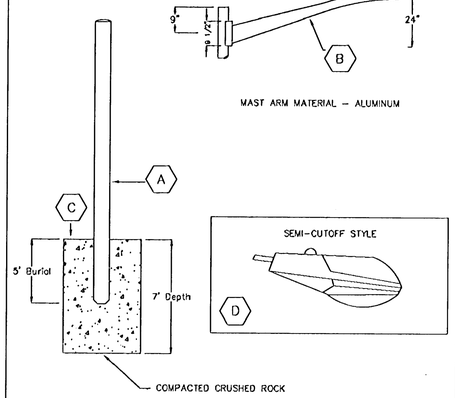

ITEM	DESCRIPTION
A	25' Gray Fiberglass Pole
B	5' Aluminum Mast Arm
C	Compacted Crushed Rock
D	100 W HPS Roadway Lamp (Will Vary Depending on Lighting Requirement)

Standard Street Light

West Linn | DATE: JAN 2000 | DRAWING NO. WL-518 | FILE NO. 00-518

REV.	DESCRIPTION	SUB.	APPR.	DATE

REFER TO TRACING FOR LATEST REVISION

REFERENCE INFORMATION AND NOTES:

DESIGN TCM
DRAFTED TCM
CHECKED JRH
DATE 6/07/06

D.R. HORTON
c/o J.T. SMITH COMPANIES
4388 SW MACADAM AVE., SUITE 102
PORTLAND, OR 97239

HARRIS-McMONAGLE ASSOCIATES, INC.
ENGINEERS - SURVEYORS
12555 S.W. HALL BLVD.
TIGARD, OR 97223-6287
PHONE: (503) 639-3453

PARKER CREST
4300 PARKER ROAD
CITY OF WEST LINN
STANDARD DETAILS (STREET 501-518)

SCALE 1"=40'
DWG. NAME CONST BASE
SHEET 24 OF 25

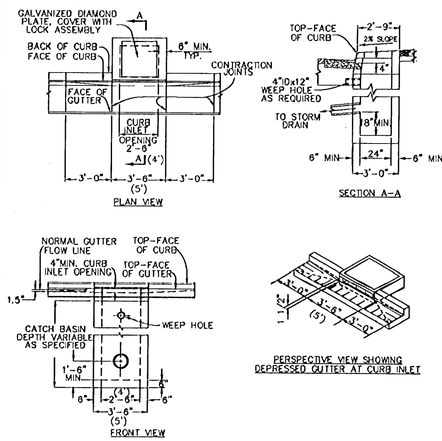

NOTES:
1. ALL FABRICATED METAL PARTS SHALL BE HOT-DIPPED GALVANIZED AFTER FABRICATION.
2. CONCRETE SHALL BE CLASS 3000.
3. CURB INLET BASE MAY BE PRECAST OR CAST-IN-PLACE.
4. FOR SLOPES OF 5% OR GREATER, USE DWG. WL-601.
5. DIMENSIONS IN PARENTHESIS "()" ARE FOR OVERSIZED 4A INLET

Gutter Inlet 2 1/2 A	
West Linn	DATE: JAN 2000
	DRAWING NO. WL-600
	FILE NO. 00-600

MANHOLE RIMS AND COVERS AS MANUFACTURED BY HERN IRON WORKS, COEUR D' ALENE, IDAHO. COVER PATTERN NO. 2312, RIM PATTERN NO. 2311 OR APPROVED EQUAL.

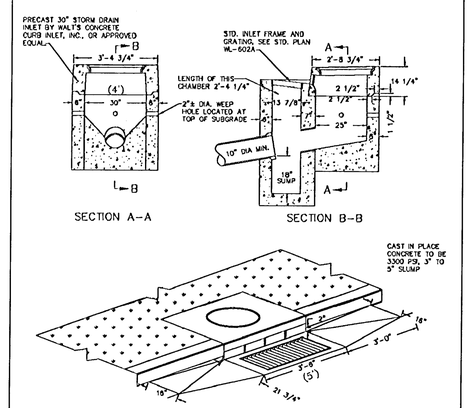

NOTE:
DIMENSIONS IN PARENTHESIS "()" ARE FOR OVERSIZED INLET

Combination Curb Inlet	
West Linn	DATE: JAN 2000
	DRAWING NO. WL-601
	FILE NO. 00-601

NOTES:
1. CONCRETE STRENGTH SHALL BE 3300 PSI.
2. PRECAST BASE WALLS SHALL BE A MINIMUM 4" THICK. CAST-IN-PLACE BASE WALLS SHALL BE 8" THICK.

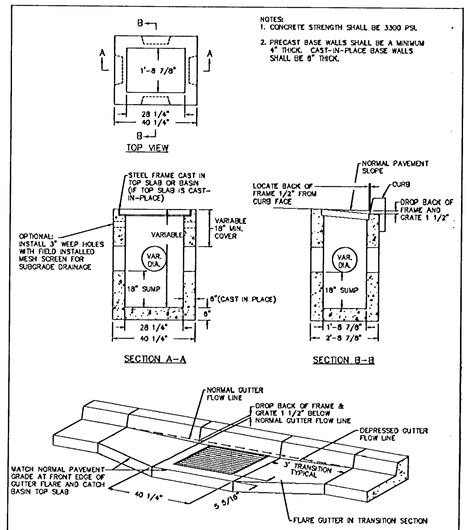

NOTE:
PRECAST TOP SLAB SHOWN WITH GUTTER TRANSITION FLARE. IF THE TOP SLAB IS CAST-IN-PLACE, NO FLARE IS REQUIRED IN THE TRANSITION SECTION. MATCH THE TOP FRONT EDGE OF THE FRAME AND THE TOP FRONT EDGE OF THE CAST-IN-PLACE TOP SLAB TO THE NORMAL PAVEMENT GRADE.

Type G-1 Catch Basin with Sump	
West Linn	DATE: JAN 2000
	DRAWING NO. WL-602
	FILE NO. 00-602

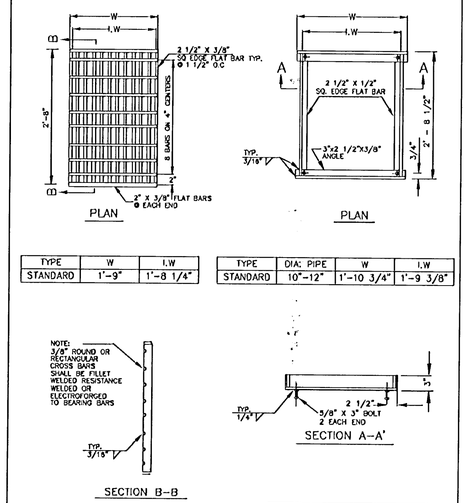

TYPE	W	I.W
STANDARD	1'-9"	1'-8 1/4"

TYPE	DIA. PIPE	W	I.W
STANDARD	10"-12"	1'-10 3/4"	1'-9 3/8"

NOTE:
USE VERTICAL BEADS IN CORNERS. FILLET WELD JOINT ON BOTOM OF FRAME. GRATE MUST REST FLAT ON FRAME SURFACE.

Frame & Grate for Gutter & Curb Inlets	
West Linn	DATE: JAN 2000
	DRAWING NO. WL-602A
	FILE NO. 00-602A

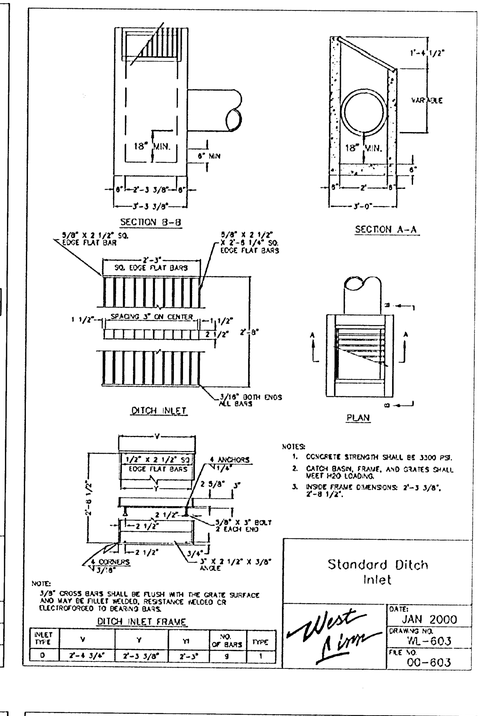

NOTE:
3/8" CROSS BARS SHALL BE FLUSH WITH THE GRATE SURFACE AND MAY BE FILLET WELDED, RESISTANCE WELDED OR ELECTROFORGED TO BEARING BARS.

INLET TYPE	V	Y	Y1	NO. OF BARS	TYPE
D	2'-4 3/4"	2'-3 3/8"	2'-3"	9	1

NOTES:
1. CONCRETE STRENGTH SHALL BE 3300 PSI.
2. CATCH BASIN, FRAME, AND GRATES SHALL MEET H20 LOADING.
3. INSIDE FRAME DIMENSIONS: 2'-3 3/8", 2'-8 1/4".

Standard Ditch Inlet	
West Linn	DATE: JAN 2000
	DRAWING NO. WL-603
	FILE NO. 00-603

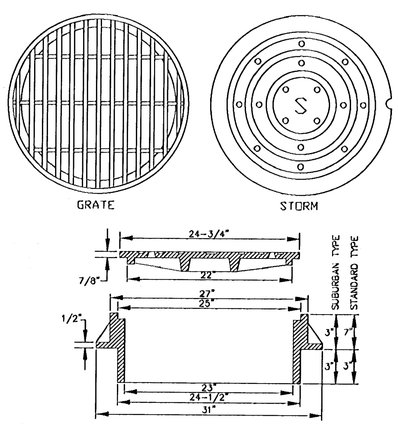

NOTES:
1. USE SUBURBAN TYPE ONLY IN NON-TRAFFIC AREAS, AND ONLY WITH APPROVAL BY THE CITY.
2. COVER AND FRAME SHALL BE GRAY CAST IRON ASTM A-48 CLASS 30.
3. COVER AND FRAME TO BE MACHINED TO A TRUE BEARING ALL AROUND.
4. NOTCH LID FOR LIFTING HOOK.
5. OPEN GRATES REQUIRE APPROVAL BY CITY, AND MUST BE BICYCLE SAFE IF USED IN TRAFFIC AREAS.

SUBURBAN AND STANDARD MANHOLE FRAME AND COVER

Manhole Covers	
West Linn	DATE: JAN 2000
	DRAWING NO. WL-605
	FILE NO. 00-605

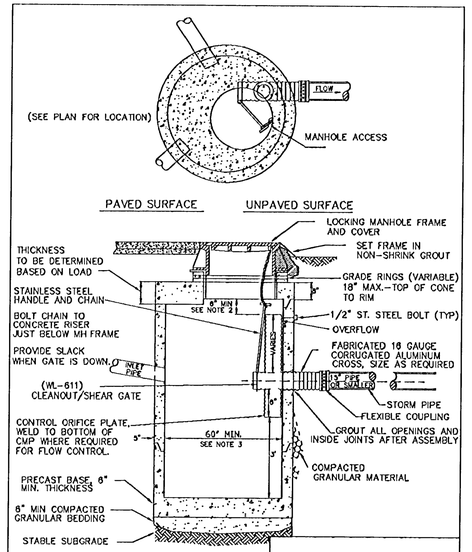

NOTES:
1. ALL PRECAST SECTIONS SHALL CONFORM TO THE REQUIREMENTS OF ASTM C-478.
2. DISTANCE FROM TOP OF OVERFLOW TO MH RIM SHALL BE BASED ON OVERFLOW CAPACITY CALC'S BY DESIGN ENGINEER. ASSUME ORIFICE CONTROL.
3. 72" MINIMUM DIA. MANHOLE REQUIRED FOR OUTLET OR INLET > 21".
4. NO STEPS REQUIRED

Pollution / Flow Control Manhole	
West Linn	DATE: MAY 2005
	DRAWING NO. WL-607
	FILE NO. 00-607

D = PIPE DIAMETER
W = BOTTOM WIDTH OF CHANNEL
P = WETTED PERIMETER OF CHANNEL

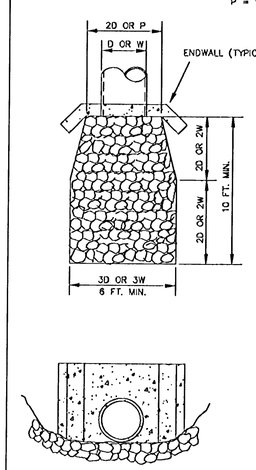

DESIGN VELOCITY FT./SEC	ROCK CLASSIFICATION BY WEIGHT
6 - 10	200 LBS.
10 - 12	1/4 TON
12 - 14	1/2 TON
14 - 16	1 TON
16 - 18	2 TON

SELECTION OF RIP RAP (SEE NOTE 1)

NOTES:
1. DIMENSIONS FOR RIP RAP APPLY TO FLOWS < 2 CFS RIP RAP FOR FLOWS > 2 CFS MUST BE DESIGNED BY AN ENGINEER FLOWS > 20 FPS SHALL USE ENERGY DISSIPATOR
2. TYPE OF RIP RAP
   A. REGULAR QUARRY STONE CLASS 50-200
   B. COBBLESTONE
   C. CONCRETE (ONLY ALLOWED UPON APPROVAL OF THE DISTRICT)
3. PLACEMENT
   A. MINIMUM DEPTH = 1 1/2 TIMES AVERAGE STONE SIZE
   B. ROCKS SHALL BE PLACED TO PROVIDE A MINIMUM OF VOIDS.
   C. SURFACE ROCKS OR CONCRETE SHALL PROTRUDE AT LEAST 1/2 THEIR VERTICAL DIMENSION.
   D. RIP RAP IS TO BE PLACED OVER A NATURAL BEDDING, OR IT MAY BE GROUTED OR PLACED OVER A GRAVEL BEDDING AS REQUIRED BY THE CITY.

Storm Sewer Outfall	
West Linn	DATE: JAN 2000
	DRAWING NO. WL-614
	FILE NO. 00-614

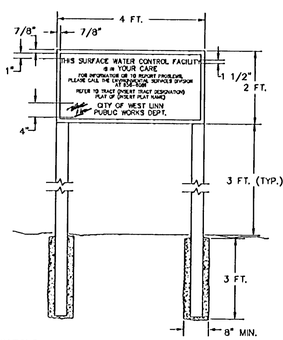

SPECIFICATIONS:
SIZE: 48" BY 24"
MATERIAL: GRADE "B" OR BETTER EXTERIOR PLYWOOD
PAINT: FACE - 3 COATS OUTDOOR ENAMEL (SPRAYED). BACK - 1 COAT OUTDOOR ENAMEL (SPRAYED).
LETTERING: SILK SCREEN ENAMEL WHERE POSSIBLE, OR HAND PAINTED ENAMELS.
COLORS: BLACK AND WHITE. WHITE BACKGROUND, LETTERING AND BORDER IN BLACK
TYPE FACE: HELVETICA, 1 1/2" TALL WITH 7/8" SPACING BETWEEN LETTERS AND OUTER BORDER. OUTER BORDER 1/2" WIDTH
INSTALLATION: SECURED TO CHAIN LINK FENCE IF AVAILABLE. OTHERWISE INSTALL ON TWO 8 FT. LONG 4" X 4" POSTS, PRESSURE TREATED, INSTALLED IN 3 FT. DEEP CONCRETE FILLED POST HOLES (8" MIN. DIA.)

Surface Water Facility Sign	
West Linn	DATE: JAN 2000
	DRAWING NO. WL-615
	FILE NO. 00-615

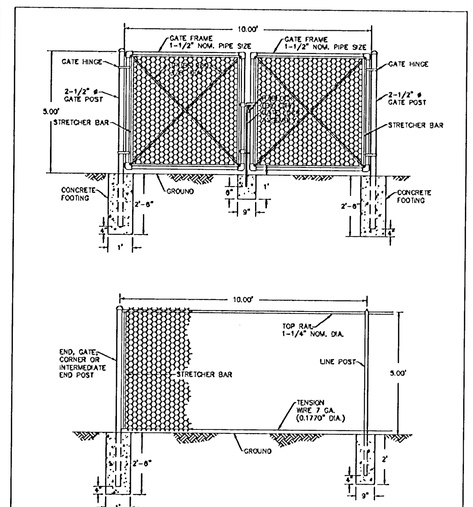

NOTES:
1. BLACK POWDER COATING ON ALL HARDWARE AND ACCESSORIES IS REQUIRED.
2. ALL MATERIAL AND WORKMANSHIP SHALL BE IN ACCORDANCE WITH THE CURRENT STATE OF OREGON STANDARD SPECIFICATIONS FOR HIGHWAY CONSTRUCTION.

Surface Water Facility Fence	
West Linn	DATE: JAN 2000
	DRAWING NO. WL-616
	FILE NO. 00-616

REV.	DESCRIPTION	SUB.	APPR.	DATE
1	ADDED DIMENSIONS FOR OVERSIZED INLETS	TCM	JRH	7/31/06

REFER TO TRACING FOR LATEST REVISION

REFERENCE INFORMATION AND NOTES:

DESIGN	TCM
DRAFTED	TCM
CHECKED	JRH
DATE	6/07/06

D.R. HORTON
c/o J.T. SMITH COMPANIES
4388 SW MACADAM AVE., SUITE 102
PORTLAND, OR 97239

HARRIS-McMONAGLE ASSOCIATES, INC.
ENGINEERS - SURVEYORS
12555 S.W. HALL BLVD.
TIGARD, OR 97223-6287
PHONE: (503) 639-3453

PARKER CREST
4300 PARKER ROAD
CITY OF WEST LINN
STANDARD DETAILS (STORM 600-616)

SCALE 1"=40'
DWG. NAME CONST BASE
SHEET 25 OF 25

POND PLANT LIST:

#	SYM	LATIN NAME/ Common Name	SIZE	SPACING
		TREES		
52	AC	ACER CIRCINATUM Vine Maple (Min. 4 Stem)	5' min ht.	As shown
5	AM	ACER MACROPHYLLUM Bigleaf Maple	1 1/2" cal.	As shown
6	AR	ALNUS RUBRA Red Alder	1 1/2" cal.	As shown
7	CN	CORNUS NUTTALLII Pacific Dogwood	1 1/2" cal.	As shown
6	FL	FRAXINUS LATIFOLIA Oregon Ash	1 1/2" cal.	As shown
5	TP	THUJA PLICATA Western Red Cedar	1 1/2" cal.	As shown
		SHRUBS		
41	CS	CORNUS SERICEA Redosier Dogwood	2 gal.	6' o.c.
23	HD	HOLODISCUS DISCOLOR Ocean Spray	2 gal.	6' o.c.
25	MA	MAHONIA AQUIFOLIUM Oregon Grape	2 gal.	5' o.c.
24	PC	PHYSOCARPUS CAPITATUS Western Ninebark	2 gal.	6' o.c.
28	RN	ROSA NUTKANA Nootka Rose	2 gal.	5' o.c.
44	RP	ROSA PISOCARPA Swamp Rose	2 gal.	5' o.c.
32	RS	RIBES SANGUINEUM Red Flowering Currant	2 gal.	6' o.c.
30	SA	SYMPHORICARPOS ALBA Snowberry	2 gal.	5' o.c.
75	SD	SPIRAEA DOUGLASII Douglas Spiraea	2 gal.	5' o.c.
		HERBACEOUS SPECIES (SWALE BOTTOM)		
1,050	CO	CAREX OBNUPTA Slough Sedge	Plugs	6 / 1 SF
1,050	JP	JUNCUS PATENS Spreading Rush	Plugs	6 / 1 SF
1,050	SM	SCIRPUS MICROCARPUS Small-fruited Bulrush	Plugs	6 / 1 SF

SWALE BOTTOM = 525 SF
525 (6) = 3,150 PLUGS (MIX SPECIES)
SEED ENTIRE POND AREA EXCEPT FOR SWALE BOTTOM:
POND AREA = 10,456 / 200 = 52 LBS OF SEED

SWALE BOTTOM & SIDE SLOPE STD. PLANTING DETAIL

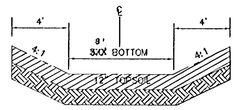

POND SWALE – TYPICAL SECTION
NOT TO SCALE

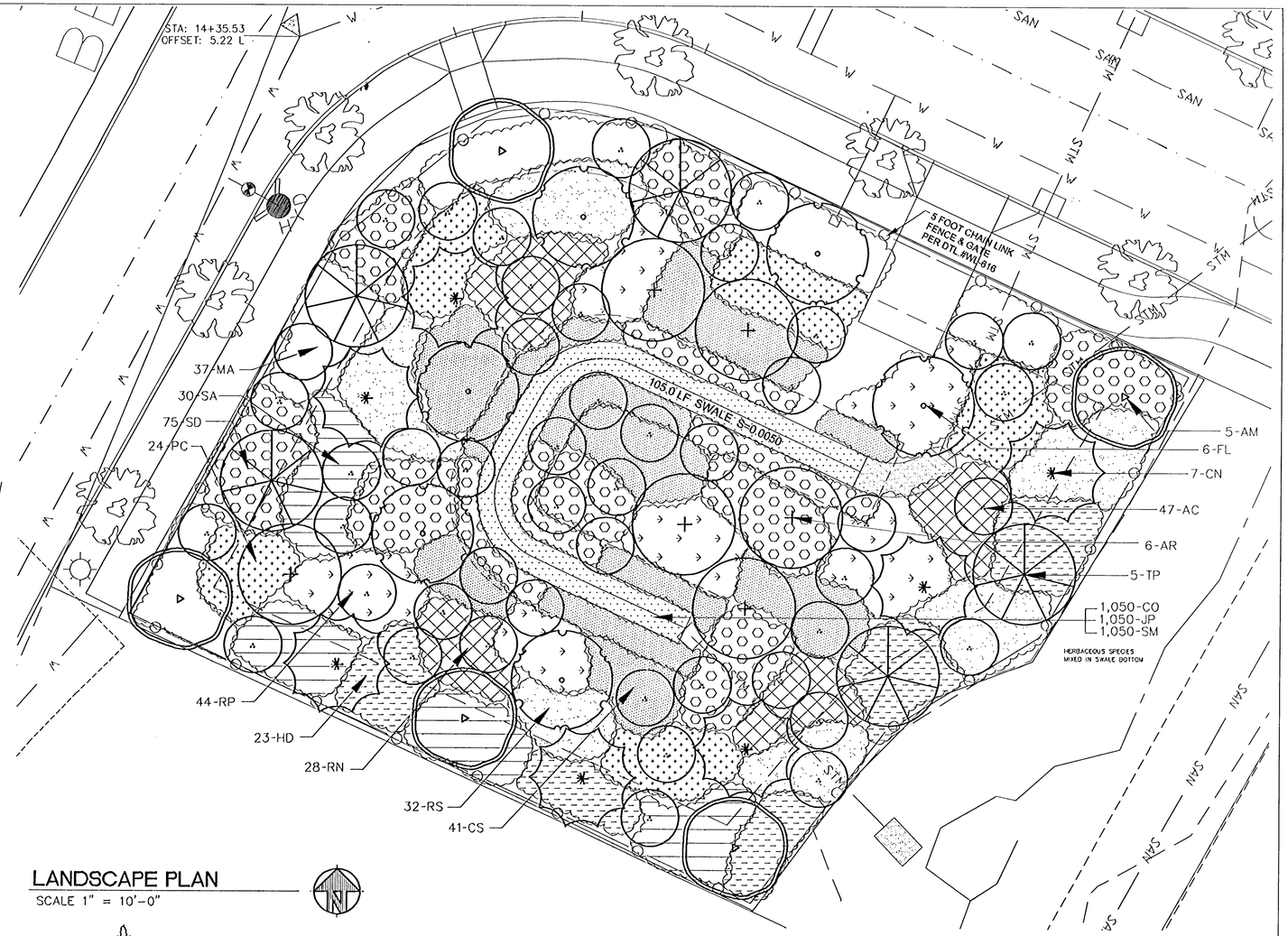

LANDSCAPE PLAN

SCALE 1" = 10'-0"

POND OUTLET CONTROL:
PROVIDE 12" VERTICAL STAND PIPE, SECURE TO OUFALL SIDE OF OVERFLOW INLET WITH STAINLESS STEEL STRAPS. TEE INTO 12" PIPE OUT. PROVIDE FOLLOWING ORIFICES:
4.3" – I.E. 477.00
8.0" – I.E. 480.50
TOP OF PIPE (OPEN) – 481.40

PLANTING NOTE:
MAT ALL EXPOSED SOILS UNTIL READY TO VEGETATE FACILITIES. PLANT ALL VEGETATION AND PROTECT UNTIL VEGETATION IS WELL ESTABLISHED OR FACILITY MAINTENANCE BOND IS RELEASED. DO NOT DIVERT FLOWS INTENDED FOR THE FACILITY BY DESIGN.

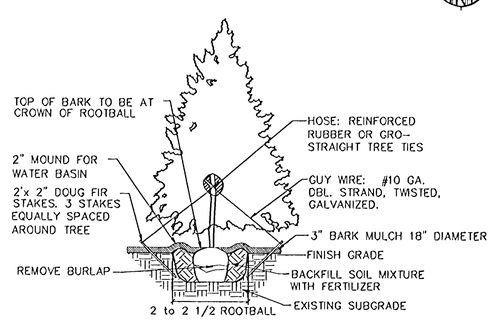

EVERGREEN TREE STAKING DETAIL
NOT TO SCALE

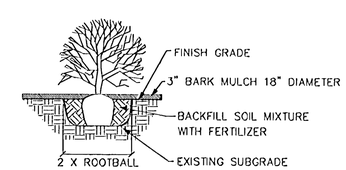

SHRUB PLANTING DETAIL
NOT TO SCALE

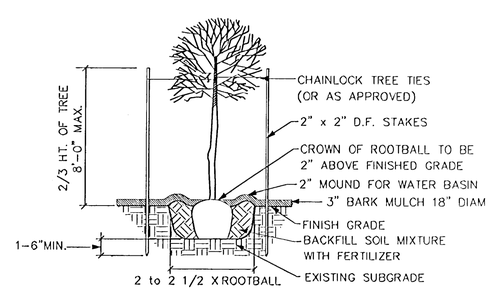

DECIDUOUS TREE PLANTING DETAIL
NOT TO SCALE

OTTEN LANDSCAPE ARCHITECTS Inc.
3933 SW Kelly Avenue • Suite B • Portland, Oregon 97239-4393
Phone (503) 972-0311 • Fax (503) 972-0314 • www.ottenla.com

REV.	DESCRIPTION	SUB.	APPR.	DATE

REFER TO TRACING FOR LATEST REVISION

REFERENCE INFORMATION AND NOTES:

REGISTERED PROFESSIONAL LANDSCAPE ARCHITECT OREGON

DESIGN	TCM
DRAFTED	TCM
CHECKED	JRH
DATE	6/07/08

D.R. HORTON
c/o J.T. SMITH COMPANIES
4386 SW MACADAM AVE., SUITE 102
PORTLAND, OR 97239

HARRIS-McMONAGLE ASSOCIATES, INC.
ENGINEERS – SURVEYORS
12555 S.W. HALL BLVD.
TIGARD, OR 97223-6287
PHONE: (503) 639-3453

PARKER CREST
4300 PARKER ROAD
WATER QUALITY SWALE AND DETENTION POND PLAN

SCALE 1"=10'
DWG. NAME 14.POND
SHEET L1
OF

OUTLINE SPECIFICATIONS PLANTING AND SEEDING

GENERAL: All plants shall conform to all applicable standards of the latest edition of the "American Association of Nurserymen Standards", A.N.S.I. Z60.1 – 1973. Meet or exceed the regulations and laws of Federal, State, and County regulations, regarding the inspection of plant materials, certified as free from hazardous insects, disease, and noxious weeds, and certified fit for sale in Oregon.

The apparent silence of the Specifications and Plans as to any detail, or the apparent omission from them of a detailed description concerning any point, shall be regarded as meaning that only the best general practice is to prevail and that only material and workmanship of first quality are to be used. All interpretations of these Specifications shall be made upon the basis above stated.

PERFORMANCE QUALITY ASSURANCE: Use adequate numbers of skilled workmen who are thoroughly trained and experienced in the necessary horticultural practices and who are completely familiar with the specified requirements and methods needed for the proper performance of the work of this section.

NOTIFICATION: Give Landscape Architect minimum of 2 days advance notice of times for inspections. Inspections at growing site does not preclude Landscape Architect's right of rejection of deficient materials at project site. Each plant failing to meet the above mentioned "Standards" or otherwise failing to meet the specified requirements as set forth shall be rejected and removed immediately from the premises by the Contractor and at his expense, and replaced with satisfactory plants or trees conforming to the specified requirements.

SUBSTITUTIONS: Only as approved by the Landscape Architect or the Owner's Representative.

GUARANTEE AND REPLACEMENT: All plant material shall be guaranteed from final acceptance for one full growing season or one year, whichever is longer. During this period the Contractor shall replace any plant material that is not in good condition and producing new growth (except that material damaged by severe weather conditions, due to Owner's negligence, normally unforeseen peculiarities of the planting site, or lost due to vandalism). Guarantee to replace, at no cost to Owner, unacceptable plant materials with plants of same variety, age, size and quality as plant originally specified. Conditions of guarantee on replacement plant shall be same as for original plant.

Landscape Contractor shall keep on site for Owner's Representative's inspection, all receipts for soil amendment and topsoil deliveries.

PROTECTION: Protect existing roads, sidewalks, and curbs, landscaping, and other features remaining as final work. Verify location of underground utilities prior to doing work. Repair and make good any damage to service lines, existing features, etc. caused by landscaping installation.

PLANT QUALITY ASSURANCE: Deliver direct from nursery. Maintain and protect roots of plant material from drying or other possible injury. Store plants in shade and protect them from weather immediately upon delivery, if not to be planted within four hours.

Nursery stock shall be healthy, well branched and rooted, formed true to variety and species, full foliaged, free of disease, injury, defects, insects, weeds, and weed roots. Trees shall have straight trunks, symmetrical tips, and have an intact single leader. All Plants: True to name, with one of each bundle or lot tagged with the common and botanical name and size of the plants in accordance with standards of practice of the American Association of Nurserymen, and shall conform to the Standardized Plant Names, 1942 Edition.

Container grown stock: Small container–grown plants, furnished in removable containers, shall be well rooted to ensure healthy growth. Grow container plants in containers a minimum of one year prior to delivery, with roots filling container but not root bound. Bare root stock: Roots well–branched and fibrous. Balled and burlapped (B&B): Ball shall be of natural size to ensure healthy growth. Ball shall be firm and the burlap sound. No loose or made ball will be acceptable.

TOPSOIL AND FINAL GRADES: Landscape Contractor is to verify that the topsoil is or is not conducive to proper plant growth.

Landscape Contractor is to supply and place 12" of topsoil in planting beds and 6" in lawn areas. If topsoil stockpiled on site is not conducive to proper plant growth, the Landscape Contractor shall import the required amount. Landscape Contractor is to submit samples of the imported soil and/or soil amendments to the Landscape Architect. The topsoil shall be a sandy loam, free of all weeds and debris inimical to lawn or plant growth.

Landscaping shall include finished grades and even distribution of topsoil to meet planting requirements. Grades and slopes shall be as indicated. Finish grading shall remove all depressions or low areas to provide positive drainage throughout the area.

HERBICIDES: Removal of invasive non–native species is required by hand for the entire area. If necessary, excessive weed growth may be treated with Rodeo or Garlon 3–A (or approved equals) in strict accordance with the manufacturer's instructions.

SOIL PREPARATION: Work all areas by rototilling to a minimum depth of 8 inches. Remove all stones (over 1 1/2" size), sticks, mortar, large clumps of vegetation, roots, debris, or extraneous matter turned up in working. Soil shall be of a homogeneous fine texture. Level, smooth and lightly compact area to plus or minus .10 of required grades.

GENERAL NOTES:

1. Contractor is to verify all plant quantities.
2. Adjust plantings in the field as necessary.
4. All plants are to be fully foliaged, well branched and true to form.

IRRIGATION NOTE:
OWNER/DEVELOPER SHALL INSTALL AN UNDERGROUND IRRIGATION SYSTEM IN CONFORMANCE WITH THE CITY OF WEST LINN AND UPC STANDARDS. CONTRACTOR SHALL COORDINATE THE INSTALLATION WITH THE OWNER. THE IRRIGATION SYSTEM SHALL INCLUDE A METER, BACKFLOW PREVENTER AND BATTERY POWERED TIMER.

PLANTING HOLE: Lay out all plant locations and excavate all soils from planting holes to 2 1/2 times the root ball or root system width. Loosen soil inside bottom of plant hole. Dispose of any "subsoil" or debris from excavation. Check drainage of planting hole with water, and adjust any area showing drainage problems.

SOIL MIX: Prepare soil mix in each planting hole by mixing:
2 part native topsoil (no subsoil)
1 part compost (as approved)

Thoroughly mix in planting hole and add fertilizers at the following rates:
Small shrubs – 1/8 lb./ plant
Shrubs – 1/3 to 1/2 lb./ plant
Trees – 1/3 to 1 lb./ plant

FERTILIZER: Do not apply fertilizer to any plantings within the Pond or Water Quality Swale.

PLANTING TREES AND SHRUBS: Plant upright and face to give best appearance or relationship to adjacent plants and structures. Place 6" minimum, lightly compacted layer of prepared planting soil under root system. Loosen and remove twine binding and burlap from top one–half of root balls. Cut off cleanly all broken or frayed roots, and spread roots out. Stagger Plants in rows. Backfill planting hole with soil mix while working each layer to eliminate voids.

When approximately 2/3 full, water thoroughly, then allow water to soak away. Place remaining backfill and dish surface around plant to hold water. Final grade should keep root ball slightly above surrounding grade, not to exceed 1 inch. Water again until no more water is absorbed. Initial watering by irrigation system is not allowed.

STAKING OF TREES: Stake or guy all trees. Stakes shall be 2" X 2" (nom.) quality tree stakes with point. They shall be of Douglas Fir, clear and sturdy. Stake to be minimum 2/3 the height of the tree, not to exceed 8'–0". Drive stake firmly 1'–6" below the planting hole. Tree ties for deciduous trees shall be "Chainlock" (or better). For Evergreen trees use "Gro–Strait" Tree Ties (or a reinforced rubber hose and guy wires) with guy wires of a minimum 2 strand twisted 12 ga. wire.

MULCHING OF PLANTINGS: Trees, shrubs, and groundcovers planted shall be mulched a minimum of three inches in depth and 18 inches in diameter. Mulch should be made from composted bark or leaves that have not been chemically treated. The use of mulch in frequently inundated areas shall be limited to avoid any possible water quality impacts, including the leaching of tannins and nutrients and the migration of mulch into waterways. Water thoroughly, then hose down planting area with fine spray to wash leaves of plants.

WATER QUALITY SWALE AND POND SEED: After areas have been prepared as described under soil preparation, float or drag water quality areas to required grades. Establish an even, fine textured seed bed meeting grades, surfaces and texture. Sow seed, (over all areas except swale bottom, and after all plant material is in ground) with a mechanical spreader at the uniform rates as noted below. Rake seed lightly to provide cover.

SEED: Bluetag grass seed conforming to applicable State laws. No noxious weed seeds. Submit Guaranteed analysis. GRASS SEED SHALL BE A LOW GROWTH COMPANION TYPE MIX.
Seed Mix: To contain 20% Creeping Red Fescue, 70% Perennial Ryegrass, and 10% Highland Colonial Bentgrass (Hobbs and Hopkins Pro–Time 825 Dwarf Biofilter Mix, or approved equal). Seed must be crop and weed free. Seed at 5 lbs. / 1,000 sq. ft.

MAINTENANCE OF SEEDED AREAS:

Water Quality Swale and Pond areas: Areas shall be maintained by watering, reseeding, and weeding for a minimum 60 days after seeding. Water quality swale is to be kept free of debris and maintained to insure water flow at all times.

GENERAL MAINTENANCE: Protect and maintain work described in these specifications against all defects of materials and workmanship, through final acceptance. Replace plants not in normal healthy condition at the end of this period. Water, weed, cultivate, mulch, reset plants to proper grade or upright position, remove dead wood and do necessary standard maintenance operations. Irrigate when necessary to avoid drying out of plant materials, and to promote healthy growth.

CLEAN–UP: At completion of each division of work all extra material, supplies, equipment, etc., shall be removed from the site. All walks, paving, or other surfaces shall be swept clean, mulch areas shall have debris removed and any soil cleared from surface. All areas of the project shall be kept clean, orderly and complete.

WATER QUALITY SWALE MAINTENANCE SCHEDULE

THE CONTRACTOR SHALL BE RESPONSIBLE FOR SUPPLYING AND MAINTAINING THE NECESSARY IRRIGATION TO ENSURE PROPER ESTABLISHMENT OF THE GRASS, PLUGS, SHRUBS AND TREES.

THE OWNER WILL MAINTAIN THE FACILITY AFTER THE ONSITE CONSTRUCTION IS COMPLETE AND THE VEGETATION IS ESTABLISHED, UNTIL THE END OF THE TWO YEAR MAINT. PERIOD OR RELEASE OF MAINTENANCE BOND ON THE FACILITY WHICH EVER IS LONGER, IN ACCORDANCE WITH THE CITY OF WEST LINN CODE.

THIS INCLUDES, BUT IS NOT LIMITED TO THE FOLLOWING:

A. REMOVAL AND DISPOSAL OF ACCUMULATED SEDIMENT FROM SWALE BOTTOM, (APPROXIMATELY EVERY YEAR AFTER LANDSCAPE AREAS ARE ESTABLISHED). RAKE THE DEPOSITED SEDIMENT TO GRADE AFTER EACH STORM EVENT. RE–SEED AND VEGETATE AS NEEDED.
B. REMOVAL AND DISPOSAL OF ACCUMULATED SEDIMENT FROM STORM INLETS AS NEEDED, (APPROXIMATELY TWICE A YEAR).
C. WATER GRASS, TREES AND SHRUBS, AS NEEDED DURING DRY PERIODS TO MAINTAIN VIGOROUS GROWTH.
D. REMOVE LITTER AND DEBRIS FROM SWALE AREA ON A REGULAR BASIS.
E. REPAIR AND CHANNELS OR RIVULETS THAT FORM IN THE SWALE BOTTOM OR SIDES & REPLANT AS NEEDED.
F. ALL PLANTS SHALL HAVE AN 80% SURVIVAL RATE.
G. IRRIGATION IS TO BE PROVIDED BY SPRINKLER, INTERVAL AND VOLUME OF WATER TO BE ADJUSTED BASED ON PLANTINGS NEEDS. BATTERY FOR TIMER SHALL BE CHECKED AND REPLACED IF NECESSARY AT LEAST TWICE PER YEAR.

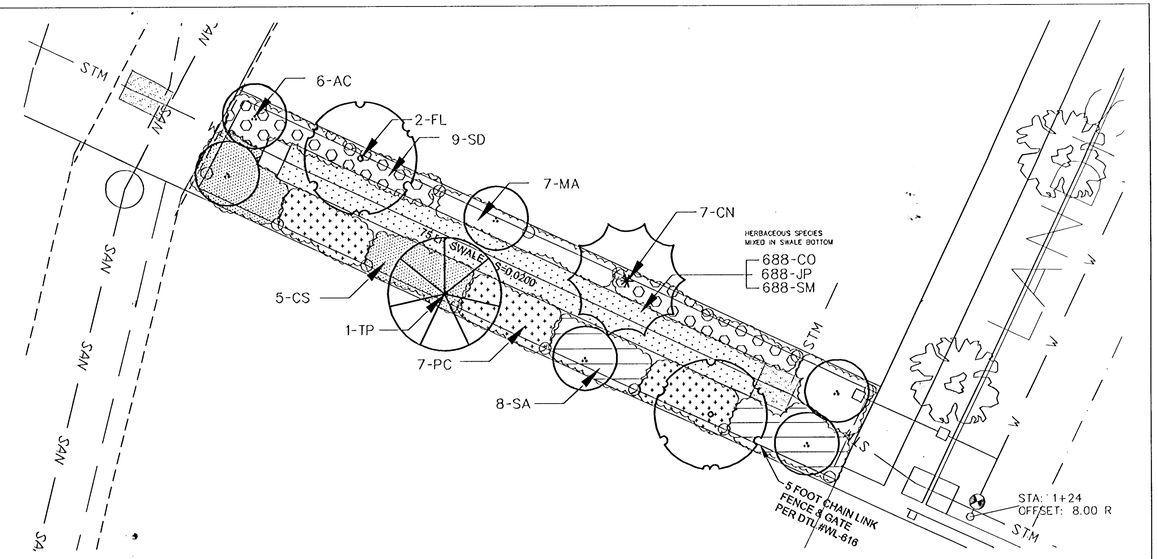

LANDSCAPE PLAN

SCALE 1" = 10'–0"

WATER QUALITY SWALE PLANT LIST:

#	SYM	LATIN NAME/ Common Name	SIZE	SPACING
		TREES		
6	AC	ACER CIRCINATUM Vine Maple (Min. 4 Stem)	5 gal	As shown
1	CN	CORNUS NUTTALLII Pacific Dogwood	1 1/2" cal.	As shown
2	FL	FRAXINUS LATIFOLIA Oregon Ash	1 1/2" cal.	As shown
1	TP	THUJA PLICATA Western Red Cedar	1 1/2" cal.	As shown
		SHRUBS		
5	CS	CORNUS SERICEA Redosier Dogwood	2 gal.	6' o.c.
7	PC	PHYSOCARPUS CAPITATUS Western Ninebark	2 gal.	6' o.c.
7	MA	MAHONIA AQUIFOLIUM Oregon Grape	2 gal.	5' o.c.
8	SA	SYMPHORICARPOS ALBA Snowberry	2 gal.	5' o.c.
9	SD	SPIRAEA DOUGLASII Douglas Spiraea	2 gal.	5' o.c.
		HERBACEOUS SPECIES (SWALE BOTTOM)		
688	CO	CAREX OBNUPTA Slough Sedge	Plugs	6 / SF
688	JP	JUNCUS PATENS Spreading Rush	Plugs	6 / SF
688	SM	SCIRPUS MICROCARPUS Small–fruited Bulrush	Plugs	6 / SF

SWALE BOTTOM = 344 SF
344 (6) = 2,064 PLUGS (MIX SPECIES)

SEED: 856 SF (SWALE AREA MINUS BOTTOM)
856 SF / 200 = 4.3 LBS

SWALE BOTTOM & SIDE SLOPE STD. PLANTING DETAIL

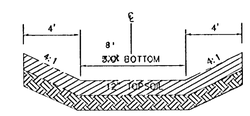

TRACT B SWALE – TYPICAL SECTION
NO SCALE

OTTEN LANDSCAPE ARCHITECTS Inc.
3933 SW Kelly Avenue • Suite B • Portland, Oregon 97239-4393
Phone (503) 972-0311 • Fax (503) 972-0314 • www.ottenla.com

REV.	DESCRIPTION	SUB.	APPR.	DATE
1	REVISED PER CITY COMMENTS	TCM	JRH	9/20/06

REFER TO TRACING FOR LATEST REVISION

REFERENCE INFORMATION AND NOTES:

DESIGN TCM
DRAFTED TCM
CHECKED JRH
DATE 6/07/06

c/o J.T. SMITH COMPANIES
4388 SW MACADAM AVE., SUITE 102
PORTLAND, OR 97239

HARRIS–McMONAGLE ASSOCIATES, INC.
ENGINEERS – SURVEYORS
12555 S.W. HALL BLVD.
TIGARD, OR 97223–6287
PHONE: (503) 639–3453

PARKER CREST
4300 PARKER ROAD
WATER QUALITY SWALE PLAN

SCALE 1"=10'
DWG. NAME 14.POND
SHEET L2
OF

NUMERIC SUMMARY							
PROJECT: PARKER CREST							
LABEL	CALC TYPE	UNITS	AVG	MAX	MIN	AVG/MIN	MAX/MIN
INTERIOR STREETS	ILLUMINANCE	Fc	0.43	2.3	0.1	4.30	23.00
PARKER ROAD	ILLUMINANCE	Fc	0.60	3.3	0.2	3.00	16.50

LIGHT LEVEL REQUIREMENTS				
ROADWAY	CLASSIFICATION		LIGHT LEVEL	UNIFORMITY
PARKER ROAD	COLLECTOR	TARGET	0.9 FC AVG	4:1 AVG/MIN
		ACHIEVED	0.90 FC	3.91:1
INTERIOR STREETS	LOCAL	TARGET	0.4 FC AVG	6:1 AVG/MIN
		ACHIEVED	0.43 FC	4.30:1

AS BUILT
A/B DENOTES
"AS BUILT" DIMENSIONS

GRAPHIC SCALE
40 0 20 40 80 160
(IN FEET)
1 inch = 40 ft.

STREETLIGHTING
Scale: AS NOTED

FIXTURE SCHEDULE						
PROJECT: PARKER CREST						
LABEL	DESCRIPTION	WATTS	LUMENS	ARM	ARRANGEMENT	LLF
LP1-EXISTING STREETLIGHT	HPS, 'SHOEBOX' STYLE LUMINAIRE MOUNTED ON A 25' BRONZE FIBERGLASS POLE	100	9500	1	SINGLE	0.690
LP3-PROPOSED STREETLIGHT	HPS, 'SHOEBOX' STYLE LUMINAIRE MOUNTED ON A 25' BRONZE FIBERGLASS POLE	100	9500	1	SINGLE	0.690
LP4-PROPOSED STREETLIGHT	HPS, 'COBRA' STYLE, FLAT LENS LUMINAIRE MOUNTED 30' ON AN EXISTING PGE POWER POLE	150	16000	6	SINGLE	0.690
LP5-PROPOSED STREETLIGHT	HPS, 'COBRA' STYLE, FLAT LENS LUMINAIRE MOUNTED ON A 30' GRAY FIBERGLASS POLE	150	16000	6	SINGLE	0.690
LP6-EXISTING STREETLIGHT	HPS, 'COBRA' STYLE, FLAT LENS LUMINAIRE MOUNTED ON A 25' GRAY FIBERGLASS POLE	100	9500	6	SINGLE	0.690
LP7-FUTURE STREETLIGHT	HPS, 'COBRA' STYLE, FLAT LENS LUMINAIRE MOUNTED ON A 30' GRAY FIBERGLASS POLE	150	16000	6	SINGLE	0.690

Northstar Electrical Contractors
19450 S.W. Cipole Road, Suite 107
Tualatin, Oregon 97062-7111
Phone 503-612-0840
Fax 503-612-0891
Email ltgdesign@NorthStarElect.com

PARKER CREST
REDESIGN
WEST LINN, OR

REV DATE	NO.	REV DESCRIPTION
3/5/07	2	REVISED COLLECTOR PHOTOMETRICS
2/19/07	1	REVISED FOR EXISTING LIGHTS
10/10/06	0	ISSUE FOR APPROVAL

Title: STREETLIGHTING
Designed by: Douglas B. Sedivy
Checked by: Ken Murphy
Date: MAR. 6, 2007

DWG. NO
EL1