XREF LIST
Ltscale: 60
Resolved
C165X001
C165X190
C165X010
C165X230
--Images--
P 1
P 2
vicinitymap
P 31

ARBOR COVE
SITE IMPROVEMENT PLANS
WEST LINN, OREGON

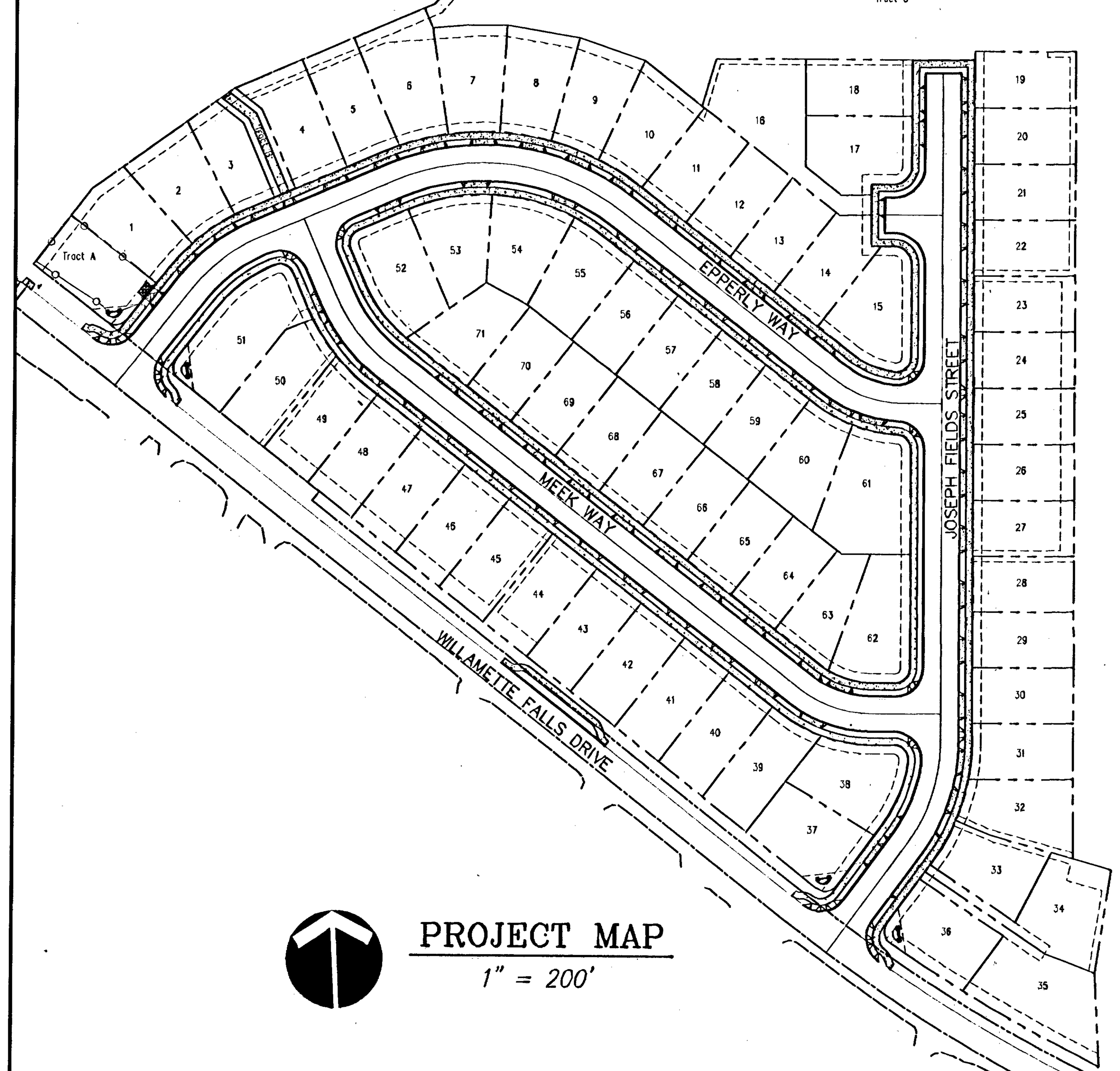

PROJECT MAP
1" = 200'

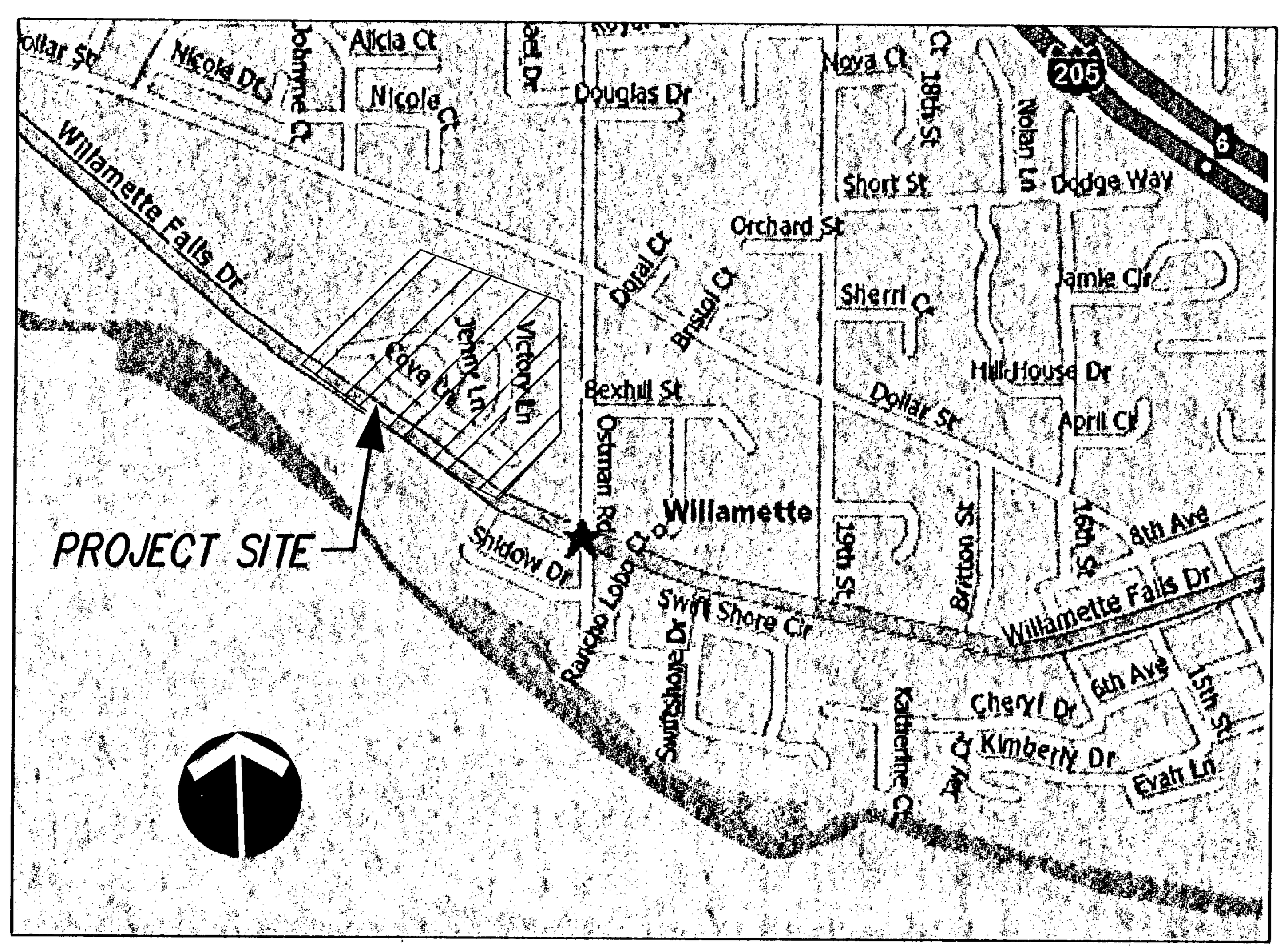

VICINITY MAP
N.T.S.

CALL BEFORE YOU DIG
1-800-424-5555

ATTENTION EXCAVATORS: Oregon law requires you to follow rules adopted by the Oregon Utility Notification Center. Those rules are set forth in OAR 952-001-0010 through OAR 952-001-0090. You may obtain copies of these rules from the Center by calling (503) 232-1987. If you have any questions about the rules, you may contact the call Center. YOU MUST NOTIFY THE CENTER AT LEAST 2 BUSINESS DAYS, BUT NOT MORE THAN 10 BUSINESS DAYS, BEFORE COMMENCING AN EXCAVATION. CALL (503) 246-6699.

LKO: SARAHN 02/29/2008 10:32am --> L:\PROJECT\14100\14165\DWG\C165C000.DWG

APPLICANT

NAME:	WEST HILLS DEVELOPMENT 735 SW 158TH AVE. BEAVERTON, OR 97006
CONTACT:	DAN GRIMBERG
PHONE:	(503) 641-7342
FAX:	(503) 641-7661

CIVIL ENGINEER/SURVEYOR/PLANNER

NAME:	OTAK, INC. 17355 SW BOONES FERRY RD. LAKE OSWEGO, OR 97035
PLANNER:	JERRY OFFER
ENGINEER:	MIKE PEEBLES, PE
SURVEYOR:	ROB GRAHAM
PHONE:	(503) 635-3618
FAX:	(503) 635-5395

*TOPOGRAPHIC MAP PREPARED BY COMPASS ENGINEERING

GEOTECHNICAL ENGINEER

NAME:	GEOPACIFIC ENGINEERING 7312 SW DURHAM RD. PORTLAND, OR 97224
CONTACT:	SCOTT L. HARDMAN, PE
PHONE:	(503) 598-8445
FAX:	(503) 598 8705

GOVERNING JURISDICTION

NAME:	CITY OF WEST LINN 22500 SALAMO RD. WEST LINN, OR 97068
CONTACT:	DENNIS WRIGHT
PHONE:	(503) 722-5514
FAX:	(503) 656-4106

PROPOSED SITE

SITE SIZE:	14.36 ACRES
ZONING:	R4.5
PROPOSED USE: OF PROPERTY	SUBDIVISION FOR 71 SINGLE FAMILY RESIDENTIAL UNITS
LEGAL DESCRIPTION:	CLACKAMAS COUNTY ASSESSORS MAP T2S RIE SECTION 34 DC T.L. 1000

BENCH MARK

3" BRASS DISC "OSHD Z 450 1953"
1.25 MILES NORTHWEST OF WILLAMETTE ON TUALATIN, APPROX. 100' WEST OF EAST END OF FIELDS BRIDGE OVER TUALATIN RIVER, ON SOUTH SIDEWALK. ELEV = 116.581 FT

LOCATING EXISTING UTILITIES

--- 48 HOUR NOTICE REQUIRED PRIOR TO EXCAVATION ---

ONE CALL SYSTEM (GENERAL TELEPHONE, NORTHWEST NATURAL GAS, U.S. WEST, U.S. SPRINT)	(503) 246-6699 (503) 643-5454
PORTLAND GENERAL ELECTRIC	EXT. 312, 313, 314 243-7491
TCI CABLE TELEVISION	

REPAIR EMERGENCIES

NORTHWEST NATURAL GAS	(503) 226-4211, EXT. 4413
CITY OF WEST LINN WATER OPERATIONS SANITARY SEWER OPERATIONS	(503) 656-3535

THE CONTRACTOR, IN LOCATING AND PROTECTING UNDERGROUND UTILITIES, MUST COMPLY WITH THE REGULATIONS OF O.R.S. 757.541 TO 757.571

These As Built Plans were compiled from changes to permitted plans as denoted by contractor and periodic observation during construction. It is suggested that these plans be used in conjunction with field verification of location and elevations of improvements in question. These plans are an accurate record of site improvements to the best of my information, knowledge and belief.

Signature ____ Date 6/3/08

SHEET INDEX

C0.0	COVER SHEET
C0.1	GENERAL NOTES
SITE DEVELOPMENT PLAN	
C1.0	EXISITING CONDITIONS AND DEMOLITION PLAN
C1.1	SITE PLAN AND TYPICAL STREET SECTION
C1.2	COMPOSITE UTILITY PLAN
C1.3	TREE PRESERVATION PLAN
GRADING PLAN	
C2.0	OVERALL SITE
C2.1	NORTH
C2.2	SOUTH
C2.3	SITE CROSS SECTIONS AND RETAINING WALL DETAILS
STREET AND STORM DRAIN PLAN & PROFILE	
C3.0C	COMPOSITE UTILITY PLAN
C3.0	JOSEPH FIELDS STREET: STA 1+00 TO END
C3.1	MEEK WAY: STA 1+00 TO 8+50.82
C3.2	EPPERLY WAY: STA 1+00 TO 9+74.97
C3.3	WILLAMETTE FALLS DRIVE: STA 2+60 TO 12+60
C3.4	WATER QUALITY SWALE: PLAN AND PROFILE
SANITARY SEWER AND WATER PLAN & PROFILE	
C4.0C	COMPOSITE UTILITY PLAN
C4.0	JOSEPH FIELDS STREET: STA 1+00 TO END
C4.1	MEEK WAY: STA 1+00 TO 8+50.82
C4.2	EPPERLY WAY: STA 1+00 TO 9+74.97
C4.3	WILLAMETTE FALLS DRIVE
SIGNAGE AND STRIPING PLAN	
C5.0	SITE PLAN, LEGEND, AND DETAILS
SITE DETAILS	
C6.0	STREET DETAILS
C6.1	STREET AND STORM DETAILS
C6.2	STORM AND SANITARY DETAILS
C6.3	WATER DETAILS
C6.4	STORM PLANTER DETAILS
LANDSCAPE PLAN	
L1.0	STREET TREE PLANTING PLANS
L1.1	WATER QUALITY SWALES: PLANTING PLAN AND DETAILS
L1.2	SWALE PLANTING LEGEND
STREET LIGHTING PLAN	
EL1.0	STREET LIGHTING AND DETAILS
EL2.0	STREET LIGHTING AND DETAILS
EL3.0	STREET LIGHTING DIAGRAM
EROSION AND SEDIMENT CONTROL PLANS	
EC-00	COVER SHEET
EC-01	CLEARING AND DEMOLITION ESCP
EC-02	GRADING, STREET, AND UTILITY CONSTRUCTION ESCP
EC-03	EROSION AND SEDIMENT CONTROL DETAILS

WEST LINN PLANNING COMMISSION
FINAL DECISION NOTICE
SUB 06-02

IN THE MATTER OF A 71-LOT SUBDIVISION AT 985 WILLAMETTE COVE

At their regular meeting of September 14, 2006, the West Linn Planning Commission held a public hearing to consider the request by Jerry Jennings to approve a 71-lot subdivision. The site consists of tax lot 1000 of Assessor's Map 2-1E-34DC. The approval criteria for a subdivision are found within Chapter 85 of the Community Development Code. The hearing was conducted pursuant to the provisions of CDC, Chapter 99.

The hearing commenced with a staff report presented by Peter Spir, Associate Planner. The applicant, represented by Rick Givens, Roger Alfred and Bruce Goldson provided a presentation. Public testimony followed and focused upon the anticipated impact of traffic generated by this subdivision upon area roads, particularly the I-205/10th Street interchange area. There were repeated requests that a moratorium be imposed. City staff explained the statutory requirements entailed in a moratorium. City engineering staff explained that the impacts of the subdivision would be mitigated by proportionate payments by the applicant towards the I-205/10th Street interchange. City Engineering staff stated that the traffic analysis by the applicant's traffic engineer had been reviewed and found to be credible.
The public hearing was closed.

In discussion, Commissioner Vice-Chair Jones stated that he does not trust the City's Transportation Plan. That it is inadequate to meet the recent surge in development applications in the Willamette area. Commissioner Bonoff expressed similar reservations about the cumulative impact of the project with other impending projects upon area traffic.
Conversely, Commissioner Fisher supported staff's findings. He stressed the need to look at this application purely within the context of the approval criteria and also recognize the fact that this application adds only six additional households to the area traffic over the original 65 units that previously occupied this site. Commissioner Fisher moved to approve the application with conditions of approval as amended.
Commissioner Babbitt seconded the motion. Put to a vote the motion passed three to two. Ayes: Commissioners Fisher, Stark, and Babbitt.
Nayes: Commissioners Bonoff and Jones.

The conditions of approval are as follows:

1. Public improvements must meet TVF&R current requirements.

2. All significant trees identified by City Arborist Mike Perkins shall be saved.

Protection with chain link fencing at 10 feet past the dripline shall be in place **prior** to site clearing, grubbing, grading or storage of material near trees. Fences shall remain in place through completion of final platting and associated development.

3. Applicant shall contribute monies toward improvements at 8th Ave/8th Ct/10th St and Blankenship Rd/Tannler Dr intersections in the amount proportionate to the anticipated impacts identified in the applicant's traffic study. The applicant's proportionate share shall be based upon the applicant's PM peak hour trips as a percentage of future PM peak hour trips at full buildout through each intersection.

4. The applicant shall construct an eight-foot wide all weather foot and bicycle path through tract B near lots 4 and 5 with grades not to exceed 15%. A three-foot high fence shall be installed on either side of the path.

5. All private existing storm, sanitary, and water lines that will be in the new public ROW must be removed or must demonstrate ability to meet required city standards and sizing.

6. Stormwater runoff from entire site must be treated to City standards. Detention pond must accommodate additional impervious area to City standards.

7. Seventy-foot ROW for Willamette Falls Drive meets arterial standards. ROW dedication along frontage shall be made to provide at least 70' ROW along frontage. Dedication widths will vary to provide 70' minimum total.

8. In lieu of half-street improvements along Willamette Falls Drive frontage, the developer shall provide a city approved analysis documenting the structural integrity of the existing half street along Willamette Falls Drive frontage and repair any sidewalk or curb damage to the City's satisfaction.

9. Deadend Street shall meet current TVF&R standards.

10. All public improvements must be in accordance with the City of West Linn Public Works Design and Construction standards and all other applicable City codes and requirements.

This decision will become effective 14 days from the date of mailing of this final decision as identified below. Those parties with standing (i.e., those individuals who submitted letters into the record, or provided oral or written testimony during the course of the hearing, or signed in on the attendance sheet at the hearing, or who have contacted City Planning staff and made their identities known to staff) may appeal this decision to the West Linn City Council within 14 days of the mailing of this decision pursuant to the provisions of Chapter 99 of the Community Development Code. Such appeals would require a fee of $400 and a completed appeal application form together with the specific grounds for appeal to the Planning Director prior to the appeal-filing deadline.

CITY OF WEST LINN CASE FILE: SUB 06-02

AS-BUILT PLAN RE-SUBMITTAL- MAY 30, 2008

NO.	DATE	BY	REVISION COMMENTS

Design	Drawn	Checked	Date	Initial Issue Date:
RCR/CLM	LMB	PHM		

RECORD DRAWING
BY: ____
DATE: 6/3/08
Permitted design drawings stamped by:
Mike A. Peebles
Engineer 16682
July 20, 1993

West Hills
DEVELOPMENT
735 SW 158TH AVENUE
BEAVERTON, OR 97006

"AS BUILT DRAWING"
DATE 6/03/08 BY ____

ARBOR COVE
COVER SHEET

otak
Incorporated
17355 SW Boones Ferry Rd.
Lake Oswego, OR 97035-5217
Phone: (503) 635-3618
FAX: (503) 635-5395
Internet: www.otak.com

14165	C165C000
Project No.	Drawing No.

C0.0
Sheet No.

Copyright 2007 ©

XREF LIST
Ltscale: 100
Resolved
C165X001

GENERAL NOTES

1. ALL CONSTRUCTION SHALL BE IN ACCORDANCE WITH THE "CITY OF WEST LINN STREET/UTILITY DESIGN AND CONSTRUCTION STANDARDS", DATED MAY 2005 AND OAR'S CHAPTER 333. ALL STREET, STORM SEWER AND SANITARY SEWER CONSTRUCTION THAT IS NOT ADDRESSED IN THE CITY'S STANDARDS SHALL BE IN ACCORDANCE WITH APWA STANDARDS. ALL WATER SYSTEM CONSTRUCTION THAT IS NOT ADDRESSED IN THE CITY'S STANDARDS SHALL BE IN ACCORDANCE WITH AWWA STANDARDS. CONTRACTOR TO OBTAIN A COPY OF THE GEOTECHNICAL REPORT PREPARED FOR THIS PROJECT PRIOR TO CONSTRUCTION.
2. PRIOR TO ANY CONSTRUCTION, LOCATIONS OF EXISTING UTILITIES SHALL BE VERIFIED BY THE CONTRACTOR. WHEN ACTUAL CONDITIONS DIFFER FROM THOSE SHOWN ON THE PLANS, THE CONTRACTOR SHALL NOTIFY THE ENGINEER PRIOR TO PROCEEDING WITH CONSTRUCTION.
3. ORGANIC AND NON-DESIRABLE MATERIALS SHALL BE REMOVED FROM THE CONSTRUCTION AREA AS DIRECTED BY THE GEOTECHNICAL ENGINEER.
4. ALL FILL AREAS SHALL BE STRIPPED OF ORGANIC MATERIAL. FILL WILL BE PLACED IN 6-INCH LAYERS AND COMPACTED TO 95 PERCENT RELATIVE MAXIMUM DENSITY ACCORDING TO AASHTO T-180 STANDARDS. LANDSCAPE AREAS SHALL BE COMPACTED TO 90 PERCENT. THE CONTRACTOR SHALL PROVIDE COMPACTION TESTING, ONE FOR EVERY 10,000 SQUARE FEET OF AREA AND FOR EVERY 2 LAYERS OR 16" AND EVERY 100 LINEAR FEET OF FILL PLACED. COMPACTION REPORTS FROM A NATIONALLY ACCREDITED TESTING LAB SHALL BE SUPPLIED TO THE ENGINEER. A COPY OF THE REPORTS SHALL BE GIVEN TO THE CITY.
5. CONTRACTOR SHALL LEAVE ALL AREAS OF THE PROJECT FREE OF DEBRIS AND UNUSED CONSTRUCTION MATERIALS.
   a. AREAS TO BE LANDSCAPED SHALL BE SMOOTHED AND LEFT TO THE GRADES INDICATED ON THE GRADING PLAN, PLUS OR MINUS 0.1 FOOT.
   b. ALL DISTURBED AREAS NOT TO BE LANDSCAPED SHALL BE SEEDED PER EROSION CONTROL NOTES ON APPROVED GRADING PERMIT SET.
   c. ALL EXCESS/EXTRA MATERIAL SHALL BE REMOVED FROM THE SITE.
6. ANY CHANGES FROM THE APPROVED PLANS SHALL BE REQUESTED BY THE CONTRACTOR IN WRITING. THE DESIGN ENGINEER AND THE CITY OF WEST LINN'S PROJECT ENGINEER MUST APPROVE THE CHANGE PRIOR TO ITS IMPLEMENTATION. COMPLEXITY OF MODIFICATION WILL DETERMINE IF REVISED PLANS ARE REQUIRED.
7. CITY OF WEST LINN DETAILS SHALL BE USED AT LOCATIONS AS SPECIFIED IN THE PLANS, SEE DETAIL SHEETS.
8. DURING CONSTRUCTION, ALL EROSION CONTROL MEASURES SHALL CONFORM TO CITY OF WEST LINN EROSION CONTROL STANDARDS.
9. IN CASE OF A DISCREPANCY BETWEEN THE DRAWINGS AND THE FIGURES WRITTEN THEREON, THE FIGURES SHALL BE DEEMED TO GOVERN.
10. THE OWNER WILL SUPPLY ONE SET OF STAKES FOR EACH CONSTRUCTION OPERATION AS DESCRIBED IN THE CONTRACT DOCUMENTS AND SPECIFICATIONS. THE CONTRACTOR SHALL DESIGNATE A REPRESENTATIVE OR REPRESENTATIVES WHO ARE AUTHORIZED TO REQUEST STAKES. STAKING REQUESTS FROM AUTHORIZED REPRESENTATIVE SHALL BE MADE TO DAVE LIDEN AT OTAK (503-699-2401) AT LEAST 48 HOURS IN ADVANCE OF THE NEED FOR SAID STAKES. ONLY REQUESTS FROM AUTHORIZED REPRESENTATIVES WILL BE HONORED. ANY RESTAKING WILL BE DONE AT THE EXPENSE OF THE CONTRACTOR.
11. WEEK DAY WORK HOURS ARE 7 AM TO 7 PM; SATURDAY WORK HOURS ARE 9 AM TO 5 PM, AND NO WORK ON SUNDAYS OR HOLIDAYS.
12. THE CITY OF WEST LINN SHALL BE PRESENT WHEN TESTING IS PERFORMED AND SUPPLIED WITH A COPY OF TEST RESULTS. ALL FACILITIES WILL BE ACCEPTED BY THE CITY PRIOR TO CONNECTION TO EXISTING SYSTEMS.
13. ALL FEES FOR STREET TREES SHALL BE PAID TO THE CITY OF WEST LINN PARKS AND RECREATION DEPT.
14. NO BUILDING PERMITS SHALL BE ISSUED UNTIL ALL IMPROVEMENTS HAVE BEEN COMPLETED AND ACCEPTED
15. THE CONTRACTOR SHALL REMOVE ALL SOFT OR OTHERWISE UNSUITABLE MATERIAL AT SUBGRADE AND REPLACE WITH APPROVED MATERIAL AT THE DIRECTION OF THE PROJECT GEOTECHNICAL ENGINEER. THE CONTRACTOR SHALL COMPACT TO A LINE ONE FOOT BEHIND BACK OF CURB.
16. FINAL SUBGRADE PROOF-ROLL WITH 10 CY TRUCK LOADED WITH ROCK IS REQUIRED PRIOR TO PLACING AGGREGATE BASE.
17. FINAL BASE ROCK PROOF ROLL WITH 10 CY TRUCK LOADED WITH ROCK IS REQUIRED PRIOR TO PAVING. BASE ROCK TO BE COMPACTED TO 95 PERCENT RELATIVE MAXIMUM DENSITY ACCORDING TO AASHTO T-180 STANDARDS.
18. PLEASE NOTE CITY OF WEST LINN STANDARD CONSTRUCTION SPECIFICATION SECTION 505.03.11 FOR WEATHER RELATED LIMITATIONS ON THE PLACEMENT OF ASPHALTIC CONCRETE.
19. THE DENSITY OF THE COMPACTED TOP LIFT OF AC SHALL BE AT LEAST 92% OF RICE IN CONFORMANCE WITH AASHTO T209 AS MODIFIED BY THE OREGON STATE HIGHWAY DEPARTMENT.
20. DENSITY TESTS WILL BE REQUIRED FOR TRENCH BACKFILL AND ASPHALT, PER THE CITY OF WEST LINN STANDARD CONSTRUCTION SPECIFICATIONS. COPIES OF ALL REPORTS ARE TO BE SUPPLIED TO THE CITY INSPECTOR AND DESIGN ENGINEER.
21. CONTRACTOR SHALL SUBMIT SCHEDULE DETAILING SEQUENCE OF CONSTRUCTION PRIOR TO THE PRE-CONSTRUCTION MEETING.
22. THE STRENGTH OF CONCRETE USED FOR CURBS, GUTTERS AND SIDEWALKS SHALL BE 3300 psi.

GRADING

GEOTECHNICAL RECOMMENDATIONS FOR SITE GRADING, FOUNDATION DESIGN, AND CONSTRUCTION ARE BASED ON THE GEOTECHNICAL ENGINEERING REPORT DATED FEBRUARY 1, 2007 BY GEOPACIFIC ENGINEERING, INC.

1. PROJECT GRADING LIMITS SHALL BE ALL PROPERTY LINES AND STREET RIGHTS-OF-WAY, UNLESS OTHERWISE SHOWN ON THE GRADING PLANS.
2. STRAIGHT GRADES SHALL BE RUN BETWEEN ALL FINISH GRADE ELEVATIONS AND/OR FINISH CONTOUR LINES SHOWN, UNLESS OTHERWISE NOTED.
3. ALL PROPOSED ELEVATIONS SHOWN SHALL BE CONSIDERED TO BE FINISH SURFACE ELEVATIONS UNLESS OTHERWISE NOTED. ALL SURFACES SHALL BE GRADED SMOOTH AND FREE OF IRREGULARITIES THAT MIGHT ACCUMULATE SURFACE WATER.
4. DUST ABATEMENT SHALL BE MAINTAINED BY ADEQUATE WATERING OF THE SITE.
5. CONTRACTOR TO REMOVE ALL UNSUITABLE MATERIAL, DEBRIS, AND ORGANIC MATERIAL WITHIN GRADING AND FILL LIMITS PRIOR TO FILL PLACEMENT. NEW FILL MATERIAL SHALL BE BENCHED INTO EXISTING GROUND IN ACCORDANCE WITH RECOMMENDATIONS IN THE GEOTECHNICAL REPORT.
6. THE REMOVAL OF UNSUITABLE MATERIAL SHALL BE DONE IN CONSULTATION WITH THE GEOTECHNICAL ENGINEER. UNSUITABLE MATERIAL SHALL BE DISPOSED OF AS DETERMINED BY THE GEOTECHNICAL ENGINEER. IF SUCH MATERIAL IS REMOVED FROM THE SITE IT SHALL BE REMOVED AT THE CONTRACTOR'S SOLE EXPENSE.
7. THE CONTRACTOR SHALL UTILIZE SUITABLE SUBGRADE MATERIAL FOR ALL FILLS. ALL FILLS IN FINISH PAVED AREAS ARE TO BE PLACED IN 8" LIFTS. THE CONTRACTOR SHALL COMPACT EACH LIFT TO A DENSITY NOT LESS THAN 95% OF THE MAXIMUM DRY DENSITY DETERMINED BY STANDARD PROCTOR (ASTM D-698) OR EQUIVALENT. SUBGRADE SHALL BE COMPACTED TO A LINE ONE FOOT BEYOND EDGE OF PAVING, CURBS, SIDEWALKS AND SIDEWALK EXTENSIONS.
8. ANY FILL PLACED IN BUILDING PAD AREAS SHALL BE COMPACTED. THE FILL SHALL BE CERTIFIED TO MEET THE STRUCTURAL FILL REQUIREMENTS OF THE UNIFORM BUILDING CODE AND THE RECOMMENDATIONS OF THE GEOTECHNICAL REPORT. COMPACTION REPORTS SHALL BE MADE AVAILABLE TO THE ENGINEER.
9. ALL CUT OR FILL SLOPES SHALL BE CONSTRUCTED AT NO STEEPER THAN TWO (2) HORIZONTAL TO ONE (1) VERTICAL UNLESS OTHERWISE SHOWN ON THE PLANS OR SPECIFIED IN THE GEOTECHNICAL REPORT.
10. IF SPRINGS OR GROUND WATER ARE ENCOUNTERED DURING CONSTRUCTION, THE CONTRACTOR SHALL ADVISE THE GEOTECHNICAL ENGINEER AND THE CIVIL ENGINEER OF THE CONDITION FOUND AND COORDINATE CONSTRUCTION ACTIVITIES IN A MANNER THAT WILL ALLOW THE ENGINEERS TIME TO REVIEW THE SITUATION AND PREPARE A PLAN TO PROPERLY DISPOSE OF THE WATER ENCOUNTERED.
11. THE CONTRACTOR SHALL HAVE A SUFFICIENT NUMBER OF COMPACTION TESTS PERFORMED TO MEET CITY OF WEST LINN REQUIREMENTS AT THE DEVELOPER'S EXPENSE. TESTS SHALL BE PERFORMED BY A QUALIFIED TESTING AGENCY AND WRITTEN RESULTS SHALL BE PROVIDED TO THE APPROPRIATE AGENCY. SHOULD COMPACTION REQUIREMENTS NOT BE MET, CONTRACTOR SHALL RECOMPACT THE FILL AND PAY ALL ADDITIONAL TESTING COSTS RELATED TO THE RECOMPACTION.
12. THE CONTRACTOR SHALL BE RESPONSIBLE FOR ADJUSTING ALL CATCH BASINS, CLEANOUTS, VAULTS, ETC., THAT ARE AFFECTED BY CONSTRUCTION AND/OR FILL TO FINISH GRADE. STORM DRAIN INLET STRUCTURES SHALL BE ADJUSTED SO WATER FLOWS INTO THE STRUCTURE WITHOUT PONDING.
13. RETAINING WALL CONSTRUCTION SHALL CONFORM TO DETAILS INCLUDED WITHIN THE GEOTECHNICAL REPORT. THE CONTRACTOR IS TO OBTAIN ALL NECESSARY PERMITS FOR RETAINING WALL CONSTRUCTION.
14. ORGANIC MATERIAL (TREES, BRUSH, ROOTS, STUMPS, ETC.) SHALL BE REMOVED FROM THE SITE. STRIPPING SHALL GENERALLY BE 6 INCHES, BUT MAY BE DEEPER IN WOODED AREAS. UNSUITABLE EXCESS STRIPPINGS SHALL BE DISPOSED OF BY THE CONTRACTOR.
15. CONTRACTOR TO OBTAIN ALL PERMITS. ALL WORK MUST COMPLY WITH GOVERNING AGENCY STANDARDS. CONTRACTOR TO NOTIFY THE ENGINEER WHEN THE SUBGRADING IS COMPLETE AND 24 HOURS PRIOR TO THE PLACEMENT OF GRAVEL BASE MATERIAL. CONTRACTOR SHALL ALSO PROVIDE 24-HOUR NOTICE PRIOR TO FINAL PAVING FOR AND INSPECTION OF THE WORK. FAILURE TO TO DO SO WILL MAKE ANY SUBGRADE OR DRAINAGE PROBLEM THE RESPONSIBILITY OF THE CONTRACTOR.

STORM AND SANITARY SEWER NOTES

U1. MANHOLE CONSTRUCTION SHALL BE IN ACCORDANCE WITH THE CITY OF WEST LINN'S PUBLIC WORKS STANDARDS. MANHOLES SHALL CONFORM TO ASTM C-478.

U2. TRENCH BEDDING, PIPE ZONE AND BACKFILL IN PAVED AREAS WILL BE CLASS B, 3/4-INCH MINUS CRUSHED AGGREGATE COMPACTED TO 95 PERCENT RELATIVE MAXIMUM DENSITY, AASHTO T-180.

U3. UNPAVED AREAS OUTSIDE ROW TO BE CLASS A NATIVE BACKFILL MATERIAL EXCEPT BEDDING AND PIPE ZONE MATERIAL (SEE WEST LINN DETAIL WL-200 ON SHEET C6.2) UNLESS OTHERWISE NOTED. CLASS A NATIVE BACKFILL TO BE COMPACTED TO A MINIMUM OF 95 PERCENT OF THE MAXIMUM DRY DENSITY, AASHTO T-180.

U4. ALL PUBLIC STORM DRAINS SHALL BE CONSTRUCTED WITH HDPE CORRUGATED SMOOTH-INTERIOR ASTM F794 PIPE (ULTRA-RIB OR EQUAL), EXCEPT CULVERTS AS SPECIFIED.

U5. ALL PUBLIC SANITARY SEWERS SHALL BE CONSTRUCTED WITH PVC D3034 PIPE. PRIOR TO ACCEPTANCE, ALL PUBLIC SANITARY SEWERS SHALL BE TV, PRESSURE, AND DEFLECTION TESTED IN ACCORDANCE WITH THE CITY OF WEST LINN'S REQUIREMENTS.

U6. ALL PUBLIC STORM SEWERS SHALL BE TV AND DEFLECTION TESTED.

U7. WATER TIGHT PLUGS SHALL BE INSTALLED IN THE ENDS OF SANITARY AND STORM LATERALS AND A 2" X 4" WOOD MARKER PLACED AT THE LATERAL END FROM PIPE INVERT TO AT LEAST 36" ABOVE THE FINISH GRADE. THE 2" X 4" TOP SHALL BE PAINTED (GREEN FOR SANITARY) AND (WHITE FOR STORM) AND MARKED WITH THE DEPTH OF THE LATERAL MEASURED FROM THE FINISHED GROUND ELEVATION TO THE INVERT OF PIPE AT THE TIME THE CURBS ARE POURED, AN (S FOR SANITARY) AND (SD FOR STORM) SHALL BE STAMPED IN THE TOP OF THE CURB AT EACH POINT A LATERAL CROSSES BENEATH THE CURB LINE.

U8. ALL SANITARY SEWER MANHOLES SHALL BE VACUUM TESTED.

U9. CONSTRUCTION NOTES FOR STORM AND SANITARY SEWERS ARE ON SHEETS C3.0 THROUGH C3.5 AND C4.0 THROUGH C4.5 RESPECTIVELY.

U10. PRIOR TO MAKING THE CONNECTION TO THE EXISTING SYSTEMS, THE SANITARY SEWER AND STORM SEWER SHALL BE ACCEPTED BY THE CITY.

U11. RIM ELEVATIONS ARE SHOWN FOR INFORMATION PURPOSES ONLY. CONTRACTOR SHALL FIELD ADJUST MANHOLE RIM ELEVATIONS TO CONFORM WITH FINISH GRADES.

U12. CONTRACTOR TO POTHOLE AND VERIFY DEPTH AND LOCATION FOR ALL CONNECTIONS TO EXISTING UTILITIES. WHEN ACTUAL CONDITIONS DIFFER FROM THOSE SHOWN ON THE PLANS, THE CONTRACTOR SHALL NOTIFY THE ENGINEER PRIOR TO PROCEEDING WITH CONSTRUCTION.

WATER NOTES

W1. ALL WATER PIPE AND FITTINGS SHALL BE DUCTILE IRON CLASS 52 AND CONFORM TO STANDARD CITY SPECIFICATIONS AND DETAILS. ALL WATER SERVICE LINES TO BE TYPE K COPPER PIPE PER CITY OF WEST LINN SPECIFICATIONS.

W2. WATERLINES SHALL BE PRESSURE TESTED FOLLOWING COMPLETION. PRESSURE TESTS SHALL BE IN ACCORDANCE TO THE CITY OF WEST LINN'S STANDARDS WITH A MINIMUM TEST PRESSURE OF 180 PSI. WHEN THE PRESSURE TEST IS PERFORMED, THE TEST PRESSURE OF 180 PSI SHALL STABILIZE BEFORE THE TEST BEGINS. SERVICE LINES WILL ALSO BE TESTED TO THE METER LOCATION . THE DURATION OF THE PRESSURE TEST SHALL BE 1 HOUR. ZERO PRESSURE LOSS IS REQUIRED FOR A SUCCESSFUL TEST.

W3. PRIOR TO BEING PLACED INTO SERVICE, THE WATERLINE SHALL BE FLUSHED, STERILIZED AND FLUSHED AGAIN ALL IN ACCORDANCE WITH WEST LINN CITY STANDARDS.

W4. PRIOR TO CONNECTION TO EXISTING WATERLINE, A SAMPLE SHALL BE TAKEN AND TESTED FOR BACTERIOLOGICAL QUALITY. RESULTS MUST BE WITHIN STANDARDS OF THE STATE OF OREGON.

W5. CONCRETE THRUST BLOCKING SHALL BE PROVIDED AT ALL WATERLINE FITTINGS AS REQUIRED BY CITY STANDARDS. BLOCKING SHALL BE 3000 PSI CONCRETE PLACED AGAINST UNDISTURBED EARTH AND CLEAR OF JOINT ACCESSORIES. BEARING AREA OF THRUST BLOCK SHALL BE COMPUTED ON THE BASIS OF ALLOWABLE SOIL BEARING PRESSURE. ALL PIPE FITTINGS IN CONTACT WITH CONCRETE SHALL BE WRAPPED IN PLASTIC. RESTRAINED JOINTS MAY BE USED INSTEAD OF THRUST BLOCKING WITH PRIOR APPROVAL FROM THE CITY.

W6. MINIMUM COVER OVER WATERLINES IS TO BE 36" AS MEASURED FROM FINISH GRADE TO TOP OF PIPE. MINIMUM VERTICAL SEPARATION BETWEEN WATERLINE AND SANITARY SEWER AT A CROSSING IS 18". SANITARY SEWER AT WATERLINE CROSSINGS WITH LESS THAN THE MINIMUM VERTICAL SEPARATION SHALL BE CONSTRUCTED OF DUCTILE IRON PIPE WITH WATERTIGHT JOINTS. IN SUCH CASES THE 18-FOOT LENGTH OF SANITARY SEWER SHALL BE CENTERED AT THE CROSSING.

W7. ALL WATER SERVICES SHALL BE SEPARATED BY A MINIMUM HORIZONTAL DISTANCE OF 2' AT THE MAINLINE.

W8. FIRE HYDRANT ASSEMBLIES TO BE MUELLER CENTURION A-423 OR CLOW MEDALLION F-2545 AND ARE TO BE INSTALLED PER CITY OF WEST LINN STANDARD SPECIFICATIONS AND DETAILS.

W9. TRENCH BEDDING, PIPE ZONE AND BACKFILL IN PAVED AREAS WILL BE 3/4-INCH MINUS CRUSHED AGGREGATE COMPACTED TO 95 PERCENT RELATIVE MAXIMUM DENSITY, AASHTO T-180. UNPAVED AREAS OUTSIDE ROW TO BE CLASS A NATIVE BACKFILL MATERIAL EXCEPT BEDDING AND PIPE ZONE MATERIAL (SEE WEST LINN DETAIL WL-200 ON SHEET C6.2) UNLESS OTHERWISE NOTED. CLASS A NATIVE BACKFILL TO BE COMPACTED TO A MINIMUM OF 95 PERCENT OF THE MAXIMUM DRY DENSITY, AASHTO T-180.

W10. GATE VALVES SHALL BE RESILIENT SEAL, NOT RISING STEM WITH "O" RING PACKING, COMPLYING WITH AWWA CLASS "C" SPECIFICATIONS. THE VALVES SHALL BE DESIGNED TO WITHSTAND A TESTING PRESSURE OF 180 PSI. BUTTERFLY VALVES SHALL BE RUBBER SEAL TYPE AND BUBBLE-TIGHT AT 150 PSI, AND SHALL CONFORM TO AWWA C504. VALVE BOXES SHALL BE "VANCOUVER" PATTERN. PRESSURE TEST SHALL BE CONDUCTED AT 180 PSI FOR ONE HOUR WITH NO LOSS.

ALL WATER LINE PRESSURE AND CHLORINATION TESTING SHALL BE PERFORMED WITH THE CITY PRESENT.

W11. CONSTRUCTION NOTES FOR WATERLINE ARE ON SHEETS C4.0 THROUGH C4.5.

W12. CONTRACTOR TO POTHOLE AND VERIFY DEPTH AND LOCATION FOR ALL CONNECTIONS TO EXISTING UTILITIES. WHEN ACTUAL CONDITIONS DIFFER FROM THOSE SHOWN ON THE PLANS, THE CONTRACTOR SHALL NOTIFY THE ENGINEER PRIOR TO PROCEEDING WITH

W13. CONSTRUCTION.

STREET

S1. ALL ASPHALT PAVEMENT SHALL BE COMPACTED TO AT LEAST 92% OF RICE DENSITY (TOP LIFT) AND 91% OF RICE DENSITY (LOWER LIFTS), IN CONFORMANCE WITH AASHTO T-209 (AS MODIFIED BY OSHD)

S2. ALL AGGREGATE BASE MATERIAL SHALL BE COMPACTED TO 95% OF THE MODIFIED PROCTOR, ACCORDING TO ASTM D1557.

S3. ALL TREATED AND UNTREATED SUBGRADE MATERIALS SHALL BE COMPACTED TO 95% OF THE MODIFIED PROCTOR, IN CONFORMANCE WITH ASTM D 1557, OR AS APPROVED BY GEOTECHNICAL ENGINEER.

NO.	DATE	BY	REVISION COMMENTS

Design | Drawn | Checked | Date | Initial Issue Date:
RCR/CJM | LMB | PHM

RECORD DRAWING
BY: [signature]
DATE: 4/3/08
Permitted design drawings stamped by:
Mike A. Peebles
Engineer 16682
July 20, 1993

West Hills DEVELOPMENT
730 SW 158TH AVENUE
BEAVERTON, OR 97006

"AS BUILT" DRAWING
DATE 4/3/08 BY [signature]

AS-BUILT PLAN RE-SUBMITTAL- MAY 30, 2008

ARBOR COVE

GENERAL NOTES

otak Incorporated
17355 SW Boones Perry Rd.
Lake Oswego, OR 97035-5217
Phone: (503) 635-3618
FAX: (503) 635-5395
Internet: www.otak.com

14165 C165C001
Project No. Drawing No.

C0.1
Sheet No.

Copyright 2007 ©

LKO: SARAHN 02/29/2008 10:32am --> L:\PROJECT\14100\14165\DWG\C165C001.DWG

XREF LIST
Ltscale: 60
Resolved
C165X001
0165X190
C165X230

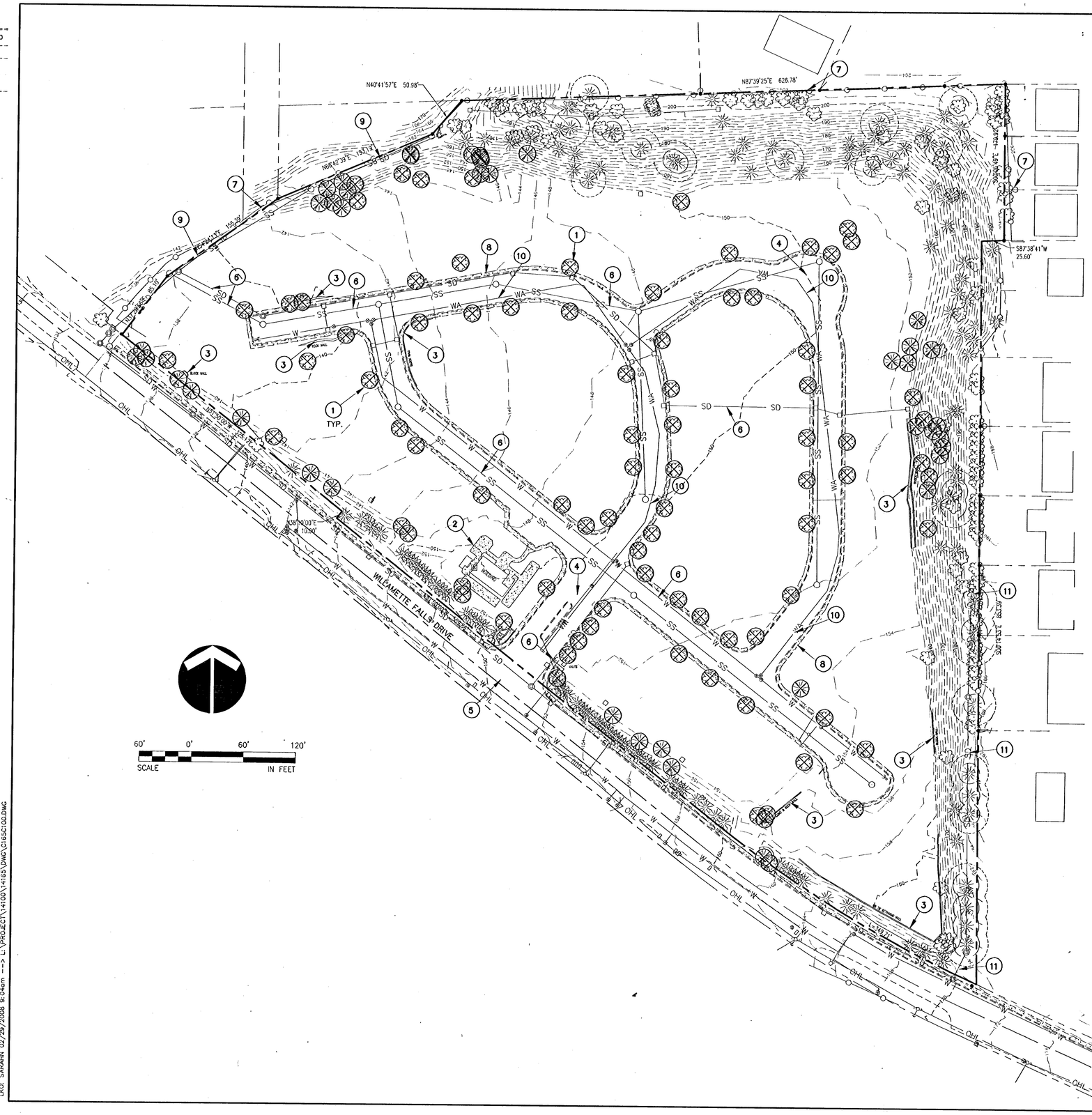

DEMOLITION KEYNOTES

1. REMOVE EXISTING TREE. SEE SHEET C1.3
2. REMOVE EXISTING BUILDING.
3. REMOVE EXISTING WALL.
4. REMOVE EXISTING A/C ROAD.
5. EXISTING A/C ROAD, CURB, AND SIDEWALK TO REMAIN ON WILLAMETTE FALLS DRIVE UNLESS OTHERWISE NOTED.
6. REMOVE ALL EXISTING UTILITIES ON SITE WITHIN ROW AND PROPOSED BUILDING ENVELOPES. BACKFILL TRENCHES WITH SELECT MATERIAL AS APPROVED BY GEOTECHNICAL ENGINEER AND CITY.
7. EXISTING FENCE TO REMAIN ALONG SHARED PROPERTY LINE.
8. REMOVE EXISTING CURB AND SIDEWALK.
9. PUBLIC SANITARY AND STORM LINES TO REMAIN.
10. ASSUMED WATERLINE LOCATION (NOT SHOWN ON SURVEY)
11. EXISITING PRIVATE DRAIN LINE TO REMAIN.

DEMOLITION NOTES

1. REMOVE ALL EXISTING STRUCTURES, FOUNDATIONS, AND APPURTENANCES ASSOCIATED WITH FORMER USE AS MOBILE HOME COMMUNITY.

LEGEND:

	EXISTING
SANITARY SEWER	SS
STORM DRAIN	SD SD
WATER LINE	W W
ASSUMED WATER LINE	WA WA
POWER LINE	OHL
FENCE	
A/C ROAD	
PROPERTY LINE	
2' CONTOUR	158
10' CONTOUR	140
EASEMENT	
RETAINING WALL	
WATER VALVE	
FIRE HYDRANT	
STORM MANHOLE	
SANITARY MANHOLE	
CATCH BASIN	
TREE	
SIGNIFICANT TREE (PER LAND USE APPROVAL)	
TREE TO BE REMOVED	

NO.	DATE	BY	REVISION COMMENTS

Design RCR/CLM Drawn LMB Checked PHM Date Initial Issue Date:

RECORD DRAWING
BY: [illegible]
DATE: 02/3/08
Permitted design drawings stamped by:
Mike A. Peebles
Engineer 16682
July 20, 1993

West Hills DEVELOPMENT
735 SW 158TH AVENUE
BEAVERTON, OR 97006

"AS BUILT DRAWING"
BY [illegible]
DATE 6/6/08

AS-BUILT PLAN RE-SUBMITTAL- MAY 30, 2008

ARBOR COVE

SITE DEVELOPMENT PLAN
EXISITING CONDITIONS
AND DEMOLITION PLAN

otak Incorporated
17355 SW Boones Ferry Rd.
Lake Oswego, OR 97035-5217
Phone: (503) 635-3618
FAX: (503) 635-5395
Internet: www.otak.com

14165 C165C100
Project No. Drawing No.
C1.0
Sheet No.

Copyright 2007 ©

LKG: SARAHN 02/29/2008 9:04am --> L:\PROJECT\14100\14165\DWG\C165C100.DWG

XREF LIST
Ltscale: 60
Resolved
C165X001
C165X230
0165X190
C165X010

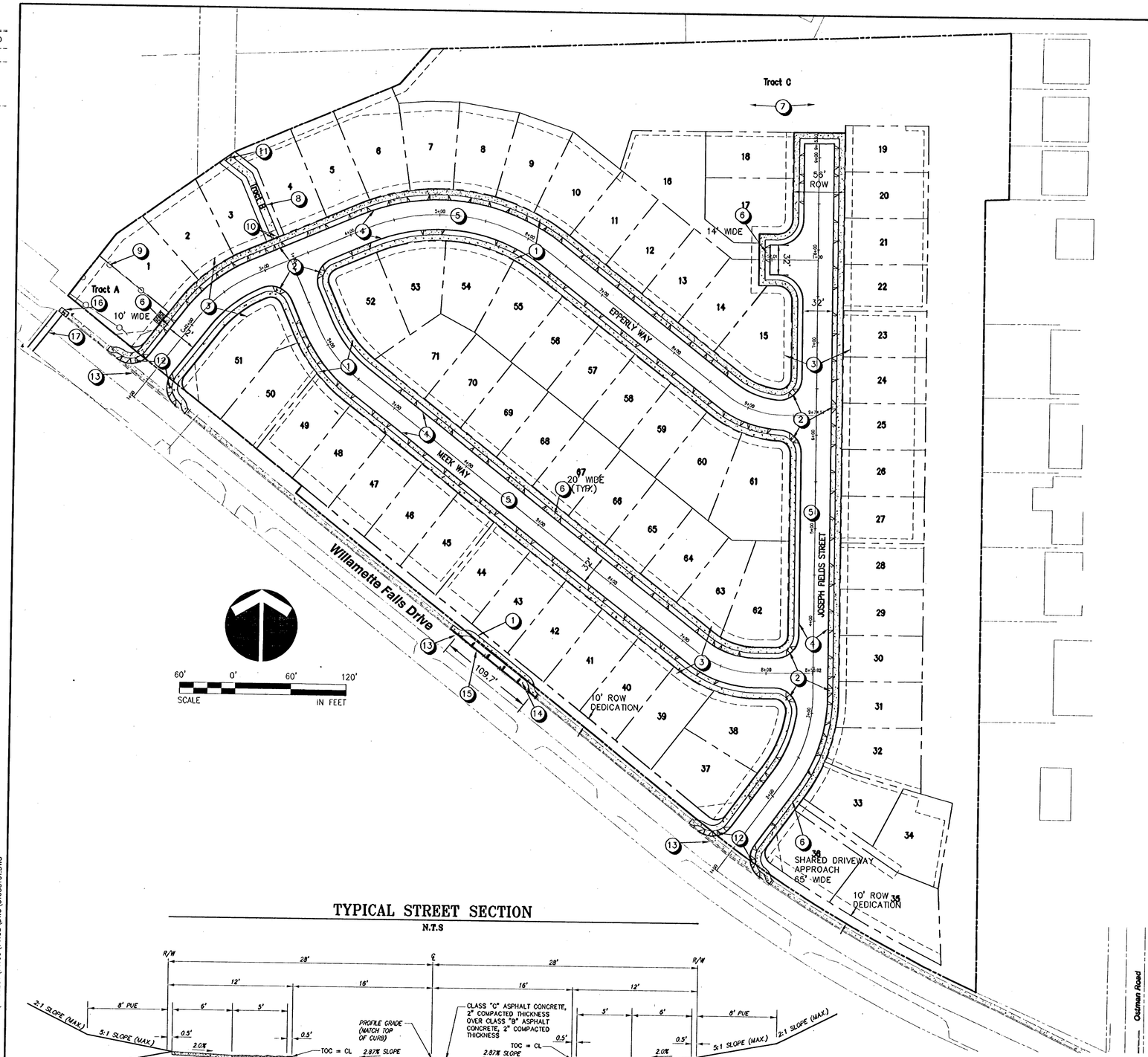

TYPICAL STREET SECTION

N.T.S

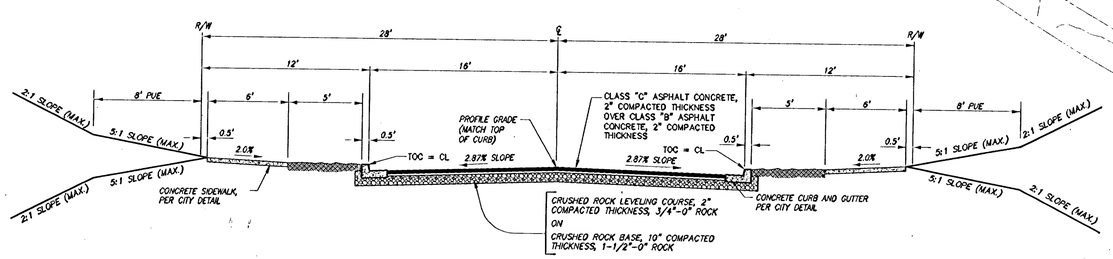

JOSEPH FIELDS STREET (STA 1+00.00 TO STA 9+15.30)
MEEK WAY (STA 1+00.00 TO STA 9+74.97)
EPPERLY WAY (STA 1+00.00 TO STA 8+50.82)

KEY NOTES

1. 6' WIDE SIDEWALK PER STD. DETAIL WL-508, SHEET C6.0
2. SIDEWALK RAMP PER STD. DETAIL 507A, SHEET C6.0
3. PRIVATE UTILITY EASEMENT (PUE) 8' WIDE (TYPICAL).
4. CURB AND GUTTER PER STD. DETAIL WL-501, SHEET C6.0
5. ASPHALT CONCRETE PAVEMENT – SEE TYPICAL STREET SECTION THIS SHEET
6. CONCRETE DRIVEWAY APPROACH (TYPICAL) PER STD. DETAIL WL-503, SHEET C6.0 (20' DRIVEWAY WIDTH UNLESS NOTED OTHERWISE)
7. OPEN SPACE
8. PEDESTRIAN/BIKE PATHWAY PER STD. DETAIL WL-510, SHEET C6.0
9. INSTALL 5' HIGH VINYL FENCE PER STD. DETAIL WL 616, SHEET C6.2
10. INSTALL BOLLARDS
11. INSTALL TEMPORARY BARRICADE PER STD. DETAIL WL-515, SHEET C6.0
12. DOUBLE SIDEWALK RAMP PER STANDARD DETAIL 507B, SHEET C6.1
13. SAWCUT EXISTING ASPHALT CONCRETE PAVEMENT
14. INSTALL FLOW THRU PLANTER, SEE SHEET C3.3
15. INSTALL CURB TO MATCH EXISTING ON WILLAMETTE FALLS DRIVE
16. INSTALL PARALLEL SIDEWALK CURB RAMP, SEE SHEET C3.3
17. INSTALL CROSSWALK (PEDESTRIAN STRIPING AND SIGNAGE BY CITY), SEE SHEET C5.0

LEGEND

	EXISTING	PROPOSED
SITE BOUNDARY		
RIGHT OF WAY		
LOT LINE		
LOT NUMBER / NAME		180
EASEMENT LINE		
SIDEWALK		

NOTE

ALL NEW HOUSES SHALL BE LESS THAN 4,500 SF UNLESS APPROVED BY CITY FIRE MARSHALL

NO.	DATE	BY	REVISION COMMENTS
Design	Drawn	Checked	Date	Initial issue Date:
RCR/CLM	LMB	PHM	

RECORD DRAWING
BY: [illegible]
DATE: 6/3/08
Permitted design drawings stamped by:
Mike A. Peebles
Engineer 16682
July 20, 1993

West Hills DEVELOPMENT
735 SW 158TH AVENUE
BEAVERTON, OR 97006

"AS BUILT DRAWING"
BY: [illegible]
DATE: 6/3/08

AS-BUILT PLAN. RE-SUBMITTAL- MAY 30, 2008

ARBOR COVE

SITE DEVELOPMENT PLAN
SITE PLAN AND TYPICAL STREET SECTION

otak Incorporated
17355 SW Boones Ferry Rd.
Lake Oswego, OR 97035-5217
Phone: (503) 635-3618
FAX: (503) 635-5395
Internet: www.otak.com

14165 C165C101
Project No. Drawing No.

C1.1
Sheet No.

Copyright 2007 ©

LKG: SARAHN 02/29/2008 9:05am --> L:\PROJECT\14100\14165\DWG\C165C101.DWG

XREF LIST
Ltscale: 60
Resolved
C165X001
C165X600
O165X190
C165X230
C165X010

GENERAL NOTES:

1. SEE DETAIL WL-402, SHEET C6.3 FOR WATER METER LOCATION.
2. SEE SHEETS EL1.0-EL2.0 FOR STREET LIGHTING DESIGN AND DETAILS. (BY NORTHSTAR ELECTRICAL CONTRACTORS)
3. SEE SHEETS C3.0-C3.4 FOR STREET AND STORM DRAIN DESIGN.
4. SEE SHEETS C4.0-C4.3 FOR SANITARY SEWER AND WATER DESIGN.

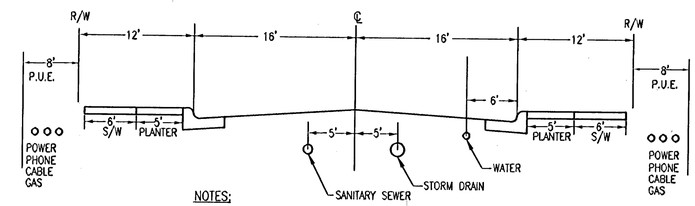

NOTES:

1. SANITARY SEWER ON THE NORTH AND WEST; WATER AND STORM DRAIN ON THE SOUTH AND EAST.
2. MAINTAIN MINIMUM REQUIRED SEPARATION BETWEEN SANITARY SEWER AND WATER.

STANDARD UTILITY LOCATION WITHIN RIGHT-OF-WAY

N.T.S.

LEGEND:

EXISTING

- STORM DRAIN — SD
- WATER LINE — W
- SANITARY SEWER — SS
- STORM MANHOLE
- STORM CATCH BASIN
- SANITARY MANHOLE
- GAS LINE — G
- TELEPHONE LINE — T
- TELEPHONE MANHOLE
- WATER VALVE
- TV LINE — T.V.
- POWER LINE — OHL
- STREET LIGHT
- FIRE HYDRANT
- WATER METER

PROPOSED

- STORM DRAIN — SD
- STORM LATERAL
- STORM MANHOLE
- STORM CATCH BASIN
- SANITARY SEWER — SS
- SANITARY LATERAL
- SANITARY MANHOLE
- WATER LINE — W
- FIRE HYDRANT
- GATE VALVE
- WATER METER (SINGLE)
- STREET LIGHT
- PROJECT BOUNDARY

NO.	DATE	BY	REVISION COMMENTS

Design: RCR/CLM Drawn: LMB Checked: PHM Date: Initial Issue Date:

RECORD DRAWING
BY: [illegible]
DATE: 11/3/08
Permitted design drawings stamped by:
Mike A. Peebles
Engineer 16682
July 20, 1993

West Hills DEVELOPMENT
735 SW 158TH AVENUE
BEAVERTON, OR 97006

"AS BUILT DRAWING"
DATE checked BY [illegible]

AS-BUILT PLAN RE-SUBMITTAL- MAY 30, 2008

ARBOR COVE

SITE DEVELOPMENT PLAN
COMPOSITE UTILITY PLAN

otak Incorporated
17355 SW Boones Ferry Rd.
Lake Oswego, OR 97035-5217
Phone: (503) 635-3618
FAX: (503) 635-5395
Internet: www.otak.com

14165 C165C102
Project No. Drawing No.

C1.2
Sheet No.

Copyright 2007 ©

LKD: CHADM 02/29/2008 2:10pm --> L:\PROJECT\14100\14165\DWG\C165C102.DWG

Ltscale: 1
Resolved
C165X230
C165X430
C165X001
C165X190

TREE TABLE

TREE #	SPECIES	DBH (IN)
10192	DEODAR CEDAR	8
10193	DEODAR CEDAR	9
10194	DEODAR CEDAR	6
10195	COTTONWOOD	9
10196	LODGE POLE PINE	7
10197	LODGE POLE PINE	7
10365	QUAKING ASPEN	9
10366	QUAKING ASPEN	11
10367	LODGE POLE PINE	10
10368	LODGE POLE PINE	7
10378	BIRCH	6
10379	DEODAR CEDAR	12
10380	DEODAR CEDAR	7
10381	DEODAR CEDAR	11
10382	DEODAR CEDAR	7
10383	LODGE POLE PINE	10,10,12
10384	LODGE POLE PINE	12
10385	LODGE POLE PINE	11,12
10386	LODGE POLE PINE	10,13,14
10387	POPLAR	7
10388	POPLAR	7
10389	LODGE POLE PINE	15
10390	LODGE POLE PINE	11
10391	LODGE POLE PINE	9
10392	LODGE POLE PINE	18
10393	LODGE POLE PINE	9
10394	LODGE POLE PINE	13
10395	LODGE POLE PINE	16
10396	LODGE POLE PINE	11
10397	LODGE POLE PINE	20
10398	LODGE POLE PINE	11
10399	LODGE POLE PINE	10
10400	LODGE POLE PINE	11
10401	LODGE POLE PINE	13
10402	LODGE POLE PINE	12
10415	RED ALDER	6,7
10416	RED ALDER	8
10417	LODGE POLE PINE	11
10418	LODGE POLE PINE	14
10419	LODGE POLE PINE	11
10420	LODGE POLE PINE	15
10421	LODGE POLE PINE	8,11
10422	LODGE POLE PINE	9,10
10423	LODGE POLE PINE	14
10424	POPLAR	6
10425	QUAKING ASPEN	7
10490	QUAKING ASPEN	7
10491	QUAKING ASPEN	7
10492	QUAKING ASPEN	6
10493	QUAKING ASPEN	8
10506	QUAKING ASPEN	7
10657	CHERRY	7
10658	CHERRY	7
10659	LODGE POLE PINE	10
10660	LODGE POLE PINE	6
10661	LODGE POLE PINE	10
10662	LODGE POLE PINE	8
10663	LODGE POLE PINE	17
10664	LODGE POLE PINE	11
10665	LODGE POLE PINE	15
10666	LODGE POLE PINE	8
10667	LODGE POLE PINE	17
10668	LODGE POLE PINE	7,8
10669	LODGE POLE PINE	8
10670	LODGE POLE PINE	13
10671	LODGE POLE PINE	13
10672	LODGE POLE PINE	12
10673	LODGE POLE PINE	15
10674	LODGE POLE PINE	10
10675	LODGE POLE PINE	10
10676	LODGE POLE PINE	10
10677	LODGE POLE PINE	12
10678	LODGE POLE PINE	13,9
10679	LODGE POLE PINE	14
10680	LODGE POLE PINE	13
10681	LODGE POLE PINE	7
10682	LODGE POLE PINE	11
10683	LODGE POLE PINE	12,13
10684	LODGE POLE PINE	14
10685	LODGE POLE PINE	16
10686	LODGE POLE PINE	11
10687	LODGE POLE PINE	13
10688	LODGE POLE PINE	7,16
10689	LODGE POLE PINE	19
10690	LODGE POLE PINE	13
10691	LODGE POLE PINE	8,13
10692	LODGE POLE PINE	17
10693	DOUGLAS FIR	44
10694	LODGE POLE PINE	6
10695	LODGE POLE PINE	11
10696	LODGE POLE PINE	15
10697	LODGE POLE PINE	12
10698	LODGE POLE PINE	10
10699	LODGE POLE PINE	15
10700	DEODAR CEDAR	10
10701	MAPLE	7
10702	DEODAR CEDAR	7
10703	DEODAR CEDAR	9
10704	DEODAR CEDAR	6
10705	DEODAR CEDAR	6
10821	PONDEROSA PINE	14
10822	PONDEROSA PINE	14
10823	PONDEROSA PINE	15
10824	DOUGLAS FIR	16
10825	DOUGLAS FIR	18
10826	PONDEROSA PINE	17
10827	PONDEROSA PINE	12
10828	PONDEROSA PINE	15
10863	POPLAR	13,7,9,17,21,22
10864	POPLAR	39
10865	DOUGLAS FIR	25
10866	LODGE POLE PINE	6
10867	LODGE POLE PINE	6,6
10868	POPLAR	41
10869	POPLAR	31
10870	POPLAR	30
10871	POPLAR	12,33
10872	POPLAR	29
10873	DOUGLAS FIR	14
10874	DOUGLAS FIR	18
10875	DOUGLAS FIR	20
10876	POPLAR	32
10877	DOUGLAS FIR	19
10878	POPLAR	32
10879	DOUGLAS FIR	17
10880	POPLAR	33
10881	POPLAR	31
10882	POPLAR	8
10883	POPLAR	6,7
10884	POPLAR	40
10912	POPLAR	35
10913	POPLAR	24
10914	POPLAR	29
10915	POPLAR	23
10916	POPLAR	22
10917	POPLAR	26
10918	POPLAR	26
10919	POPLAR	23
10920	POPLAR	28
10921	POPLAR	28
10922	POPLAR	40
10923	POPLAR	12,23
10924	POPLAR	33
10946	POPLAR	9
10947	POPLAR	7,12
10948	DOUGLAS FIR	8
10949	DOUGLAS FIR	7

TREE TABLE

TREE #	SPECIES	DBH (IN)
10950	MADRONE	8
10951	LODGE POLE PINE	7
10952	MADRONE	7
10953	HEMLOCK	8
10954	LODGE POLE PINE	8
10955	POPLAR	7
10956	DOUGLAS FIR	7
10957	HEMLOCK	7
10958	DOUGLAS FIR	6
10959	DOUGLAS FIR	10
10960	POPLAR	26
10961	POPLAR	24
10966	LODGE POLE PINE	7
10971	LODGE POLE PINE	6
10972	LODGE POLE PINE	8
10973	DOUGLAS FIR	8
10974	DOUGLAS FIR	9
10975	PAPER BIRCH	8
10976	DOUGLAS FIR	9
10977	DOUGLAS FIR	6
10978	PAPER BIRCH	11
10986	LODGE POLE PINE	9
10991	POPLAR	35
10992	POPLAR	43
10993	POPLAR	29
11000	POPLAR	42
11005	POPLAR	39
11006	POPLAR	31
11007	POPLAR	32
11008	POPLAR	40
11020	POPLAR	6
11021	POPLAR	6
11022	POPLAR	7
11029	DOUGLAS FIR	9
11030	POPLAR	12,33
11031	POPLAR	21
11032	POPLAR	32
11033	POPLAR	24
11034	POPLAR	26
11035	POPLAR	26
11036	POPLAR	31
11046	DOUGLAS FIR	8
11068	DOUGLAS FIR	9
11069	LODGE POLE PINE	8
11070	ALDER	11
11071	LODGE POLE PINE	6,5
11072	ORNIMENTAL MAPLE	6
11073	DEODAR CEDAR	9
11074	DEODAR CEDAR	9
11075	DEODAR CEDAR	7
11076	DEODAR CEDAR	8
11077	DOUGLAS FIR	8
11422	ORNIMENTAL CHERRY	9
11423	ORNIMENTAL CHERRY	7
11424	ORNIMENTAL CHERRY	11
11425	ORNIMENTAL CHERRY	9
11426	ORNIMENTAL CHERRY	8
11427	ORNIMENTAL CHERRY	11
11428	ORNIMENTAL CHERRY	12
11429	ORNIMENTAL CHERRY	7
11430	ORNIMENTAL CHERRY	10
11431	ORNIMENTAL CHERRY	12
11432	ORNIMENTAL CHERRY	8
11433	ORNIMENTAL CHERRY	14
11434	ORNIMENTAL CHERRY	10
11435	ORNIMENTAL CHERRY	11
11518	ORNIMENTAL CHERRY	8
11519	ORNIMENTAL CHERRY	7
11520	ORNIMENTAL CHERRY	8
11521	ORNIMENTAL CHERRY	8
11522	ORNIMENTAL CHERRY	9
11523	ORNIMENTAL CHERRY	8
11524	ORNIMENTAL CHERRY	5,6
11525	ORNIMENTAL CHERRY	6
11526	ORNIMENTAL CHERRY	8
11527	ORNIMENTAL CHERRY	6
11528	ORNIMENTAL CHERRY	8
11529	ORNIMENTAL CHERRY	7
11530	ORNIMENTAL CHERRY	8
11531	ATLAS CEDAR	9
11590	ORNIMENTAL CHERRY	8
11591	ORNIMENTAL CHERRY	9

TREE TABLE

TREE #	SPECIES	DBH (IN)
11592	ORNIMENTAL CHERRY	8
11593	ORNIMENTAL CHERRY	8
11594	ORNIMENTAL CHERRY	6
11653	ORNIMENTAL CHERRY	10
11654	ORNIMENTAL CHERRY	6
11655	ORNIMENTAL CHERRY	8
11656	ORNAMENTAL CHERRY	9
11657	ORNAMENTAL CHERRY	6
11658	MAPLE	6
11847	ORNAMENTAL CHERRY	11
11848	ORNAMENTAL CHERRY	10
11849	ORNAMENTAL CHERRY	8
11850	ORNAMENTAL CHERRY	6
11851	ORNAMENTAL CHERRY	7
11852	ORNAMENTAL CHERRY	11
11853	ORNAMENTAL CHERRY	8
11854	ORNAMENTAL CHERRY	10
11855	ORNAMENTAL CHERRY	10
11973	PAPER BIRCH	6
11974	PAPER BIRCH	10
11975	PAPER BIRCH	9
11976	SYCAMORE	7,7,7,10
11977	ORNAMENTAL CHERRY	6
11978	ORNAMENTAL CHERRY	6
11979	ORNAMENTAL CHERRY	10
11980	PAPER BIRCH	5,6
11981	ORNAMENTAL CHERRY	9
11982	ORNAMENTAL CHERRY	11
11998	COTTONWOOD	36
12005	BIRCH	6
12006	BIRCH	7,9
12007	BIRCH	7,8
12035	POPLAR	16
12036	UNKNOWN DECIDUOUS	8
12037	UNKNOWN DECIDUOUS	7
12038	UNKNOWN DECIDUOUS	8
12039	LODGE POLE PINE	7
12040	LODGE POLE PINE	7
12041	LODGE POLE PINE	7
12042	LODGE POLE PINE	6
12043	LODGE POLE PINE	8
12044	LODGE POLE PINE	6
12045	LODGE POLE PINE	7
12068	POPLAR	9
12069	POPLAR	7
12070	LODGE POLE PINE	6
12071	LODGE POLE PINE	8
12072	LODGE POLE PINE	7
12073	POPLAR	6,8
12074	DOUGLAS FIR	7
12075	DOUGLAS FIR	8
12076	DOUGLAS FIR	8
12077	POPLAR	10
12078	POPLAR	13
12079	WESTERN RED CEDAR	6
12080	HEMLOCK.	9
12081	DOUGLAS FIR	10
12082	DOUGLAS FIR	31
12110	LODGE POLE PINE	8
12111	DOUGLAS FIR	8
12112	POPLAR	12
12113	POPLAR	6
12129	POPLAR	12,13
12130	PAPER BIRCH	8

TREE TABLE

TREE #	SPECIES	DBH (IN)
12131	DOUGLAS FIR	12
12132	DOUGLAS FIR	13
12133	DOUGLAS FIR	12
12134	DOUGLAS FIR	11
12135	POPLAR	12
12136	POPLAR	8
12137	POPLAR	12
12138	POPLAR	10
12139	DOUGLAS FIR	14
12141	LODGE POLE PINE	8
12142	DOUGLAS FIR	9
12143	DOUGLAS FIR	12
12144	DOUGLAS FIR	11
12147	POPLAR	6,6
12148	DOUGLAS FIR	7
12149	LODGE POLE PINE	9
12150	POPLAR	15
12151	MADRONE	10
12152	DOUGLAS FIR	11
12153	POPLAR	13,16
12154	POPLAR	7
12155	DOUGLAS FIR	9
12156	LODGE POLE PINE	10
12157	POPLAR	7
12158	POPLAR	9
12159	POPLAR	8
12160	POPLAR	8,14
12161	POPLAR	9,14,17
12162	POPLAR	6,7,7,9,8
12165	LODGE POLE PINE	8
12176	DOUGLAS FIR	13
12177	DOUGLAS FIR	6
12178	PAPER BIRCH	9,10
12179	DOUGLAS FIR	11
12180	LODGE POLE PINE	7
12181	DOUGLAS FIR	10
12182	DOUGLAS FIR	10
12183	DOUGLAS FIR	10
12184	DOUGLAS FIR	11
12188	OREGON WHITE OAK	8
12189	LODGE POLE PINE	10
12190	DOUGLAS FIR	9
12191	PAPER BIRCH	7
12192	DOUGLAS FIR	6
12193	DOUGLAS FIR	15
12194	LODGE POLE PINE	8
12195	LODGE POLE PINE	11
12196	PAPER BIRCH	7
12197	PAPER BIRCH	8
12198	PAPER BIRCH	7
12199	PAPER BIRCH	7
12200	DOUGLAS FIR	7
12201	DOUGLAS FIR	8

TREE TABLE

TREE #	SPECIES	DBH (IN)
12208	DOUGLAS FIR	10
12209	POPLAR	8
12210	WESTERN RED CEDAR	10
12219	POPLAR	20
12220	DOUGLAS FIR	14
12221	DOUGLAS FIR	11
12222	DOUGLAS FIR	8
12223	DOUGLAS FIR	13
12224	LODGE POLE PINE	10
12225	DOUGLAS FIR	7
12226	DOUGLAS FIR	13
12227	WEEPING WILLOW	11
12228	DOUGLAS FIR	11
12229	LODGE POLE PINE	8
12230	LODGE POLE PINE	9
12231	WEEPING WILLOW	7
12232	WESTERN RED CEDAR	6
12233	LODGE POLE PINE	7
12234	POPLAR	8
12235	LODGE POLE PINE	9
12236	LODGE POLE PINE	9
12239	DOUGLAS FIR	9
12240	GRAND FIR	6
12241	PAPER BIRCH	7
12242	POPLAR	9
12243	POPLAR	6
12244	POPLAR	9
12245	POPLAR	10
12246	BIG LEAF MAPLE	7
12247	BIG LEAF MAPLE	8
12263	POPLAR	23
12264	DEODAR CEDAR	7
12272	POPLAR	7
12273	POPLAR	7,9

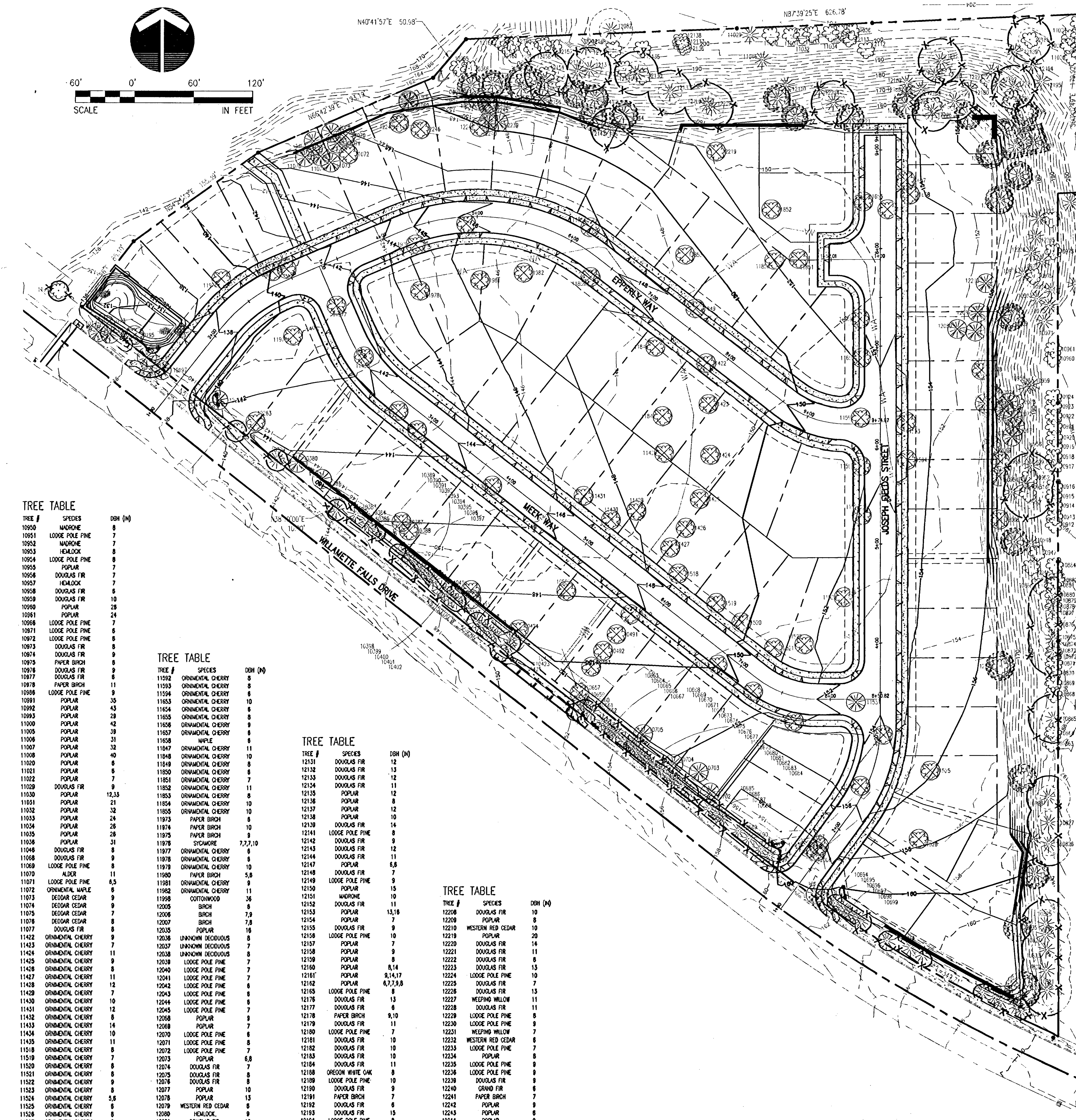

LEGEND

- EXISTING EVERGREEN TREE TO BE PRESERVED. TREE CRITICAL ROOT ZONE (1 FOOT RADIUS PER 1 INCH CALIPER).
- EXISTING DECIDUOUS TREE TO BE PRESERVED. TREE CRITICAL ROOT ZONE (1 FOOT RADIUS PER 1 INCH CALIPER).
- TREE TO BE REMOVED
- PROPOSED RETAINING WALL
- X — TREE PROTECTION FENCING (SEE DETAIL 1 ON THIS SHEET).
- 260 — PROPOSED CONTOUR, SEE GRADING PLAN.
- 260 — EXISTING CONTOUR, SEE GRADING PLAN.
- GRADING/DISTURBANCE WITHIN CRITICAL ROOT ZONE TO BE COMPLETED AFTER FIELD EVALUATION BY OWNER'S ARBORIST AND RECOMMENDATIONS FOR TREE PRESERVATION OR REMOVAL. TREE REMOVAL WILL REQUIRE APPROVAL BY CITY.
- SITE BOUNDARY

NOTES

1. PROTECT ALL TREES SHOWN TO REMAIN AND ALL TREES 1 INCH OR GREATER WITHIN THE TREE PROTECTION FENCING. TREES NOT FIELD LOCATED WITHIN THE PROPOSED DEVELOPMENT AREA AND OUTSIDE THE TREE PROTECTION ZONE ARE TO BE REMOVED.
2. CLEARING AND GRUBBING: REMOVE OBSTRUCTIONS - TREES UNDER 1 INCH CALIPER (DBH), SHRUBS, GRASS, AND ANY OTHER INVASIVE VEGETATION WITHIN THE TREE PROTECTION FENCING. REMOVAL INCLUDES DIGGING OR GRINDING OUT STUMPS AND OBSTRUCTIONS AND GRINDING OUT ROOTS. DO NOT REMOVE TREES INDICATED TO BE PRESERVED. USE ONLY HAND METHODS FOR GRUBBING WITHIN DRIP LINE OF TREES TO BE PRESERVED. ALL OPEN SPACE AND TRAIL CORRIDORS, INCLUDING ALL DISTURBED AREAS, THAT WILL BE CITY MAINTAINED PROPERTY SHALL BE SEEDED WITH "PRO-TIME" COMPANION SEED MIX BY HOBBS & HOPKINS LTD., AT A RATE OF 15-30 LBS. PER ACRE (503-239-7518).
3. FOLLOWING CLEARING, GRUBBING AND SEEDING:
   A. NO PERSON MAY CONDUCT ANY ACTIVITY WITHIN THE TREE PROTECTION FENCING, INCLUDING, BUT NOT LIMITED TO, PARKING EQUIPMENT, PLACING SOLVENTS, STORING BUILDING MATERIAL AND SOIL DEPOSITS, DUMPING CONCRETE WASHOUT AND LOCATING BURN HOLES.
   B. NO ACTIVITY ALLOWED IN PROTECTED AREAS.
   C. DURING CONSTRUCTION, NO PERSON SHALL ATTACH ANY OBJECT TO ANY TREE DESIGNATED FOR PRESERVATION.
   D. MAINTAIN TREES THROUGHOUT CONSTRUCTION PERIOD BY WATERING AND FERTILIZING.
   E. MAINTAIN THE PROTECTIVE BARRIERS IN PLACE UNTIL THE CITY AUTHORIZES THEIR REMOVAL BASED ON THE RECOMMENDATION OF THE OWNER'S ARBORIST OR A FINAL CERTIFICATE OF OCCUPANCY IS ISSUED, WHICHEVER OCCURS FIRST.
   F. ANY LANDSCAPING DONE IN THE PROTECTED ZONE SUBSEQUENT TO THE REMOVAL OF THE BARRIERS SHALL BE ACCOMPLISHED WITH LIGHT MACHINERY OR HAND LABOR.
   G. TREES TO BE RETAINED SHALL BE PROTECTED FROM EROSION AND SEDIMENTATION. CLEARING OPERATIONS SHALL BE CONDUCTED SO AS TO EXPOSE THE SMALLEST PRACTICAL AREA OF SOIL TO EROSION FOR THE LEAST POSSIBLE TIME.
   H. PRUNE PROTECTED TREES AS REQUIRED TO AVOID DAMAGE FROM CONSTRUCTION. PRIOR TO ANY PROPOSED PRUNING CONTACT AND COORDINATE WITH THE OWNER'S ARBORIST. PRUNE PURSUANT TO NATIONAL ARBORIST ASSOCIATION STANDARDS.

FENCE SHALL BE LOCATED AT THE OUTER PERIMETER OF THE CRITICAL ROOT ZONE OF ALL TREES TO BE PROTECTED AS SHOWN ON THE SITE PLAN UNLESS OTHERWISE AUTHORIZED BY THE CITY.

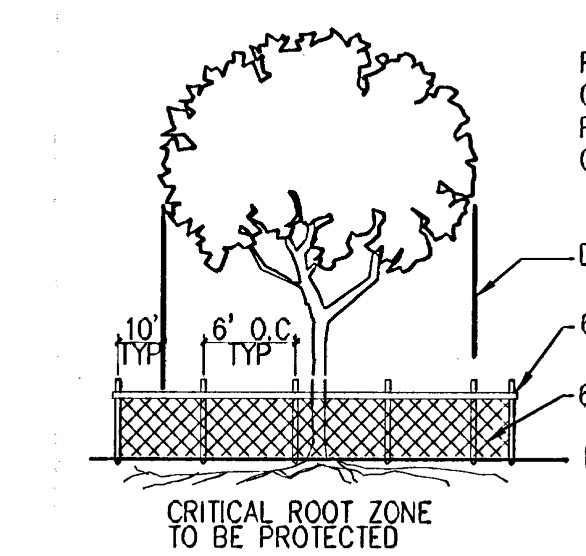

NOTE: EXISTING TREES TO REMAIN - PROTECT WITH 6' CHAIN LINK FENCING AROUND DRIPLINE DURING CONSTRUCTION (NEITHER TOP SOIL STORAGE NOR CONSTRUCTION MATERIAL SHALL BE LOCATED WITHIN THE DRIPLINE OF TREE. FENCES SHALL BE IN PLACE PRIOR TO BEGINNING CONSTRUCTION, AND SHALL CONTINUE THROUGH PROJECT COMPLETION.

TREE PROTECTION: DETAIL 1

AS-BUILT PLAN RE-SUBMITTAL- MAY 30, 2008

ARBOR COVE

SITE DEVELOPMENT PLAN
TREE PRESERVATION PLAN

"AS BUILT DRAWING"
DATE / BY

NO. | DATE | BY | REVISION COMMENTS
Design | Drawn | Checked | Date | Initial Issue Date:
RDR/CLM | LMB | PHM

RECORD DRAWING
BY:
DATE:
Permitted design drawings stamped by: Mike A. Peebles Engineer 16682 July 20, 1993

West Hills DEVELOPMENT
735 SW 158th AVENUE
BEAVERTON, OR 97006

otak Incorporated
17355 SW Boones Ferry Rd.
Lake Oswego, OR 97035-5217
Phone: (503) 635-3618
FAX: (503) 635-5395
Internet: www.otak.com

14165 | C165C103
Project No. | Drawing No.

C1.3
Sheet No.

Copyright 2007 ©

LKO: SARAHN 02/29/2008 10:34am ---> L:\PROJECT\14100\14165\DWG\C165C103.DWG

XREF LIST
Ltscale: 60

Resolved
C165X001
C165X190
C165X230
C165X600
C165X430
C165X010

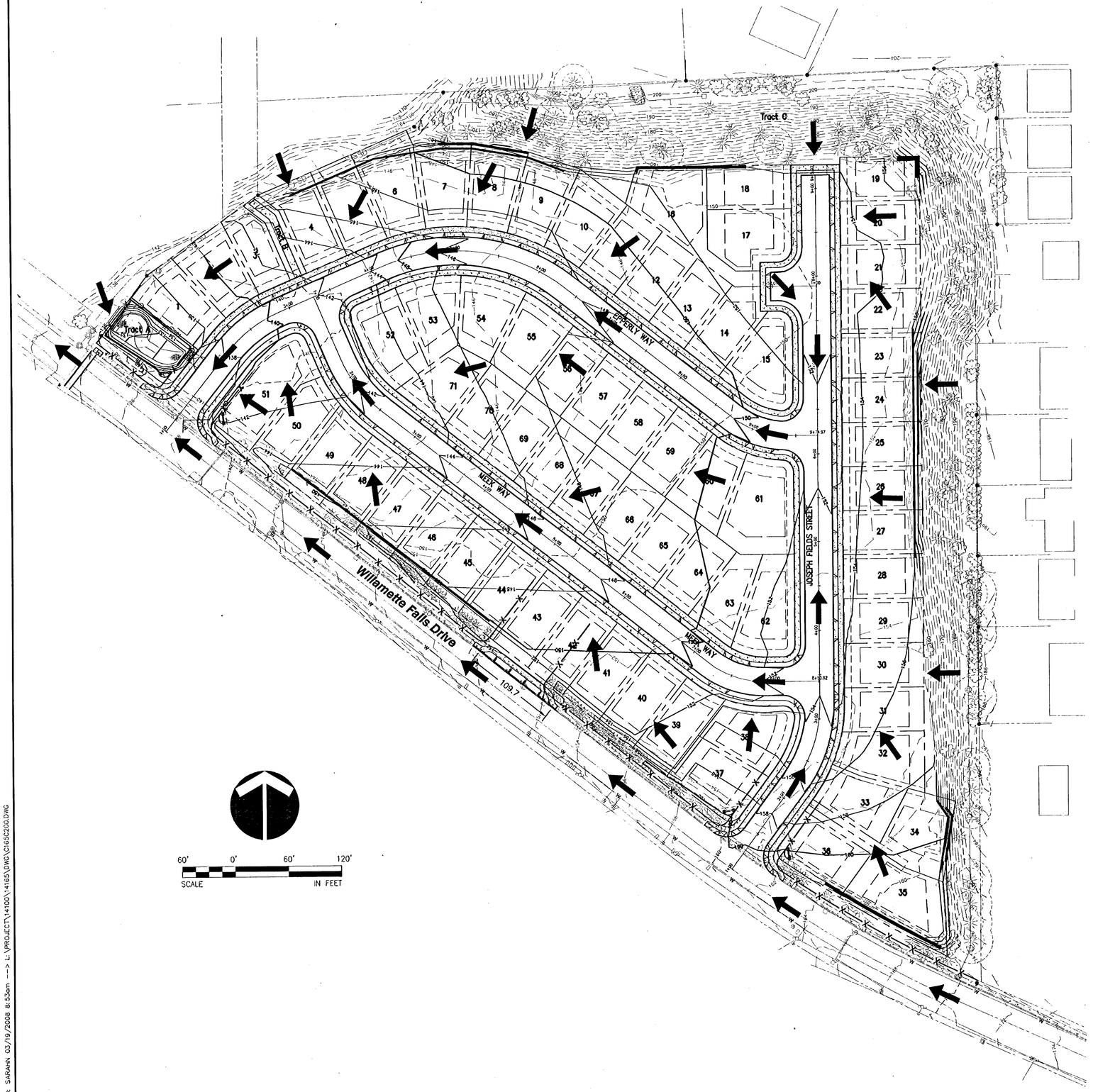

GRADING NARRATIVE:

THE ARBOR COVE SUBDIVISION IS A 71 LOT SINGLE FAMILY RESIDENTIAL SUBDIVISION LOCATED NORTH OF WILLAMETTE FALLS DRIVE.

GRADING WORK WILL CONSIST OF THE FOLLOWING:

1) STRIPPING OF EXISTING GROUND (ORGANIC MATERIAL, APPROXIMATELY 4"-6" THICK) WITH DISPOSAL OFF-SITE AND SOME STOCKPILING OF STRIPPINGS ON SITE FOR FUTURE PLACEMENT IN LANDSCAPE/NON-STRUCTURAL AREAS.

2) MASS EXCAVATION/EMBANKMENT OF ON-SITE MATERIALS AND IMPORT OF SELECT MATERIAL IS REQUIRED FOR CONSTRUCTION OF PUBLIC STREETS/UTILITIES AND FOR LOT GRADING OF BUILDING PADS.

3) RETAINING WALLS ARE LOCATED IN THE REAR YARDS OF SOME LOTS. WALLS TO BE PERMITTED AND CONSTRUCTED UNDER SEPARATE PERMIT.

4) TRENCH EXCAVATION MATERIAL WILL BE USED FOR ON-SITE FILLS AND/OR HAULED OFF-SITE, DEPENDENT ON QUALITY OF TRENCH MATERIAL AND TIMING OF CONSTRUCTION.

5) STANDARD CONSTRUCTION PRACTICES WILL BE USED FOR THE EXCAVATION/EMBANKMENT OF MATERIALS AND A GEOTECHNICAL ENGINEER/TESTING FIRM WILL BE ON-SITE TO PROVIDE COMPACTION TESTING AND FIELD RECOMMENDATIONS.

6) CONTRACTOR SHALL PROVIDE INLET PROTECTION FOR ALL CATCH BASINS ALONG WILLAMETTE FALLS DRIVE.

GRADING LEGEND:

270	EXISITING 10' CONTOUR
268	EXISTING 2' CONTOUR
270	PROPOSED 10' CONTOUR
268	PROPOSED 2' CONTOUR
	PROPOSED RETAINING WALL
X	PROPOSED SEDIMENT FENCE
	DRAINAGE ARROW
	INLET PROTECTION
	TREES TO REMAIN

NO.	DATE	BY	REVISION COMMENTS

	Date	Initial	Issue Date:
Design		RCR/CJM	
Drawn		LMB	
Checked		PHM	

RECORD DRAWING
BY: [illegible]
DATE: 6/3/08
Permitted design drawings stamped by:
Mike A. Peebles
Engineer 16682
July 20, 1993

West Hills DEVELOPMENT
735 SW 158TH AVENUE
BEAVERTON, OR 97006

"AS BUILT" DRAWING
DATE 6/3/08 BY [illegible]

AS-BUILT PLAN RE-SUBMITTAL- MAY 30, 2008

ARBOR COVE

GRADING PLAN
OVERALL SITE

otak Incorporated

17355 SW Boones Ferry Rd.
Lake Oswego, OR 97035-5217
Phone: (503) 635-3618
FAX: (503) 635-5395
Internet: www.otak.com

14165 C165C200
Project No. Drawing No.

C2.0
Sheet No.

Copyright 2007 ©

LKO: SARAHN 03/19/2008 8:53am --> L:\PROJECT\14100\14165\DWG\C165C200.DWG

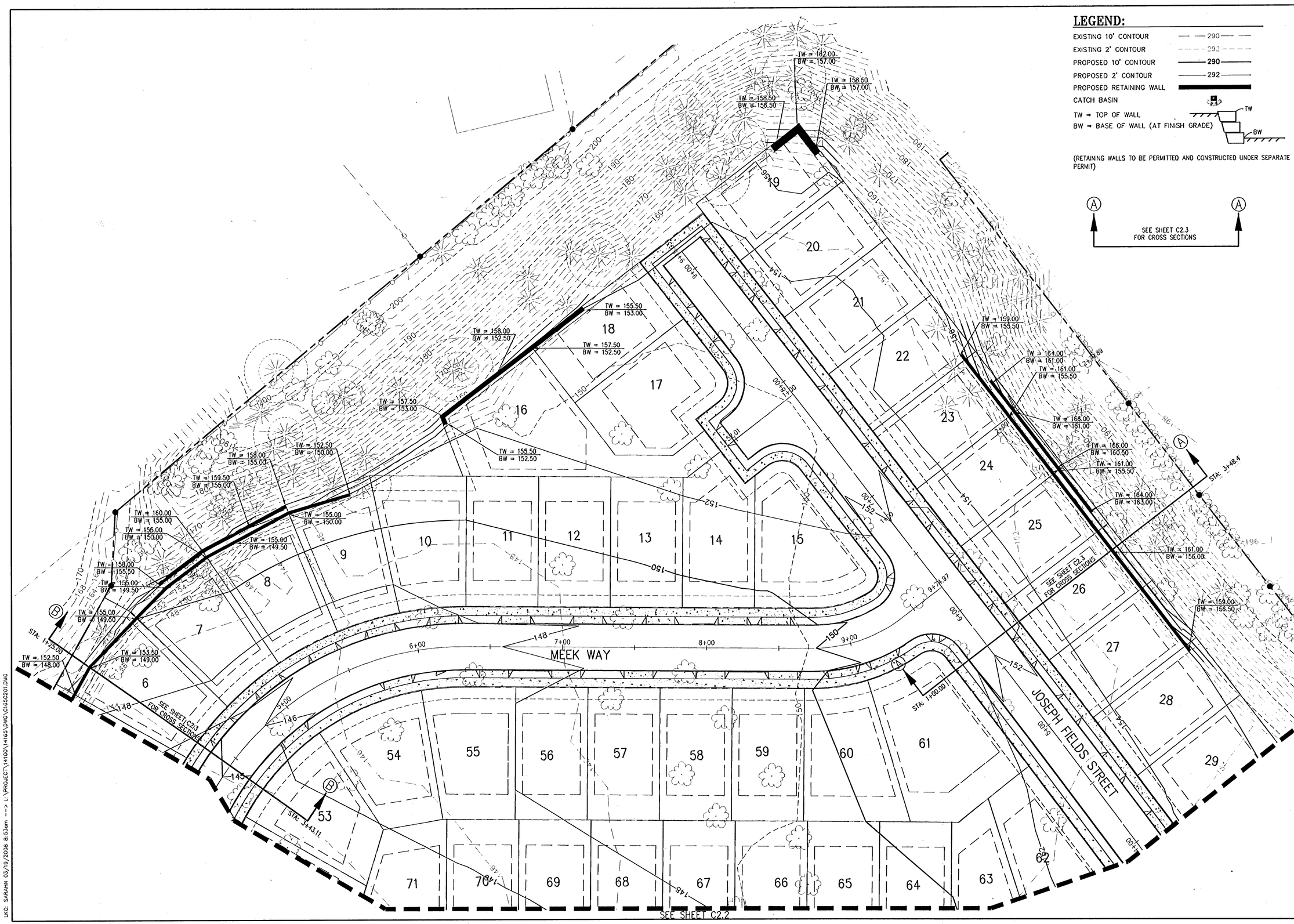

LEGEND:

EXISTING 10' CONTOUR	290
EXISTING 2' CONTOUR	292
PROPOSED 10' CONTOUR	290
PROPOSED 2' CONTOUR	292
PROPOSED RETAINING WALL	
CATCH BASIN	
TW = TOP OF WALL	TW
BW = BASE OF WALL (AT FINISH GRADE)	BW

(RETAINING WALLS TO BE PERMITTED AND CONSTRUCTED UNDER SEPARATE PERMIT)

A — A

SEE SHEET C2.3 FOR CROSS SECTIONS

NO.	DATE	BY	REVISION COMMENTS	Date	Initial	Issue Date:

Design RCR/CLM
Drawn LMB
Checked PHM

RECORD DRAWING
BY: [illegible]
DATE: 6/3/08
Permitted design drawings stamped by:
Mike A. Peebles
Engineer 16682
July 20, 1993

West Hills DEVELOPMENT
735 SW 158TH AVENUE
BEAVERTON, OR 97006

"AS BUILT" DRAWING
BY [illegible]
DATE 6/3/08

AS-BUILT PLAN RE-SUBMITTAL- MAY 30, 2008

ARBOR COVE

GRADING PLAN
NORTH

otak Incorporated
17355 SW Boones Ferry Rd.
Lake Oswego, OR 97035-5217
Phone: (503) 635-3618
FAX: (503) 635-5395
Internet: www.otak.com

14165 C165C201
Project No. Drawing No.

C2.1
Sheet No.

Copyright 2007 ©

LKO: SARAHN 03/19/2008 8:53am --> L:\PROJECT\14100\14165\DWG\C165C201.DWG

XREF LIST
Ltscale: 1
Resolved
C165X001
C165X230
C165X430
C165X600
C165X190

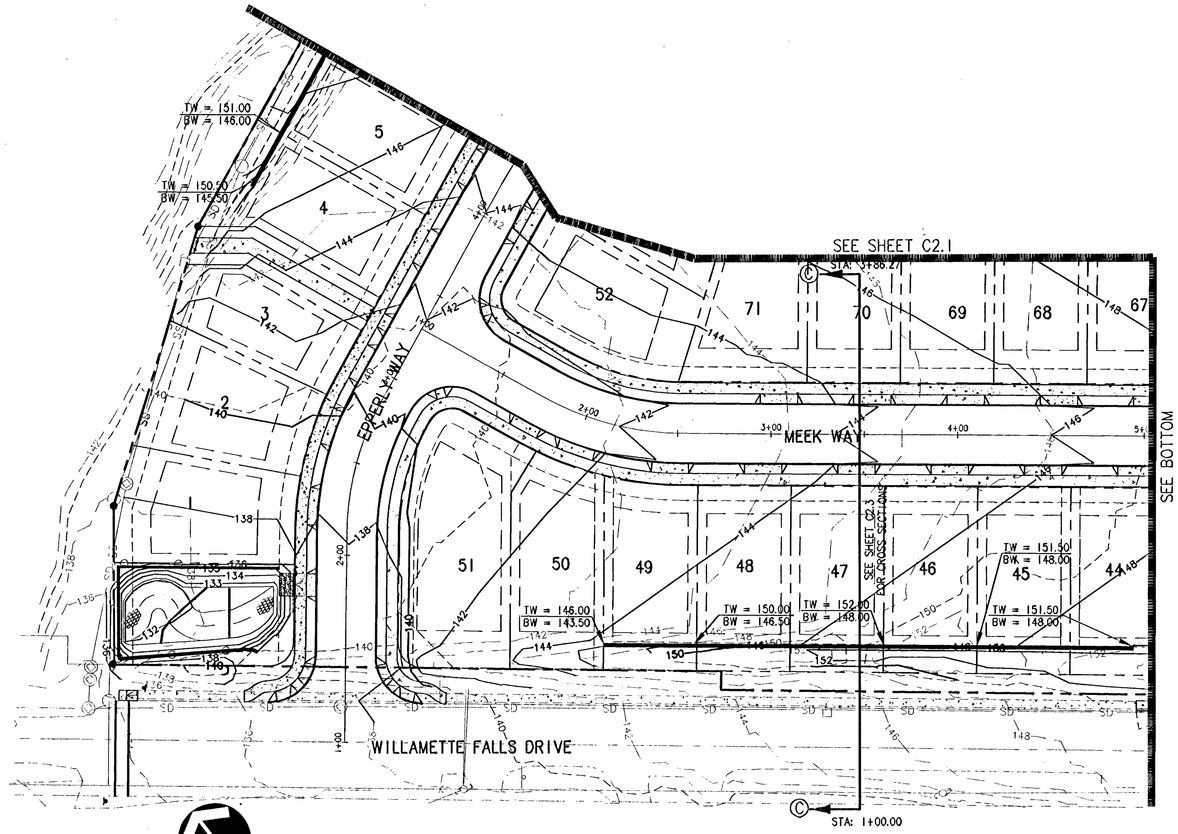

LEGEND:

EXISTING 10' CONTOUR	290
EXISTING 2' CONTOUR	292
PROPOSED 10' CONTOUR	290
PROPOSED 2' CONTOUR	292
PROPOSED RETAINING WALL	
CATCH BASIN	
TW = TOP OF WALL	
BW = BASE OF WALL (AT FINISH GRADE)	

(RETAINING WALLS TO BE PERMITTED AND CONSTRUCTED UNDER SEPARATE PERMIT)

SEE SHEET C2.3
FOR CROSS SECTIONS

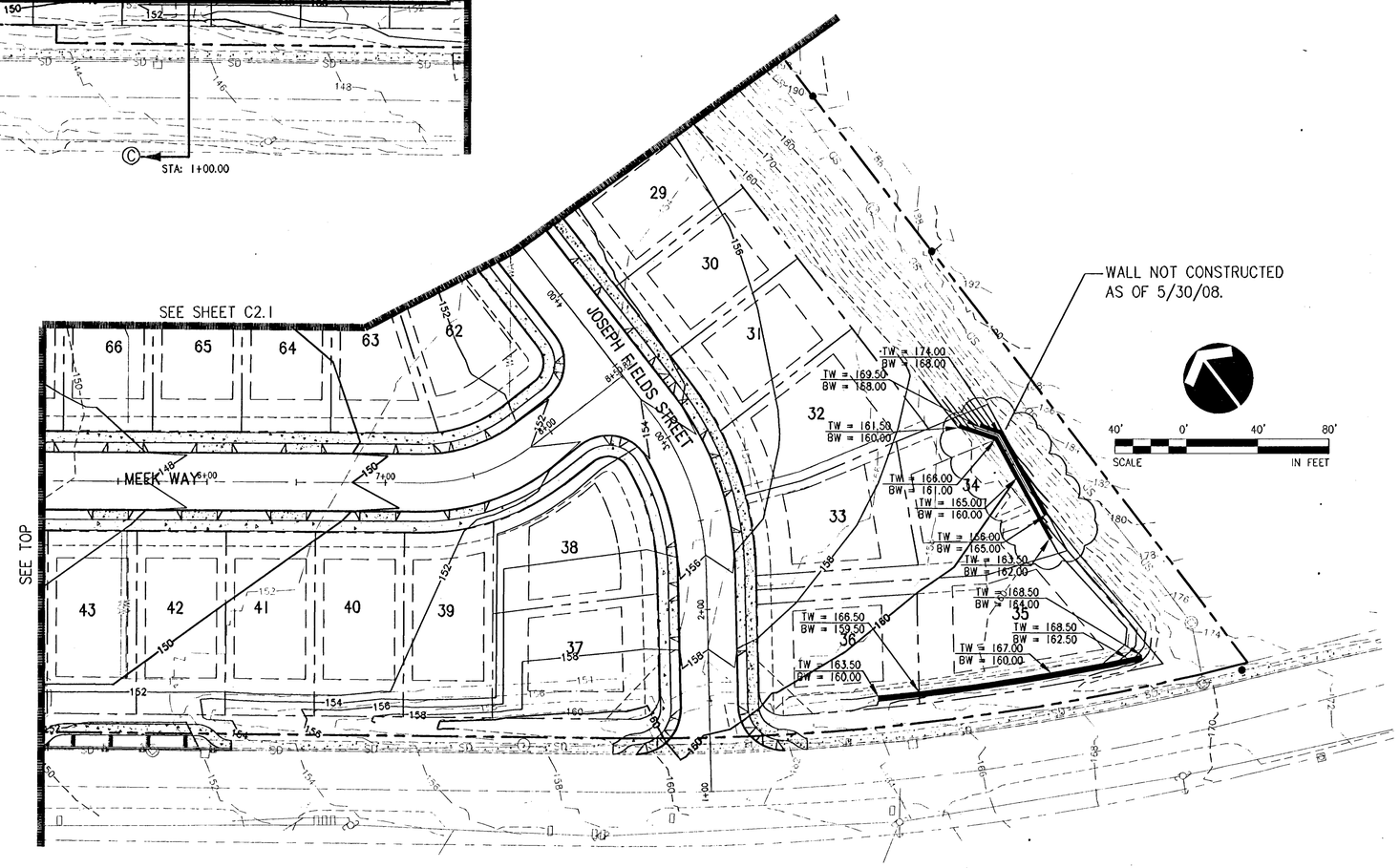

NO.	DATE	BY	REVISION COMMENTS

		Date	Initial issue Date:
Design	Drawn	Checked	
ROR/CLM	LMB	PHM	

RECORD DRAWING
BY: [illegible]
DATE: 12/3/08
Permitted design drawings stamped by:
Mike A. Peebles
Engineer 16682
July 20, 1993

West Hills
DEVELOPMENT
12725 SW MILLIKAN WAY
BEAVERTON, OR 97005

"AS BUILT DRAWING"
DATE [illegible] BY [illegible]

AS-BUILT PLAN RE-SUBMITTAL- MAY 30, 2008

ARBOR COVE

GRADING PLAN
SOUTH

otak
Incorporated
17355 SW Boones Ferry Rd.
Lake Oswego, OR 97035-5217
Phone: (503) 635-3618
FAX: (503) 635-5395
Internet: www.otak.com

14165 C165C202
Project No. Drawing No.

C2.2
Sheet No.

Copyright 2007 ©

LKO: CHADM 06/02/2008 12:06am --> L:\PROJECT\14100\14165\DWG\C165C202.DWG

XREF LIST
Ltscale: 40
Resolved
C165X001
C165X230
C165X430
C165X600
C165X940

SEE SHEETS C2.1, C2.2 FOR SECTION LOCATIONS

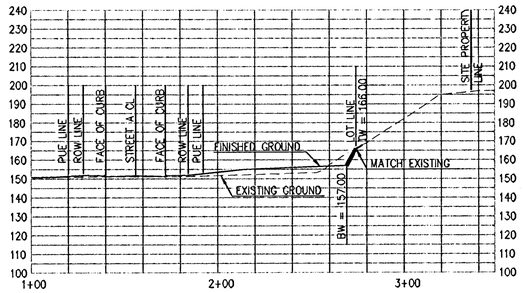

SECTION A-A

SCALE: HORIZ. 1" = 40'
VERT. 1" = 40'

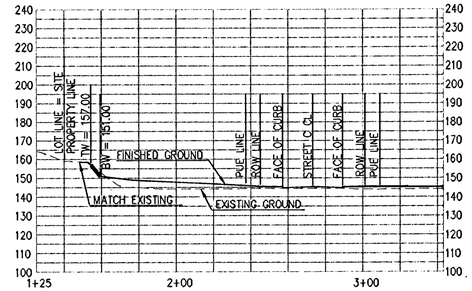

SECTION B-B

SCALE: HORIZ. 1" = 40'
VERT. 1" = 40'

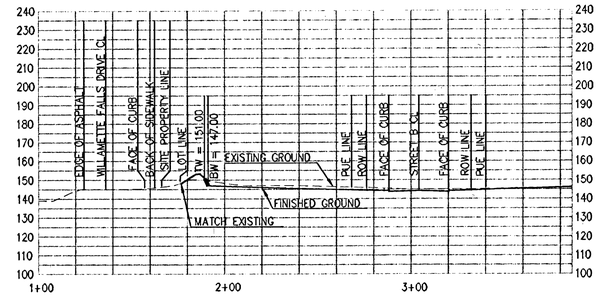

SECTION C-C

SCALE: HORIZ. 1" = 40'
VERT. 1" = 40'

AS-BUILT PLAN RE-SUBMITTAL- MAY 30, 2008

NO.	DATE	BY	REVISION COMMENTS

Design	RCR/CLM	Drawn	LMB
Checked	PHM	Date	
Initial Issue Date:			

RECORD DRAWING
BY: [signature]
DATE: 6/3/08
Permitted design drawings stamped by:
Mike A. Peebles
Engineer 16682
July 20, 1993

West Hills DEVELOPMENT
12725 SW GLENHAVEN
BEAVERTON, OR 97008

"AS BUILT DRAWING"
DATE 6/3/08 BY [signature]

ARBOR COVE

GRADING PLAN
SITE CROSS SECTIONS AND
RETAINING WALL DETAILS

otak Incorporated

17355 SW Boones Perry Rd.
Lake Oswego, OR 97035-5217
Phone: (503) 635-3618
FAX: (503) 635-5395
Internet: www.otak.com

14165 C165C203
Project No. Drawing No.

C2.3
Sheet No.

Copyright 2007 ©

LKG: SARAHN 02/29/2008 10:34am --> L:\PROJECT\14100\14165\DWG\C165C203.DWG

XREF LIST
Ltscale: 60
Resolved
C165X001
C165X190
C165X230
C165X010
C165X600

60' 0' 60' 120'
SCALE IN FEET

LEGEND:

EXISTING

- STORM DRAIN
- WATER LINE
- SANITARY SEWER
- STORM MANHOLE
- STORM CATCH BASIN
- SANITARY MANHOLE
- GAS LINE
- TELEPHONE LINE
- TELEPHONE MANHOLE
- WATER VALVE
- TV LINE
- POWER LINE
- STREET LIGHT
- FIRE HYDRANT
- WATER METER

PROPOSED

- STORM DRAIN
- STORM LATERAL
- STORM MANHOLE
- STORM CATCH BASIN
- SANITARY SEWER
- SANITARY LATERAL
- SANITARY MANHOLE
- WATER LINE
- FIRE HYDRANT
- GATE VALVE
- WATER METER (SINGLE)
- STREET LIGHT
- PROJECT BOUNDARY

NO.	DATE	BY	REVISION COMMENTS

Design RCR/CLM Drawn LMB Checked PHM Date Initial Issue Date:

RECORD DRAWING
BY: MMCM
DATE: 6/3/08
Permitted design drawings stamped by:
Mike A. Peebles
Engineer 16682
July 20, 1993

West Hills DEVELOPMENT
735 SW 158TH AVENUE
BEAVERTON OR 97006

"AS BUILT DRAWING"
BY LMB
DATE 6/3/08

AS-BUILT PLAN RE-SUBMITTAL- MAY 30, 2008

ARBOR COVE

STREET AND STORM DRAIN PLAN
COMPOSITE UTILITY PLAN

otak Incorporated
17355 SW Boones Ferry Rd.
Lake Oswego, OR 97035-5217
Phone: (503) 635-3618
FAX: (503) 635-5395
Internet: www.otak.com

14165 C165C300C
Project No. Drawing No.
C3.0C
Sheet No.

Copyright 2007 ©

LKO: CHADM 02/29/2008 2:23pm --> L:\PROJECT\14100\14165\DWG\C165C300C.DWG

XREF LIST
Ltscale: 40
Resolved
C165X001
C165X230
C165X600
O165X190
C165X900
C165X950

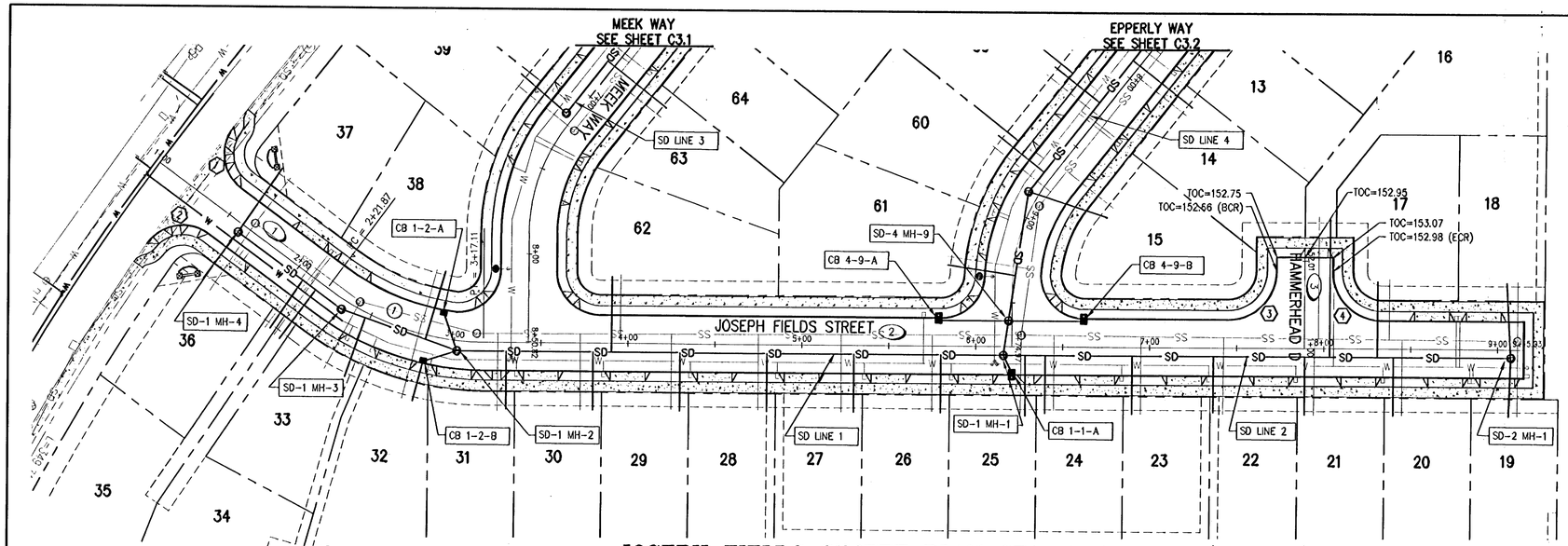

JOSEPH FIELDS STREET PLAN STA: 1+00-END (PUBLIC)
SCALE: HORIZ. 1" = 40'
(PUBLIC SD-1 AND SD-2)

40' 0' 40' 80'
SCALE IN FEET

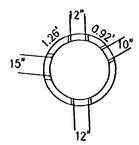

SD-1 MH-1(48")
SCALE: 1" = 5'

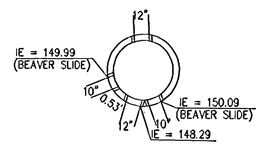

SD-1 MH-2(48")
SCALE: 1" = 5'

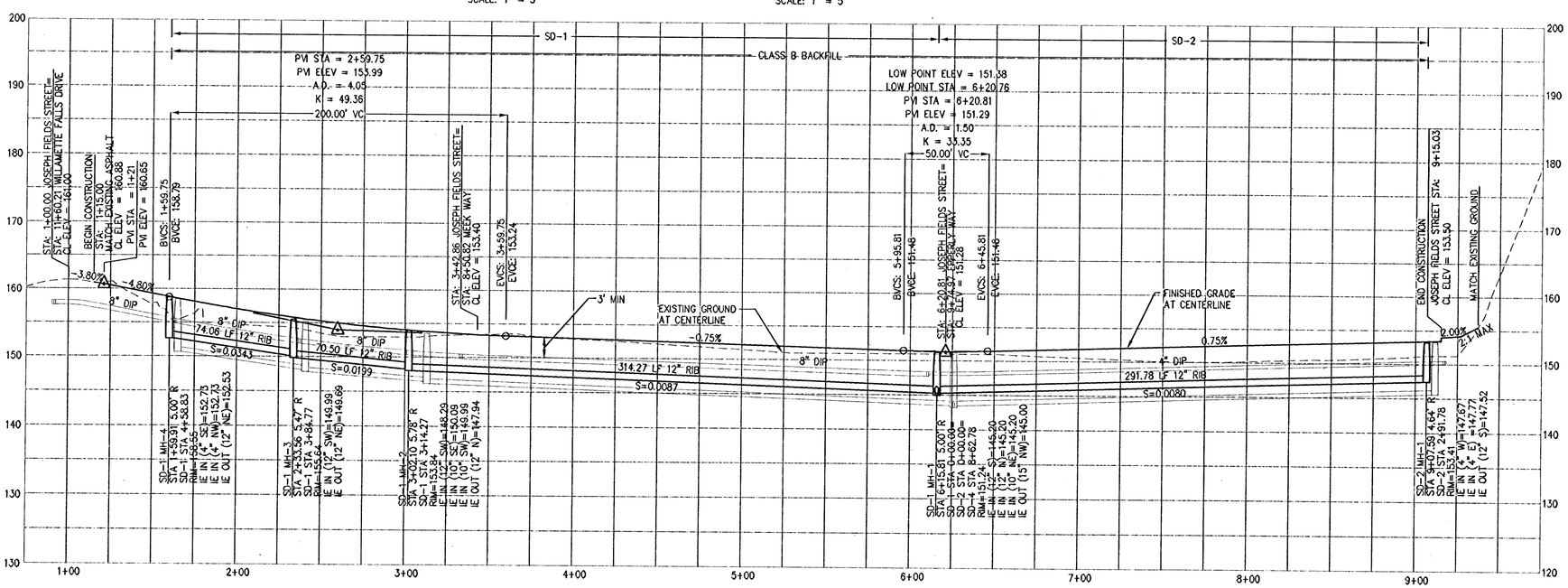

JOSEPH FIELDS STREET PROFILE STA: 1+00-END (PUBLIC)
SCALE: HORIZ. 1" = 40'
VERT. 1" = 10'
(PUBLIC SD-1 AND SD-2)

CENTER LINE DATA

No.	LENGTH	BEARING
1	121.87'	N36°09'11"E
2	597.92'	N00°13'32"W
3	52.01'	S89°46'28"W

CENTERLINE CURVE DATA

No.	RADIUS	LENGTH	TANGENT	DELTA
1	150	95.24	49.29	36°22'43"

CURB RETURN CURVE DATA

NO.	DESCRIPTION	OFFSET	T.O.C. ELEV.	CURVE
1	JOSEPH FIELDS STREET BCR = 1+46.39 1/4 ? 1/2 ? HP 3/4 ? ECR = 1+21.75 JOSEPH FIELDS STREET	16.00 L 41.68 L	EL = 159.43 EL = 159.79 EL = 159.90 EL = 159.81 EL = 159.52	Δ = 91°34'34" R = 25.00 T = 25.70 L = 39.96
2	JOSEPH FIELDS STREET BCR = 1+21.95 1/4 ? 1/2 ? 3/4 ? ECR = 1+46.94 JOSEPH FIELDS STREET	41.68 R 16.00 R	EL = 161.76 EL = 161.40 EL = 160.75 EL = 160.02 EL = 159.41	Δ = 91°33'43" R = 25.00 T = 25.69 L = 39.95
3	HAMMERHEAD D BCR = BCR 1/4 ? 1/2 ? 3/4 ? ECR = ECR JOSEPH FIELDS STREET	16.00 L 16.00 L	EL = 152.66 EL = 152.54 EL = 152.42 EL = 152.31 EL = 152.22	Δ = 90°00'00" R = 28.00 T = 28.00 L = 43.98
4	JOSEPH FIELDS STREET BCR = 8+32.80 1/4 ? 1/2 ? 3/4 ? ECR = 1+44 HAMMERHEAD D	16.00 L 16.00 R	EL = 152.88 EL = 152.91 EL = 152.93 EL = 152.96 EL = 152.98	Δ = 90°00'00" R = 28.00 T = 28.00 L = 43.98

INSTALL CURB RAMP AT CURB RETURN PER WEST LINN DETAIL WL-507A, SHEET C6.0.

STORM LATERAL INSTALLATION CHART

LOT	SD STATION	SD LINE	LENGTH	I.E. @ MAIN	I.E. @ END	SLOPE
16	1+87.54	2	78.68	147.03	148.74	0.0217
17	2+14.98	2	43.00	147.25	150.28	0.0704
18	2+91.78	2	43.00	147.67	150.30	0.0612
19	2+91.78	2	33.44	147.77	148.34	0.0170
20	2+24.21	2	33.24	147.33	147.74	0.0124
21	1+73.21	2	33.00	146.92	148.08	0.0352
22	1+20.89	2	32.12	146.50	147.50	0.0311
23	0+74.21	2	33.00	146.13	147.42	0.0392
24	0+24.21	2	33.00	145.73	147.29	0.0474
25	0+12.69	2	34.43	145.63	147.02	0.0402
26	0+35.79	1	33.00	145.84	147.64	0.0544
27	0+85.79	1	33.00	146.28	150.18	0.1182
28	1+35.79	1	33.00	146.71	148.07	0.0411
29	1+85.79	1	33.00	147.15	151.15	0.1212
30	2+35.79	1	33.00	147.58	149.06	0.0447
31	2+85.79	1	33.01	148.02	151.98	0.1200
32	CB 1-2-B	1	23.32	150.63	151.22	0.0253
33	3+70.24	1	35.26	149.74	151.53	0.0508
34	4+03.23	1	34.52	150.96	152.54	0.0459
35	4+12.43	1	33.02	151.27	152.71	0.0435
36	4+58.83	1	33.00	152.73	153.69	0.0291
37	4+58.83	1	44.46	152.73	155.62	0.0650
38	3+33.53	1	40.61	149.01	150.58	0.0387
62	2+25.25	1	43.00	147.49	150.49	0.0697

ALL STORM DRAIN LATERALS SHALL BE 4" DIAMETER 3034 SDR35 PIPE UNLESS OTHERWISE NOTED AS C900.

MINIMUM LATERAL SLOPE OF 0.020 FT/FT

CATCH BASIN DATA

NO./ TYPE	STR. STA./ OFFSET	ELEVATION AT TOC	PIPE OUT INVERT	PIPE OUT SIZE/ LENGTH	PIPE OUT SLOPE
1-1-A CCI	JOSEPH FIELDS 6+20.76 16.00' R	151.37	145.57	10" 10.89	0.0340
4-9-A CCI	JOSEPH FIELDS 5+78.53 16.00' L	151.61	145.11	10" 40.17	0.0105
4-9-B CCI	JOSEPH FIELDS 6+61.96 16.00' L	151.56	145.16	10" 43.26	0.0120
1-2-A G-1	JOSEPH FIELDS 2+91.34 16.00' L	154.19	150.46	10" 22.97	0.0161
1-2-B G-1	JOSEPH FIELDS 2+85.06 16.00' R	154.36	N=150.63 OUT=150.43	10" 20.25	0.0217

CATCH BASIN NOTES:

1. FOR COMBINATION CURB INLET (CCI) AND TYPE G-1 CATCH BASIN DETAILS REFER TO SHEET C6.1, DETAILS WL-601 AND WL-602 RESPECTIVELY
2. STREET STATIONING & OFFSET GIVEN AT MIDPOINT OF CATCH BASIN @ TOP OF FACE OF CURB.
3. ALL CATCH BASIN LEADS SHALL BE RIB F794 PIPE UNLESS OTHERWISE NOTED AS C900.

NO.	DATE	BY	REVISION COMMENTS

Design | Drawn | Checked | Date | Initial issue Date:
RCR/CJM | LMB | PHM

RECORD DRAWING
BY: MWC
DATE: 6/3/08
Permitted design drawings stamped by:
Mike A. Peebles
Engineer 16682
July 20, 1993

West Hills DEVELOPMENT
735 SW 158TH AVENUE
BEAVERTON, OR 97006

"AS BUILT DRAWING"
BY MWC
DATE 6/3/08

AS-BUILT PLAN RE-SUBMITTAL- MAY 30, 2008

ARBOR COVE
STREET AND STORM DRAIN PLAN & PROFILE
JOSEPH FIELDS: STA 1+00 TO END

otak Incorporated
17355 SW Boones Ferry Rd.
Lake Oswego, OR 97035-5217
Phone: (503) 635-3618
FAX: (503) 635-5395
Internet: www.otak.com

14165 C165C300
Project No. Drawing No.
C3.0
Sheet No.

Copyright 2007 ©

LKO: CHADM 02/29/2008 2:40pm --> L:\PROJECT\14100\14165\DWG\C165C300.DWG

XREF LIST
Ltscale: 30
Resolved
C165X001
C165X230
C165X600
0165X190
C165X900
C165X950
C165X010

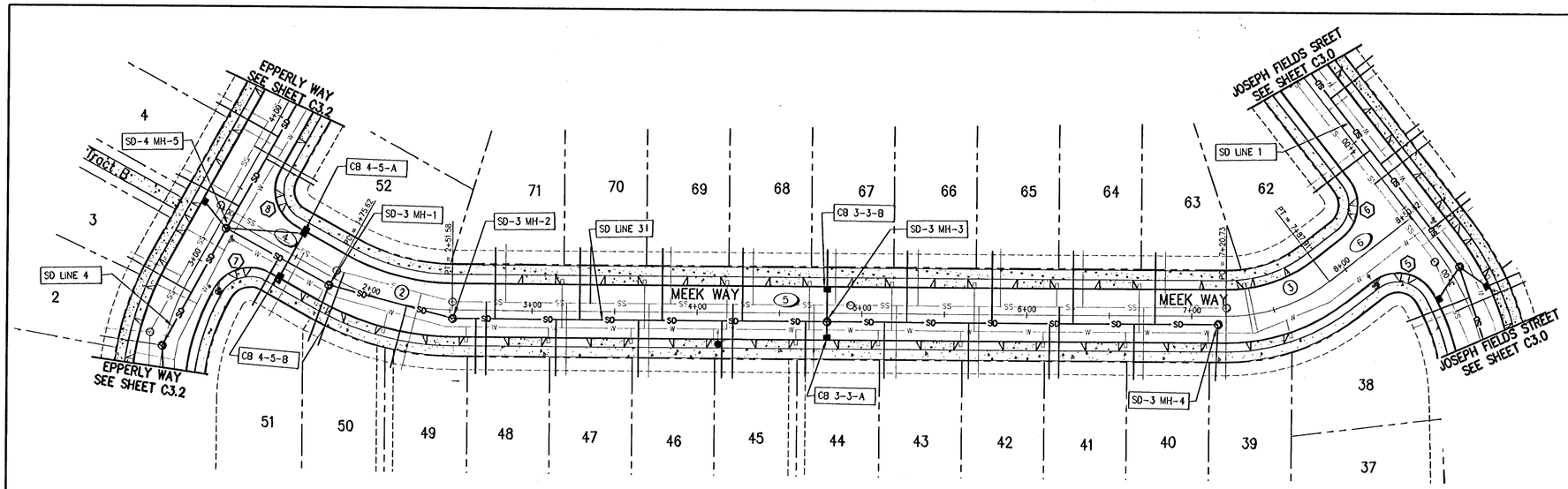

MEEK WAY PLAN STA: 1+00-8+50.82 (PUBLIC)
SCALE: HORIZ. 1" = 40'
(PUBLIC SD-3)

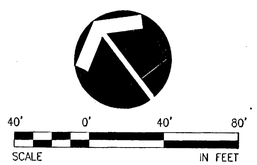

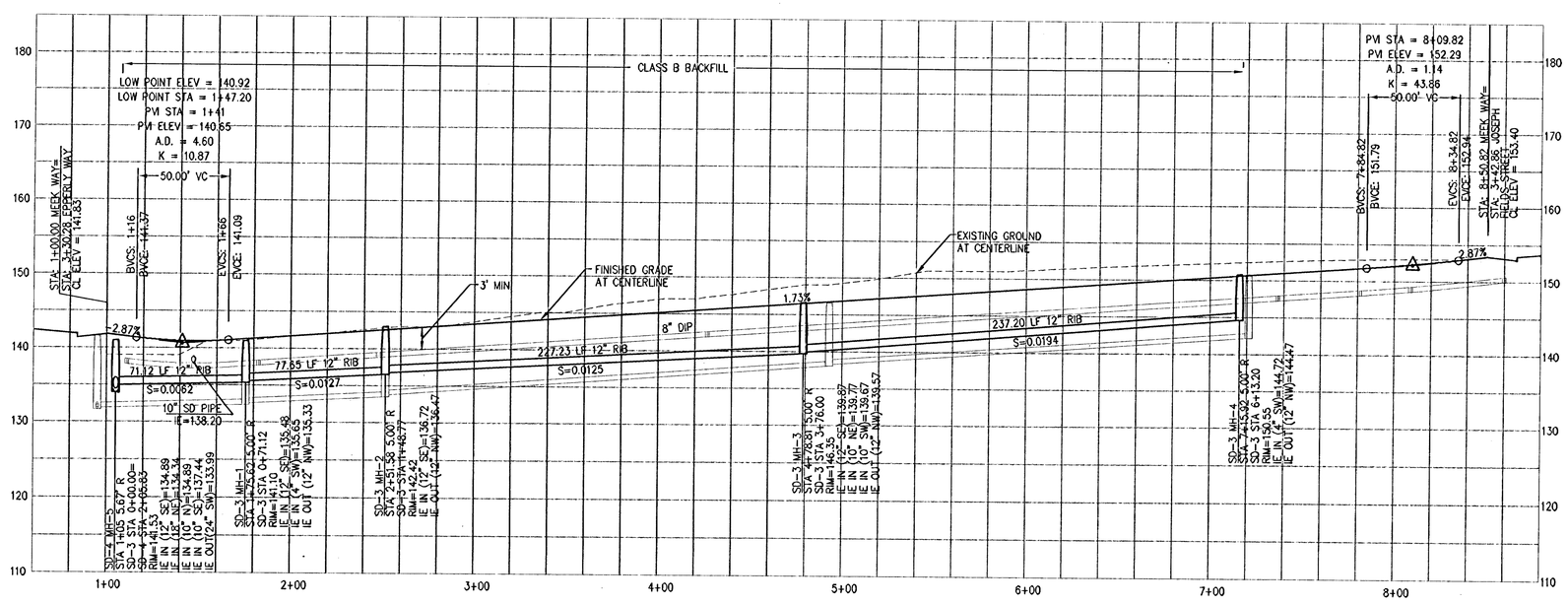

MEEK WAY PROFILE STA: 1+00-8+50.82 (PUBLIC)
SCALE: HORIZ. 1" = 40'
VERT. 1" = 10'
(PUBLIC SD-3)

CENTER LINE DATA

No.	LENGTH	BEARING
4	75.62'	S23°17'48"E
5	469.16'	S25°07'09"E
6	62.91'	S89°46'28"W

CENTERLINE CURVE DATA

No.	RADIUS	LENGTH	TANGENT	DELTA
2	151	75.96	38.80	28°49'21"
3	101	67.17	34.88	38°06'23"

CURB RETURN CURVE DATA

NO.	DESCRIPTION	OFFSET	T.O.C. ELEV.	CURVE
5	MEEK WAY BCR = 8+08.75 1/4 ? 1/2 ? 3/4 ? ECR = 2+96.06 JOSEPH FIELDS STREET	16.00 R 16.00 L	EL = 152.27 EL = 152.62 EL = 153.16 EL = 153.72 EL = 154.13	Δ = 98°02'34" R = 25.00 T = 28.78 L = 42.78
6	JOSEPH FIELDS STREET BCR = 3+83.86 1/4 ? 1/2 ? 3/4 ? ECR = 8+09.82 MEEK WAY	16.00 L 16.00 L	EL = 153.06 EL = 153.01 EL = 152.80 EL = 152.52 EL = 152.29	Δ = 90°00'00" R = 25.00 T = 25.00 L = 39.27
7	EPPERLY WAY BCR = 2+89.28 1/4 ? 1/2 ? HP 3/4 ? ECR = 1+41.00 MEEK WAY	16.00 R 16.00 R	EL = 140.57 EL = 141.31 EL = 141.95 EL = 142.62 EL = 143.09	Δ = 89°59'54" R = 25.00 T = 25.00 L = 39.27
8	MEEK WAY BCR = 1+41.00 1/4 ? 1/2 ? 3/4 ? ECR = 3+71.28 EPPERLY WAY	16.00 L 16.00 R	EL = 140.98 EL = 141.31 EL = 141.95 EL = 142.62 EL = 143.09	Δ = 90°00'00" R = 25.00 T = 25.00 L = 39.27

INSTALL CURB RAMP AT CURB RETURN PER WEST LINN DETAIL WL-507A, SHEET C6.0.

STORM LATERAL INSTALLATION CHART

LOT	SD STATION	SD LINE	LENGTH	I.E. @ MAIN	I.E. @ END	SLOPE
39	6+13.20	3	34.07	144.72	145.71	0.0291
40	5+62.37	3	33.45	143.82	144.99	0.0350
41	5+11.13	3	33.35	142.82	144.14	0.0394
42	4+62.08	3	33.57	141.87	143.26	0.0413
43	4+10.98	3	33.76	140.88	141.02	0.0041
44	3+63.19	3	33.00	139.73	141.13	0.0423
45	3+12.35	3	34.48	139.10	140.60	0.0436
46	2+61.78	3	34.19	138.47	139.45	0.0288
47	2+11.82	3	34.13	137.84	139.13	0.0378
48	1+63.19	3	33.00	137.23	138.57	0.0405
49	1+19.98	3	38.55	136.43	139.36	0.0759
50	0+71.12	3	35.73	135.65	136.21	0.0157
51	0+36.74	3	32.67	135.45	135.91	0.0140
63	5+75.00	3	43.08	144.06	145.66	0.0370
64	5+25.22	3	43.59	143.10	144.68	0.0363
65	4+76.09	3	43.00	142.15	143.93	0.0415
66	4+24.49	3	42.98	141.14	142.81	0.0388
67	CB 3-3-B	3	23.30	140.90	142.20	0.0558
68	3+24.79	3	43.64	139.25	141.14	0.0432
69	2+76.08	3	43.00	138.64	140.44	0.0418
70	2+26.08	3	43.00	138.02	140.24	0.0516
71	1+74.77	3	42.75	137.38	139.30	0.0450

ALL STORM DRAIN LATERALS SHALL BE 4" DIAMETER 3034 SDR35 PIPE UNLESS OTHERWISE NOTED AS C900.

MINIMUM LATERAL SLOPE OF 0.020 FT/FT

CATCH BASIN DATA

NO./ TYPE	STR. STA./ OFFSET	ELEVATION AT TOC	PIPE OUT INVERT	PIPE OUT SIZE/ LENGTH	PIPE OUT SLOPE
3-3-A G-1	MEEK WAY 4+78.80 16.00' R	146.46	140.46	10" 9.70	0.0814
3-3-B G-1	MEEK WAY 4+78.81 16.00' L	146.50	140.40	10" 19.70	0.0320
4-5-A CCI	MEEK WAY 1+47.20 16.00' L	140.94	OUT=137.89 IN=138.09	10" C900 46.57	0.0097
4-5-B CCI	MEEK WAY 1+47.20 16.00' R	140.85	138.25	10" C900 29.40	0.0054

CATCH BASIN NOTES:

1. FOR COMBINATION CURB INLET (CCI) AND TYPE G-1 CATCH BASIN DETAILS REFER TO SHEET C6.1, WL-601 AND WL-602 RESPECTIVELY.
2. STREET STATIONING & OFFSET GIVEN AT MIDPOINT OF CATCH BASIN @ TOP OF FACE OF CURB.
3. ALL CATCH BASIN LEADS SHALL BE RIB F794 PIPE UNLESS OTHERWISE NOTED AS C900.

NO.	DATE	BY	REVISION COMMENTS	Date	Initial	Issue Date:
Design	Drawn	Checked				
RCR/CJM	LMB	PHM				

RECORD DRAWING
BY: [illegible]
DATE: 11/3/08
Permitted design drawings stamped by:
Mike A. Peebles
Engineer 16682
July 20, 1993

West Hills DEVELOPMENT
735 SW 158TH AVENUE
BEAVERTON, OR 97006

"AS BUILT DRAWING"
BY: [illegible]
DATE: 11/3/08

AS-BUILT PLAN RE-SUBMITTAL- MAY 30, 2008

ARBOR COVE
STREET AND STORM DRAIN PLAN
& PROFILE
MEEK WAY: STA 1+00 TO 8+50.82

otak Incorporated
17355 SW Boones Ferry Rd.
Lake Oswego, OR 97035-5217
Phone: (503) 635-3618
FAX: (503) 635-5395
Internet: www.otak.com

14165 C165C301
Project No. Drawing No.
C3.1
Sheet No.

Copyright 2007 ©

LKG: SARAHN 02/29/2008 9:36am --> L:\PROJECT\14100\14165\DWG\C165C301.DWG

XREF LIST
Ltscale: 30
Resolved
C165X001
C165X230
C165X600
C165X190
C165X900
C165X010
C165X950

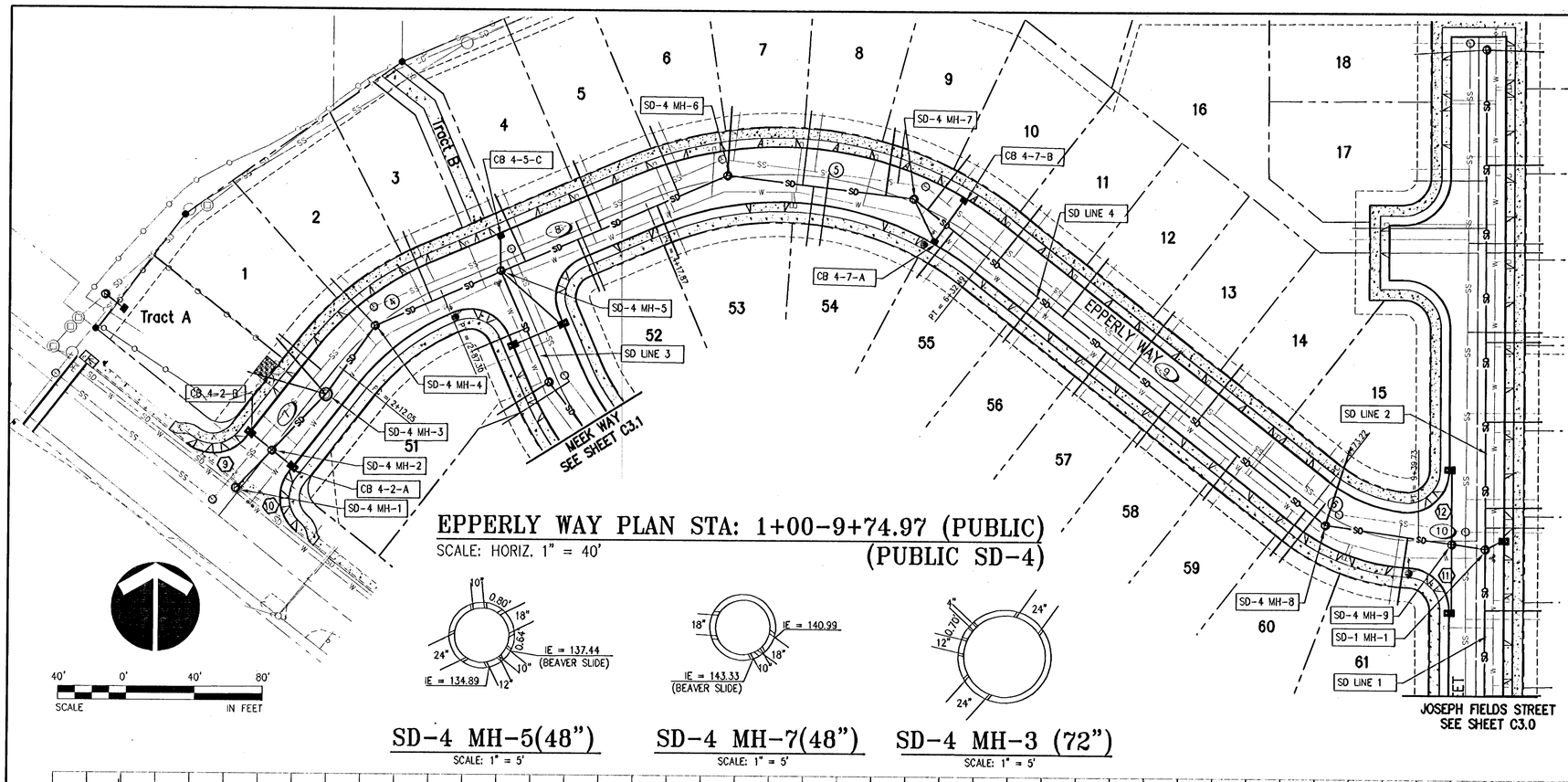

EPPERLY WAY PLAN STA: 1+00-9+74.97 (PUBLIC)
SCALE: HORIZ. 1" = 40'
(PUBLIC SD-4)

SD-4 MH-5(48") SD-4 MH-7(48") SD-4 MH-3 (72")
SCALE: 1" = 5' SCALE: 1" = 5' SCALE: 1" = 5'

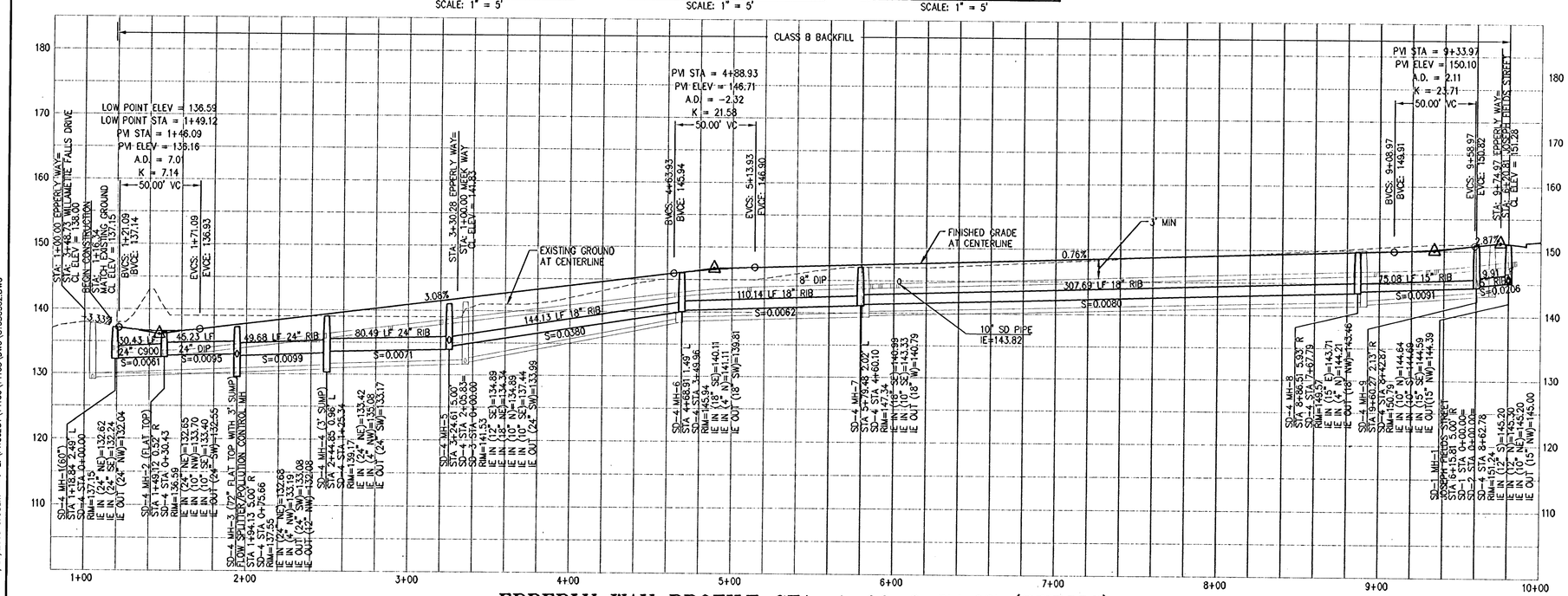

EPPERLY WAY PROFILE STA: 1+00-9+74.97 (PUBLIC)
SCALE: HORIZ. 1" = 40'
VERT. 1" = 10'
(PUBLIC SD-4)

CENTER LINE DATA

No.	LENGTH	BEARING
7	112.05'	N38°09'08"W
8	130.58'	S66°42'12"W
9	240.73'	N52°07'09"W
10	35.24'	S89°46'28"W

CENTERLINE CURVE DATA

No.	RADIUS	LENGTH	TANGENT	DELTA
4	151	75.24	38.42	28°33'04"
5	201	214.62	118.82	61°10'39"
6	100.00	66.51	34.54	38°06'23"

CURB RETURN CURVE DATA

NO.	DESCRIPTION	OFFSET	T.O.C. ELEV.	CURVE
9	EPPERLY WAY BCR = 1+45.69 1/4 ? HP 1/2 ? 3/4 ? ECR = 1+20.84 EPPERLY WAY	16.00 L 41.32 L	EL = 136.60 EL = 136.84 EL = 136.86 EL = 136.82 EL = 136.64 EL = 136.36	Δ = 90°43'20" R = 25.00 T = 25.32 L = 39.58
10	EPPERLY WAY BCR = 1+20.90 1/4 ? 1/2 ? 3/4 ? ECR = 1+45.89 EPPERLY WAY	41.32 R 16.00 R	EL = 138.89 EL = 138.44 EL = 137.79 EL = 137.12 EL = 136.60	Δ = 90°44'32" R = 25.00 T = 25.33 L = 39.59
11	EPPERLY WAY BCR = 9+35.65 1/4 ? 1/2 ? 3/4 ? ECR = 5+79.93 JOSEPH FIELDS STREET	16.00 R 16.00 L	EL = 150.29 EL = 150.62 EL = 151.04 EL = 151.40 EL = 151.60	Δ = 87°39'36" R = 25.00 T = 24.00 L = 38.25
12	JOSEPH FIELDS STREET BCR = BCR = 6+62.10 1/4 ? 1/2 ? 3/4 ? ECR = 9+29.96 EPPERLY WAY	 16.00 L 16.00 L	 EL = 151.60 EL = 151.35 EL = 150.89 EL = 150.42 EL = 150.17	 Δ = 95°35'59" R = 25.00 T = 27.57 L = 41.71

INSTALL CURB RAMP AT CURB RETURN PER WEST LINN DETAIL WL-507A, SHEET C6.0.

STORM LATERAL INSTALLATION CHART

LOT	SD STATION	SD LINE	LENGTH	I.E. @ MAIN	I.E. @ END	SLOPE
1	0+75.66	4	43.68	133.19	134.40	0.0277
2	1+25.34	4	37.92	135.08	136.10	0.0269
3	1+61.71	4	44.26	134.51	135.74	0.0278
4	2+21.36	4	43.03	135.51	137.81	0.0534
5	2+69.80	4	43.00	137.35	139.04	0.0392
6	3+19.18	4	44.44	139.23	140.57	0.0301
7	3+49.96	4	40.66	141.11	141.62	0.0125
8	3+94.20	4	43.83	140.97	142.46	0.0340
9	4+43.60	4	39.66	141.27	142.52	0.0314
10	4+70.05	4	40.65	141.65	143.31	0.0408
11	5+21.22	4	43.61	142.06	143.43	0.0314
12	5+71.25	4	43.67	142.46	143.82	0.0311
13	6+21.14	4	43.19	142.86	144.12	0.0291
14	6+71.44	4	43.57	143.26	144.29	0.0235
15	7+67.79	4	47.83	144.21	145.70	0.0312
52	2+54.50	4	33.00	136.77	138.48	0.0517
53	3+05.06	4	33.10	138.69	141.24	0.0769
54	4+00.83	4	34.56	141.01	141.92	0.0264
55	4+87.86	4	34.67	141.80	142.98	0.0342
56	5+52.84	4	33.06	142.32	143.39	0.0325
57	6+04.37	4	32.75	142.73	144.46	0.0529
58	6+52.06	4	32.89	143.11	143.93	0.0250
59	7+02.22	4	32.69	143.51	144.38	0.0266
60	7+53.42	4	33.63	143.92	145.00	0.0321
61	8+16.70	4	39.41	144.61	145.82	0.0306

ALL STORM DRAIN LATERALS SHALL BE 4" DIAMETER 3034 SDR35 PIPE UNLESS OTHERWISE NOTED AS C900.

MINIMUM LATERAL SLOPE OF 0.020 FT/FT

CATCH BASIN DATA

NO./ TYPE	STR. STA./ OFFSET	ELEVATION AT TOC	PIPE OUT		
			INVERT	SIZE/ LENGTH	SLOPE
4-2-A CCI	EPPERLY WAY 1+49.12 16.00' R	136.77	133.77	10" C900 14.18	0.0261
4-2-B CCI	EPPERLY WAY 1+49.12 16.00' L	136.47	134.02	10" C900 15.21	0.0210
4-5-C G-1	EPPERLY WAY 3+32.44 16.00' L	141.84	136.84	10" 20.96	0.0930
4-7-A G-1	EPPERLY WAY 6+01.88 16.00' R	147.59	OUT=143.49 IN=143.64	10" C900 27.37	0.0058
4-7-B G-1	EPPERLY WAY 6+04.92 16.00' L	147.48	144.08	10" C900 29.56	0.0149

CATCH BASIN NOTES:

1. FOR COMBINATION CURB INLET (CCI) AND TYPE G-1 CATCH BASIN DETAILS REFER TO SHEET C6.1, WL-601 AND WL-602 RESPECTIVELY.
2. STREET STATIONING & OFFSET GIVEN AT MIDPOINT OF CATCH BASIN @ TOP OF FACE OF CURB.
3. ALL CATCH BASIN LEADS SHALL BE RIB F794 PIPE UNLESS OTHERWISE NOTED AS C900.

NO.	DATE	BY	REVISION COMMENTS	Date	Initial	Issue Date:

Design RCK/CLM Drawn LMB Checked PHM

RECORD DRAWING
BY: [illegible]
DATE: 4/1/08
Permitted design drawings stamped by:
Mike A. Peebles
Engineer 16682
July 20, 1993

West Hills DEVELOPMENT
735 SW 158TH AVENUE
BEAVERTON, OR 97006

"AS BUILT DRAWING"
DATE 6/6/08 BY [illegible]

AS-BUILT PLAN RE-SUBMITTAL- MAY 30, 2008

ARBOR COVE

STREET AND STORM DRAIN PLAN
& PROFILE
EPPERLY WAY: STA 1+00 TO 9+74.97

otak Incorporated
17355 SW Boones Ferry Rd.
Lake Oswego, OR 97035-5217
Phone: (503) 635-3618
FAX: (503) 635-5395
Internet: www.otak.com

14165 C165C302
Project No. Drawing No.
C3.2
Sheet No.

Copyright 2007 ©

LKG: SARAHN 02/29/2008 9:38am --> L:\PROJECT\14100\14165\DWG\C165C302.DWG

XREF LIST
Ltscale: 1
Resolved
C165X001
C165X230
C165X600
C165X190
C165X900
C165X010
C165X950

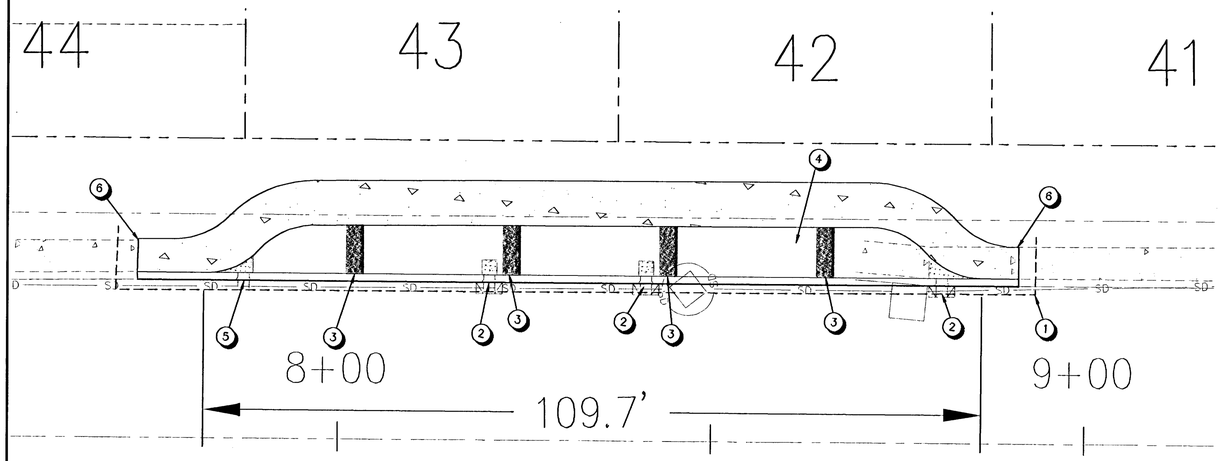

WILLAMETTE FALLS DRIVE STORM PLANTER PLAN

SCALE: HORIZ. 1" = 10'

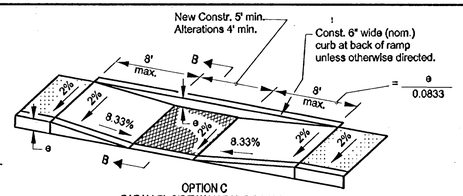

OPTION C
PARALLEL SIDEWALK RAMP DETAIL

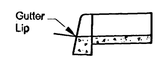

SECTION B-B

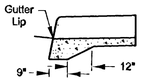

SECTION B-B
WITH MONOLITHIC CURB & SIDEWALK

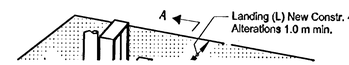

GENERAL NOTES:

1. Place diamond ramp texture in throat of ramp only. Ramp texturing is to be done with an expanded metal grate or other approved method placed and removed from wet concrete to leave a diamond pattern as shown. The long axis of the diamond pattern may be perpendicular or parallel to the curb. Groove depth is 1/8" nom. For constr. of sidewalk ramps outside of public right-of-way, check State Building Codes requirements.
2. Sidewalk curb ramp slopes shown are relative to the true level horizon (zero bubble).
3. In alterations curb ramp slope(s) may be 10% for a max. rise of 6" or 12.5% for a max. rise of 3". Curb ramps, in alterations, need not exceed 6' in length.
4. Side flares that are not part of the path of travel may be any slope. See RD750 General Note 4.
5. Ramps for paths intersecting a roadway should be full width of path. When a ramp is used to provide bicycle access from a roadway to a sidewalk, the ramp should be 8' wide wide with no texturing.
6. Sidewalk ramp details are based on ORS 447.310 and the proposed ADAAG Section 14, June 20, 1994
7. When 2 curb ramps are immediately adjacent as in Options A,B,C and F on RD750, the curb exposure (e) between the adjacent side flares may range between 3" and full design exposure.
8. For the purpose of this drawing, a curb ramp is considered "perpendicular" if the angle between the longitudianal axis of the ramp and a tangent to the curb at the ramp center is 75° or greater.
9. Tooled joints are required at all sidewalk ramp slope break lines.
10. Sidewalk flare is not necessary where the ramp is protected from pedestrian cross-travel.

GENERAL NOTES

1. SAWCUT EXISTING ASPHALT CONCRETE PAVEMENT
2. INSTALL INLET WITH GUTTER PER CITY OF PORTLAND GREEN STREET DETAIL D-1 ON SHEET C6.4
3. INSTALL CHECK DAM PER CITY OF PORTLAND GREEN STREET DETAIL P-1 ON SHEET C6.4
4. TYPICAL SWALE CROSS SECTION PER CITY OF PORTLAND GREEN STREET DETAIL S-1 ON SHEET C6.4
5. INSTALL OULET PER CITY OF PORTLAND GREEN STREET DETAIL D-1, SLOPE TO DRAIN, ON SHEET C6.4
6. INSTALL 5' WIDE SIDEWALK TO MATCH EXISITING SIDEWALK
7. INSTALL DOUBLE RAMP PER STANDARD DETAIL 507B, SHEET C6.1.
8. INSTALL PARALLEL SIDEWALK CURB RAMP. CONSTRUCT 4' WIDE RAMP THROAT WITH A 6' RAMP AT 12:1 MAX SLOPE, CONSTRUCT EAST RAMP ONLY, SEE DETAIL THIS SHEET
9. INSTALL CROSSWALK (PEDESTRIAN STRIPING AND SIGNAGE BY CITY), SEE SHEET C5.0

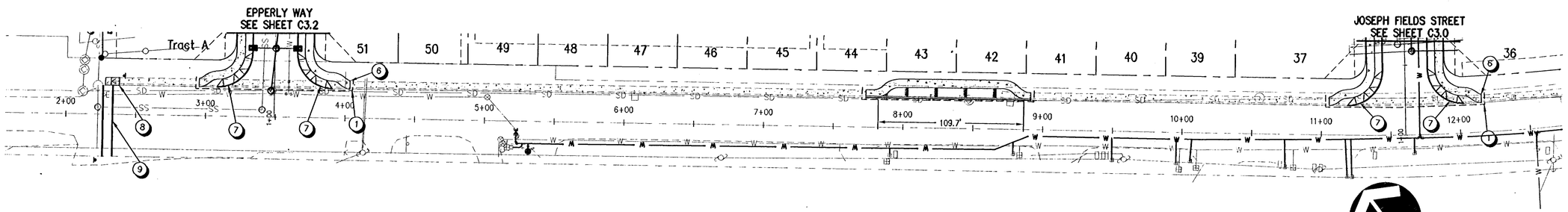

WILLAMETTE FALLS DRIVE PLAN STA: 2+60-12+60

SCALE: HORIZ. 1" = 40'

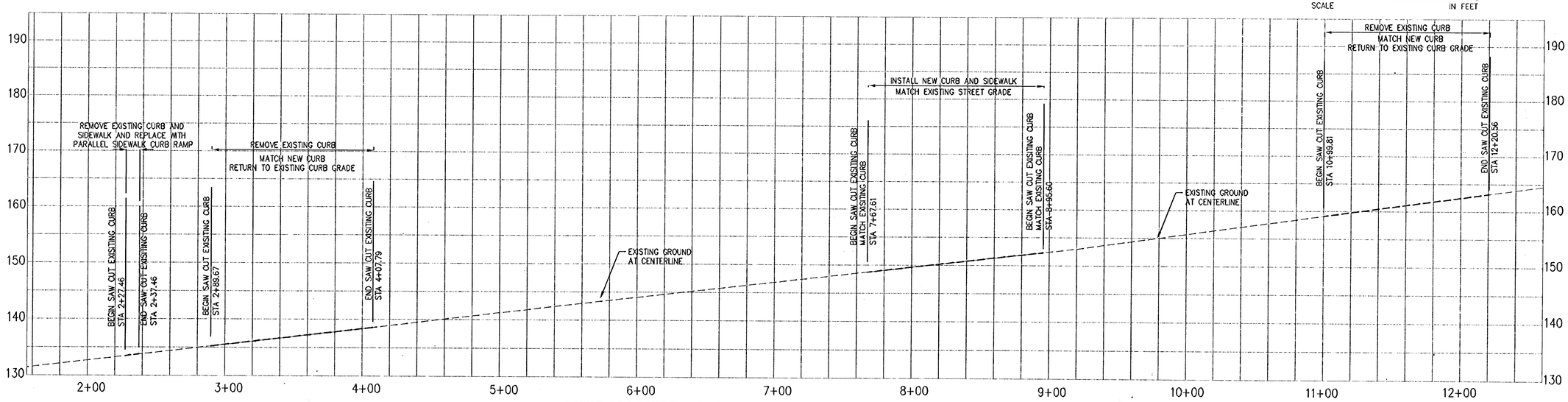

WILLAMETTE FALLS DRIVE PROFILE STA: 2+60-12+60

SCALE: HORIZ. 1" = 40'
VERT. 1" = 10'

NO.	DATE	BY	REVISION COMMENTS	Date	Initial	Issue Date:
Design		Drawn	Checked			
RCR/CLM		LMB	PHM			

RECORD DRAWING
BY: [illegible]
DATE: 4/3/08
Permitted design drawings stamped by:
Mike A. Peebles
Engineer 16682
July 20, 1993

West Hills DEVELOPMENT
735 SW 158TH AVENUE
BEAVERTON OR 97006

"AS BUILT" DRAWING
DATE 6/5/08 BY [illegible]

AS-BUILT PLAN RE-SUBMITTAL- MAY 30, 2008

ARBOR COVE
STREET PLAN
WILLAMETTE FALLS DRIVE:
STA 2+60 TO 12+60

otak Incorporated
17355 SW Boones Ferry Rd.
Lake Oswego, OR 97035-5217
Phone: (503) 635-3618
FAX: (503) 635-5395
Internet: www.otak.com

14165 C165C303
Project No. Drawing No.
C3.3
Sheet No.

Copyright 2007 ©

LKG: SARAHN 02/29/2008 10:35am --> L:\PROJECT\14100\14165\DWG\C165C303.DWG

XREF LIST
Ltscale: 1
Resolved
C165X001
C165X230
C165X600
C165X190
C165X950
C165X960
C165X430

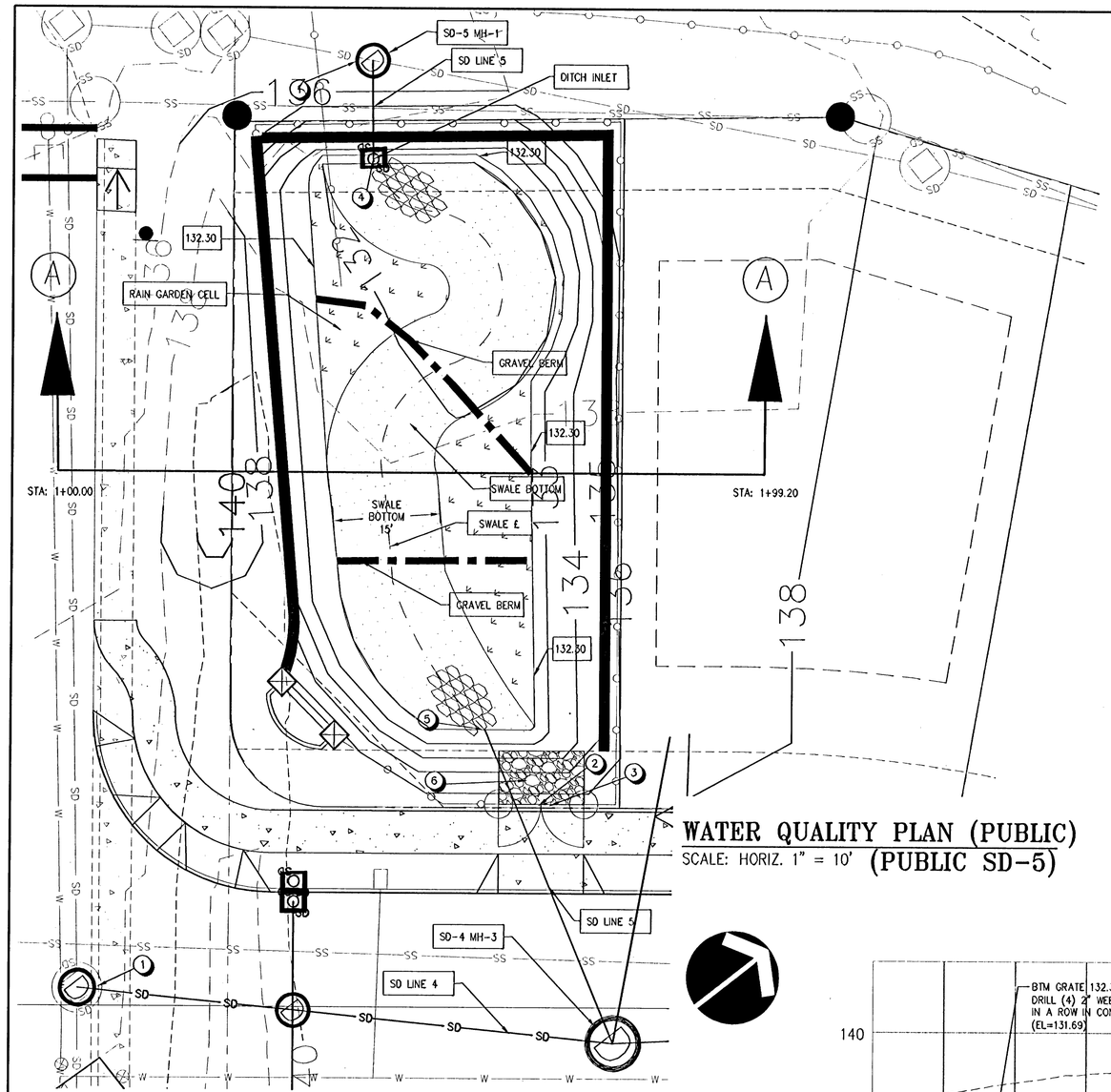

WATER QUALITY PLAN (PUBLIC)

SCALE: HORIZ. 1" = 10' (PUBLIC SD-5)

SD-4 MH-3 (72")

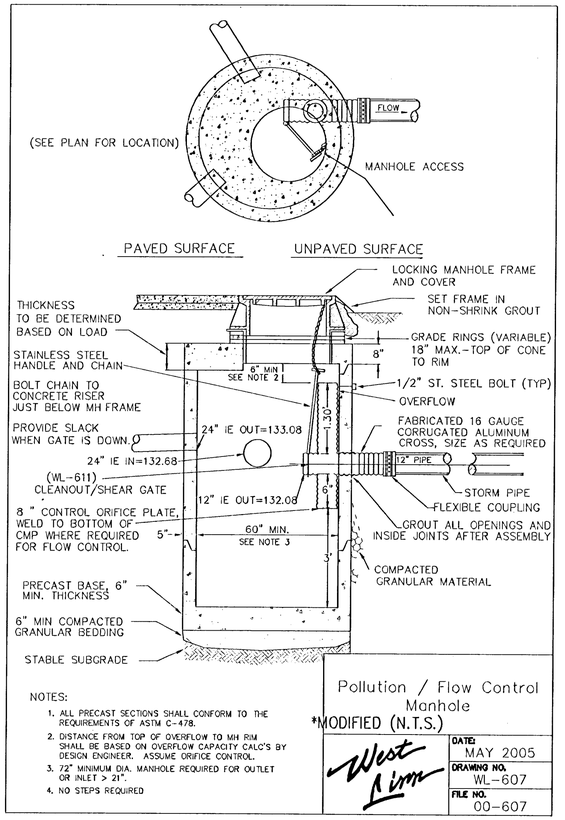

NOTES:

1. ALL PRECAST SECTIONS SHALL CONFORM TO THE REQUIREMENTS OF ASTM C-478.
2. DISTANCE FROM TOP OF OVERFLOW TO MH RIM SHALL BE BASED ON OVERFLOW CAPACITY CALC'S BY DESIGN ENGINEER. ASSUME ORIFICE CONTROL.
3. 72" MINIMUM DIA. MANHOLE REQUIRED FOR OUTLET OR INLET > 21".
4. NO STEPS REQUIRED

Pollution / Flow Control Manhole
*MODIFIED (N.T.S.)

West Linn

DATE:	MAY 2005
DRAWING NO.	WL-607
FILE NO.	00-607

*NOTE: DETAIL HAS BEEN MODIFIED TO MEET SPECIFIC DESIGN CRITERIA AND SPECIFICATIONS.

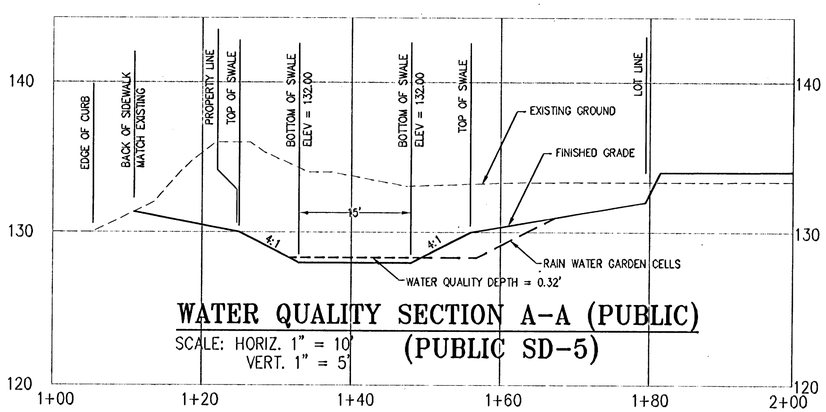

WATER QUALITY SECTION A-A (PUBLIC)

SCALE: HORIZ. 1" = 10'
VERT. 1" = 5' (PUBLIC SD-5)

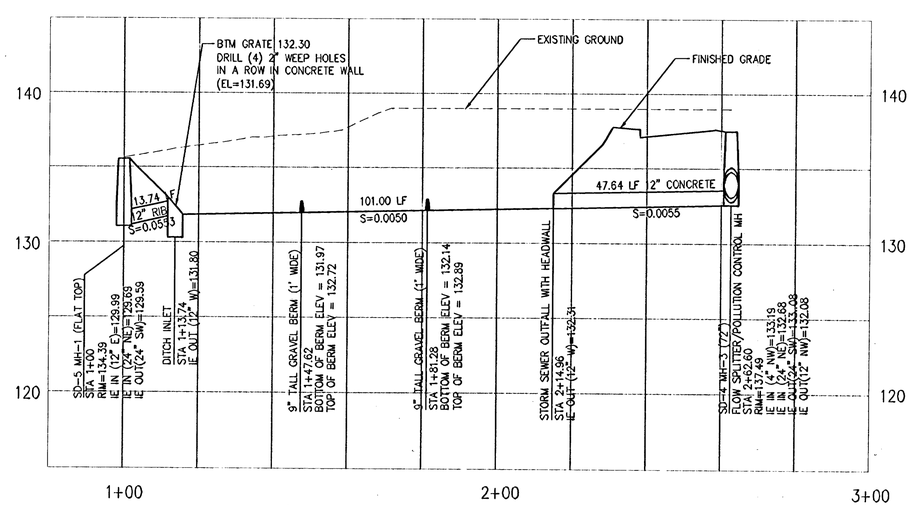

SD LINE 5 PROFILE STA: 1+00 - 2+62.60 (PUBLIC)

SCALE: HORIZ. 1" = 20'
VERT. 1" = 10' (PUBLIC SD-5)

GENERAL NOTES

1. CONSTRUCT NEW STORM DRAIN MANHOLE OVER EXISTING LINE. CONTRACTOR TO POT HOLE AND VERIFY DEPTH AND LOCATION PRIOR TO CONSTRUCTION.
2. INSTALL 5' HIGH FENCE. INSTALL BLACK VINYL COATED CYCLONE FENCE WITH 12' WIDE ACCESS GATES, PER DETAIL WL- 618 ON SHEET C6.2.
3. INSTALL SURFACE WATER FACILITY SIGN, PER CITY OF WEST LINN DETAIL WL- 615 ON SHEET C6.2.
4. INSTALL DITCH INLET, PER CITY OF WEST LINN DETAIL WL-603 ON SHEET C6.1.
5. INSTALL STORM WATER OUTFALL AND HEADWALL, PER CITY OF WEST LINN DETAILS WL- 613 AND WL-614 ON SHEET C6.1.
6. INSTALL WATER QAULITY POND ACCESS ROAD.

CONSTRUCTION NOTES:

REFER TO LANDSCAPING SHEET L1.1 FOR WATER QUALITY SWALE PLANTING PLAN AND DETAILS.

15' WIDE BERM ELEV. = 132.00'

101 LF WATER QUALITY SWALE @ 0.50% SLOPE

WATER QUALITY SWALE, 15' WIDE BOTTOM, 4:1 SIDE SLOPE.

FORM 9" TALL GRAVEL BERM TO DIVIDE SWALE INTO THREE SECTIONS. BERMS TO CREATE PONDING FOR RAIN WATER GARDEN CELLS.

GRADE SHELVES FOR RAIN WATER GARDEN AT 4" ABOVE BOTTOM OF SWALE

INSTALL CLASS 50 RIP RAP PAD PER DETAIL WL-614 ON SHEET C6.1.

NO.	DATE	BY	REVISION COMMENTS

Design	Drawn	Checked	Date	Initial Issue Date:
RCR/CLM	LMB	PHM		

RECORD DRAWING
BY:
DATE: 6/3/08
Permitted design drawings stamped by:
Mike A. Peebles
Engineer 16682
July 20, 1993

West Hills DEVELOPMENT
735 SW 158TH AVENUE
BEAVERTON, OR 97006

"AS BUILT DRAWING"
DATE 6/03/08 BY

AS-BUILT PLAN RE-SUBMITTAL- MAY 30, 2008

ARBOR COVE

STREET AND STORM DRAIN PLAN
& PROFILE
WATER QUALITY SWALE: PLAN & PROFILE

otak Incorporated
17355 SW Boones Ferry Rd.
Lake Oswego, OR 97035-5217
Phone: (503) 635-3618
FAX: (503) 635-5395
Internet: www.otak.com

14165 C165C304
Project No. Drawing No.
C3.4
Sheet No.

Copyright 2007 ©

LKO: CHADM 05/29/2008 2:53pm --> L:\PROJECT\14100\14165\DWG\C165C304.DWG

XREF LIST
Ltscale: 60

Resolved
C165X001
C165X600
C165X190
C165X230
C165X010

LEGEND:

EXISTING

STORM DRAIN	SD
WATER LINE	W
SANITARY SEWER	SS
STORM MANHOLE	
STORM CATCH BASIN	
SANITARY MANHOLE	
GAS LINE	G
TELEPHONE LINE	T
TELEPHONE MANHOLE	
WATER VALVE	
TV LINE	T.V.
POWER LINE	OHL
STREET LIGHT	
FIRE HYDRANT	
WATER METER	

PROPOSED

STORM DRAIN	SD
STORM LATERAL	
STORM MANHOLE	
STORM CATCH BASIN	
SANITARY SEWER	SS
SANITARY LATERAL	
SANITARY MANHOLE	
WATER LINE	W
FIRE HYDRANT	
GATE VALVE	
WATER METER	(SINGLE)
STREET LIGHT	
PROJECT BOUNDARY	

NO.	DATE	BY	REVISION COMMENTS

Design RGR/CLM Drawn LMB Checked PHM Date Initial Issue Date:

RECORD DRAWING
BY
DATE: 6/3/08
Permitted design drawings stamped by:
Mike A. Peebles
Engineer 16682
July 20, 1993

West Hills
DEVELOPMENT
735 SW 158TH AVENUE
BEAVERTON, OR 97006

"AS BUILT DRAWING"
DATE 6/3/08 BY

AS-BUILT PLAN RE-SUBMITTAL- MAY 30, 2008

ARBOR COVE

SANITARY SEWER AND WATER PLAN
COMPOSITE UTILITY PLAN

otak
Incorporated
17355 SW Boones Ferry Rd.
Lake Oswego, OR 97035-5217
Phone: (503) 635-3618
FAX: (503) 635-5395
Internet: www.otak.com

14165 C165C400C
Project No. Drawing No.
C4.0C
Sheet No.

Copyright 2007 ©

LXO: ChADM 05/29/2008 2:55pm --> L:\PROJECT\14100\14165\DWG\C165C400C.DWG

XREF LIST
Ltscale: 30
Resolved
C165X001
C165X230
C165X600
O165X190
C165X900
C165X950

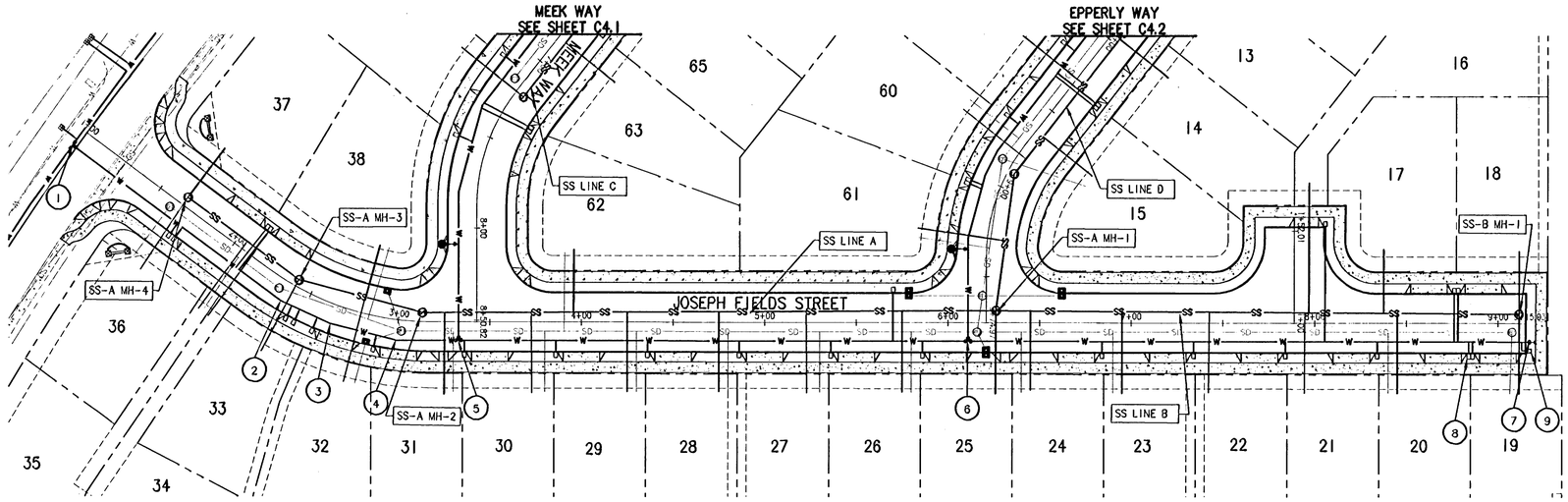

JOSEPH FIELDS STREEET PLAN STA: 1+00-END (PUBLIC)

SCALE: HORIZ. 1" = 40'

(PUBLIC SS-A AND SS-B)

40' 0' 40' 80'
SCALE IN FEET

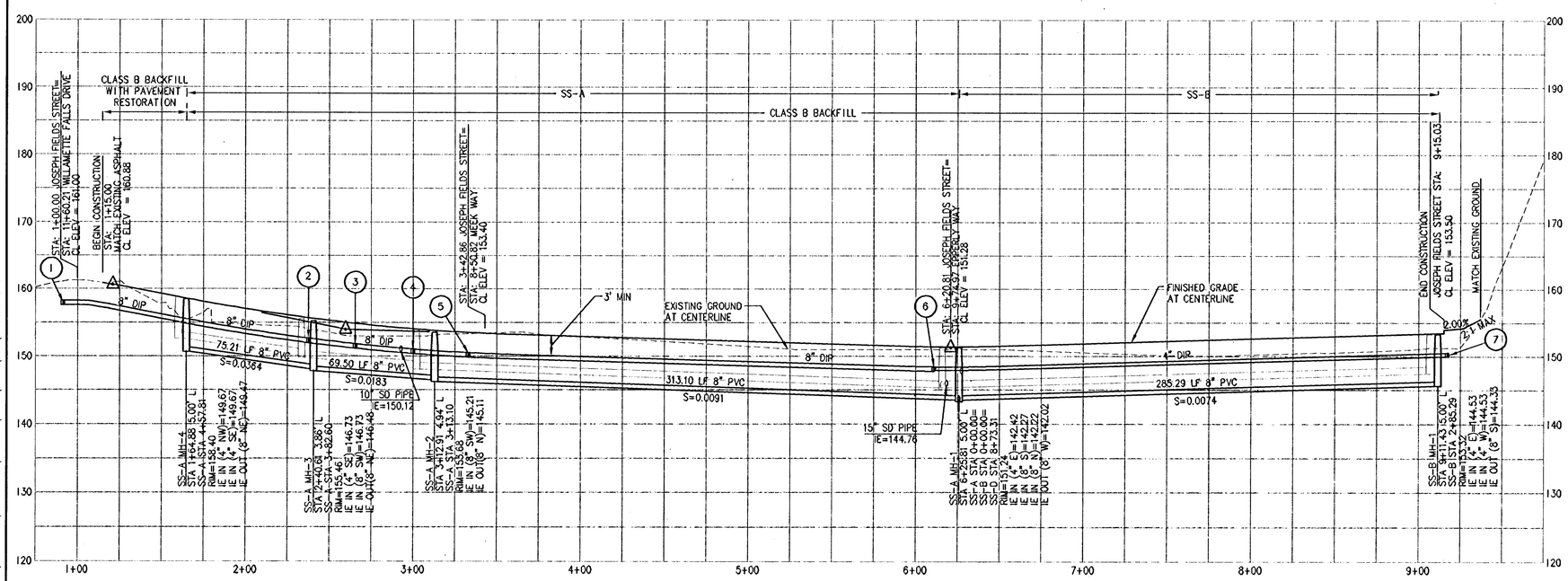

JOSEPH FIELDS STREEET PLAN STA: 1+00-END (PUBLIC)

SCALE: HORIZ. 1" = 40'
VERT. 1" = 10'

(PUBLIC SS-A AND SS-B)

WATERLINE CONSTRUCTION NOTES:

1. STA 0+90.32 OFFSET: 10.00' RT
   INSTALL 8" FLG X 8" FLG X 8" FLG TEE
   WITH (3) 8" FLG X MJ GATE VALVE (N,W,E).
   CONTRACTOR TO POT HOLE AND VERIFY DEPTH
   AND LOCATION.
2. STA 2+37.52 OFFSET: 10.87' RT
   INSTALL 11.25° BEND
   (ACTUAL DEFLECTION =11.761°)
3. STA 2+65.46 OFFSET: 10.64' RT
   INSTALL 11.25° BEND
   (ACTUAL DEFLECTION=10.814°)
4. STA 2+99.89 OFFSET: 11.06' RT
   INSTALL 11.25° BEND
   (ACTUAL DEFLECTION=13.812°)
5. STA 3+32.86 OFFSET: 10.00' RT
   INSTALL 8" X 8" X 8" TEE
   WITH (3) 8" MJ GATE VALVE (N, W, S)
6. STA 6+10.81 OFFSET: 10.00' RT
   INSTALL 8" X 8" X 8" TEE
   WITH (2) 8" MJ GATE VALVE (W, S)
   INSTALL 8" X 4" REDUCER
   WITH (1) 4" MJ GATE VALVE (N)
7. STA: 9+18.01 OFFSET: 10.00' RT
   INSTALL BLOW OFF ASSEMBLY
   SEE DETAIL WL-404A, SHEET C6.3
8. SINGLE WATER SERVICE AND 1"
   METER (TYPICAL)
   SEE DETAIL WL-402, SHEET C6.3
9. 2" IRRIGATION SERVICE AND
   1½" IRRIGATION METER,
   SEE DETAIL WL-403, SHEET C6.3

SANITARY LATERAL INSTALLATION CHART

LOT	SS STATION	SS LINE	LENGTH	I.E. @ MAIN	I.E. @ END	SLOPE
16	1+70.66	SS B	70.22	143.65	145.50	0.0264
17	2+11.41	SS B	34.33	143.95	147.00	0.0888
18	2+85.29	SS B	33.69	144.53	146.32	0.0531
19	2+85.29	SS B	43.00	144.53	147.40	0.0667
20	2+18.88	SS B	43.00	144.01	146.20	0.0510
21	1+68.48	SS B	43.79	143.63	145.73	0.0479
22	1+16.38	SS B	43.82	143.25	146.30	0.0697
23	0+68.88	SS B	44.22	142.90	145.75	0.0645
24	0+18.88	SS B	43.00	142.53	145.66	0.0729
25	0+00.00	SS B	45.06	142.42	145.55	0.0695
26	0+51.13	SS A	43.89	142.90	145.69	0.0635
27	1+03.56	SS A	44.27	143.38	145.80	0.0547
28	1+51.12	SS A	43.26	143.81	146.07	0.0522
29	2+01.12	SS A	43.00	144.27	146.65	0.0554
30	2+53.53	SS A	43.58	144.74	147.86	0.0715
31	3+00.85	SS A	44.00	145.17	148.50	0.0756
32	3+45.42	SS A	47.00	145.97	149.38	0.0726
33	3+82.60	SS A	43.49	146.73	151.42	0.1078
34	4+11.05	SS A	44.84	147.93	151.38	0.0764
35	4+17.52	SS A	44.71	148.17	150.71	0.0569
36	4+57.81	SS A	46.81	149.67	151.82	0.0459
37	4+57.81	SS A	33.01	149.67	151.77	0.0636
38	3+44.93	SS A	29.38	145.96	147.76	0.0613
62	2+30.51	SS A	33.75	144.53	146.00	0.0434

ALL SANITARY LATERALS SHALL BE 4" DIAMETER 3034 SDR35 PIPE UNLESS OTHERWISE NOTED AS C900.

MINIMUM LATERAL SLOPE AT 0.020 FT/FT.

NO.	DATE	BY	REVISION COMMENTS	Date	Initial Issue Date:

Design RCR/CLM
Drawn LMB
Checked PHM

RECORD DRAWING
BY: Mauck
DATE: 12/3/08
Permitted design drawings stamped by:
Mike A. Peebles
Engineer 16682
July 20, 1993

West Hills DEVELOPMENT
15455 NW GREENBRIER PKWY
BEAVERTON, OR 97006

"AS BUILT DRAWING"
DATE 12/3/08 BY

AS-BUILT PLAN RE-SUBMITTAL- MAY 30, 2008

ARBOR COVE

SANITARY SEWER AND WATER PLAN & PROFILE
JOSEPH FIELDS ST: STA 1+00 TO END

otak Incorporated
17355 SW Boones Ferry Rd.
Lake Oswego, OR 97035-5217
Phone: (503) 635-3618
FAX: (503) 635-5395
Internet: www.otak.com

14165 C165C400
Project No. Drawing No.
C4.0
Sheet No.

Copyright 2007 ©

LXO: CHADM 05/29/2008 2:57pm --> L:\PROJECT\14100\14165\DWG\C165C400.DWG

XREF LIST
Ltscale: 30
Resolved
C165X001
C165X230
C165X600
C165X190
C165X900
C165X950
C165X010

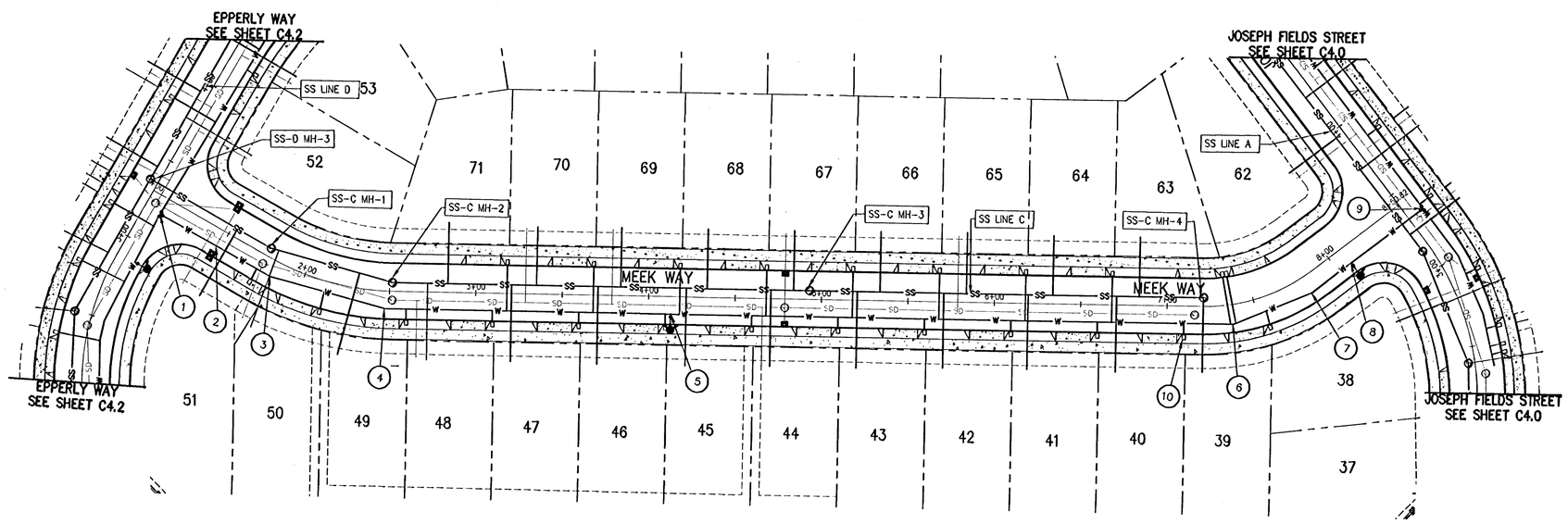

WATERLINE CONSTRUCTION NOTES:

1. STA 1+10.00 OFFSET: 10.00' RT
   INSTALL 8" X 8" X 8" TEE
   WITH (3) 8" MJ GATE VALVE (N, S, E)
2. STA 1+47.20 OFFSET: 9.67' RT
   DEFLECT WATER LINE UNDER
   CATCH BASIN LEAD TO MAINTAIN
   MIN. 1' SEPARATION
3. STA 1+82.46 OFFSET: 9.52' RT
   INSTALL 11.25° BEND
   ACTUAL DEFLECTION (14.000°)
4. STA 2+47.54 OFFSET: 10.06' RT
   INSTALL 11.25° BEND
   ACTUAL DEFLECTION (14.316°)
5. STA 4+12.92 OFFSET: 10.00' RT
   INSTALL FIRE HYDRANT ASSEMBLY
   SEE DETAIL WL-401, SHEET C6.3
6. STA 7+36.55 OFFSET: 11.37' RT
   INSTALL 22.5° BEND
   ACTUAL DEFLECTION (22.858°)
7. STA 7+81.01 OFFSET: 10.26' RT
   INSTALL 11.25° BEND
   ACTUAL DEFLECTION (15.248°)
8. STA 8+08.73 OFFSET: 10.00' RT
   INSTALL FIRE HYDRANT ASSEMBLY
   SEE DETAIL WL-401, SHEET C6.3
9. STA 8+60.82 OFFSET: 10.00' RT
   INSTALL 8" X 8" X 8" TEE
   WITH (3) 8" MJ GATE VALVE (N, S, W)
10. SINGLE WATER SERVICE AND 1"
    METER (TYPICAL)
    SEE DETAIL WL-402, SHEET C6.3

MEEK WAY PLAN STA: 1+00-8+50.82 (PUBLIC)
(PUBLIC SS-C)

SCALE: HORIZ. 1" = 40'

40' 0' 40' 80'
SCALE IN FEET

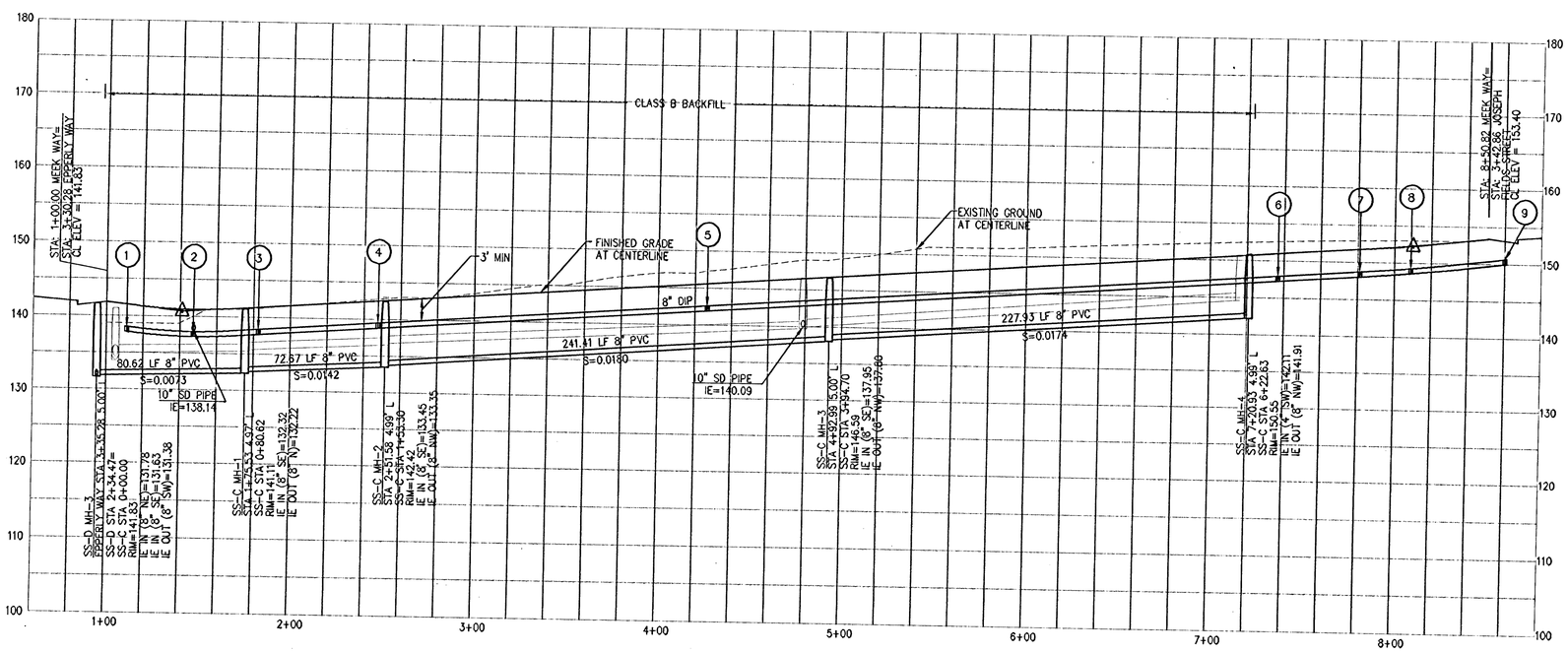

MEEK WAY PROFILE STA: 1+00-8+50.82 (PUBLIC)
(PUBLIC SS-C)

SCALE: HORIZ. 1" = 40'
VERT. 1" = 10'

SANITARY LATERAL INSTALLATION CHART

LOT	SS STATION	SS LINE	LENGTH	I.E. @ MAIN	I.E. @ END	SLOPE
39	6+22.63	SS C	43.00	142.11	145.08	0.0691
40	5+71.57	SS C	43.70	141.19	144.08	0.0660
41	5+20.41	SS C	43.00	140.30	143.45	0.0732
42	4+71.57	SS C	43.00	139.45	142.84	0.0787
43	4+21.57	SS C	44.00	138.58	141.52	0.0667
44	3+71.57	SS C	44.00	137.55	140.31	0.0628
45	3+22.53	SS C	44.60	136.66	139.80	0.0703
46	2+72.53	SS C	44.55	135.76	139.10	0.0749
47	2+22.53	SS C	44.00	134.86	136.77	0.0433
48	1+73.82	SS C	44.00	133.99	136.98	0.0680
49	1+33.68	SS C	48.00	133.24	135.84	0.0542
50	0+85.16	SS C	46.44	132.55	134.31	0.0379
51	0+58.12	SS C	44.00	132.22	134.89	0.0607
63	5+84.57	SS C	34.00	141.42	145.11	0.1085
64	5+34.57	SS C	34.00	140.55	144.23	0.1082
65	4+84.57	SS C	35.00	139.68	142.77	0.0883
66	4+34.57	SS C	34.43	138.81	142.31	0.1016
67	3+84.57	SS C	34.00	137.78	140.73	0.0868
68	3+34.57	SS C	34.00	136.88	140.57	0.1085
69	2+85.53	SS C	34.00	136.00	140.15	0.1221
70	2+36.94	SS C	33.55	135.12	139.05	0.1171
71	1+85.53	SS C	35.00	134.20	137.67	0.0992

ALL SANITARY LATERALS SHALL BE 4" DIAMETER 3034 SDR35 PIPE UNLESS OTHERWISE NOTED AS C900.

MINIMUM LATERAL SLOPE AT 0.020 FT/FT.

NO.	DATE	BY	REVISION COMMENTS	Date	Initial	Issue Date:

Design RCR/CLM Drawn LMB Checked PHM

RECORD DRAWING
BY: [signature]
DATE: 6/3/08
Permitted design drawings stamped by:
Mike A. Peebles
Engineer 16682
July 20, 1993

West Hills DEVELOPMENT
735 SW 158TH AVENUE
BEAVERTON, OR 97006

"AS BUILT DRAWING"
BY [signature]
DATE 6/2/08

AS-BUILT PLAN RE-SUBMITTAL- MAY 30, 2008

ARBOR COVE

SANITARY SEWER AND WATER PLAN
& PROFILE
MEEK WAY: STA 1+00 TO 8+50.82

otak Incorporated
17355 SW Boones Perry Rd.
Lake Oswego, OR 97035-5217
Phone: (503) 635-3618
FAX: (503) 635-5395
Internet: www.otak.com

Project No. 14165 Drawing No. C165C401
Sheet No. C4.1

Copyright 2007 ©

LKO: CHADM 05/29/2008 2:59pm ---> L:\PROJECT\14100\14165\DWG\C165C401.DWG

XREF LIST
Ltscale: 30
Resolved
C165X001
C165X230
C165X600
C165X190
C165X900
C165X950
C165X010

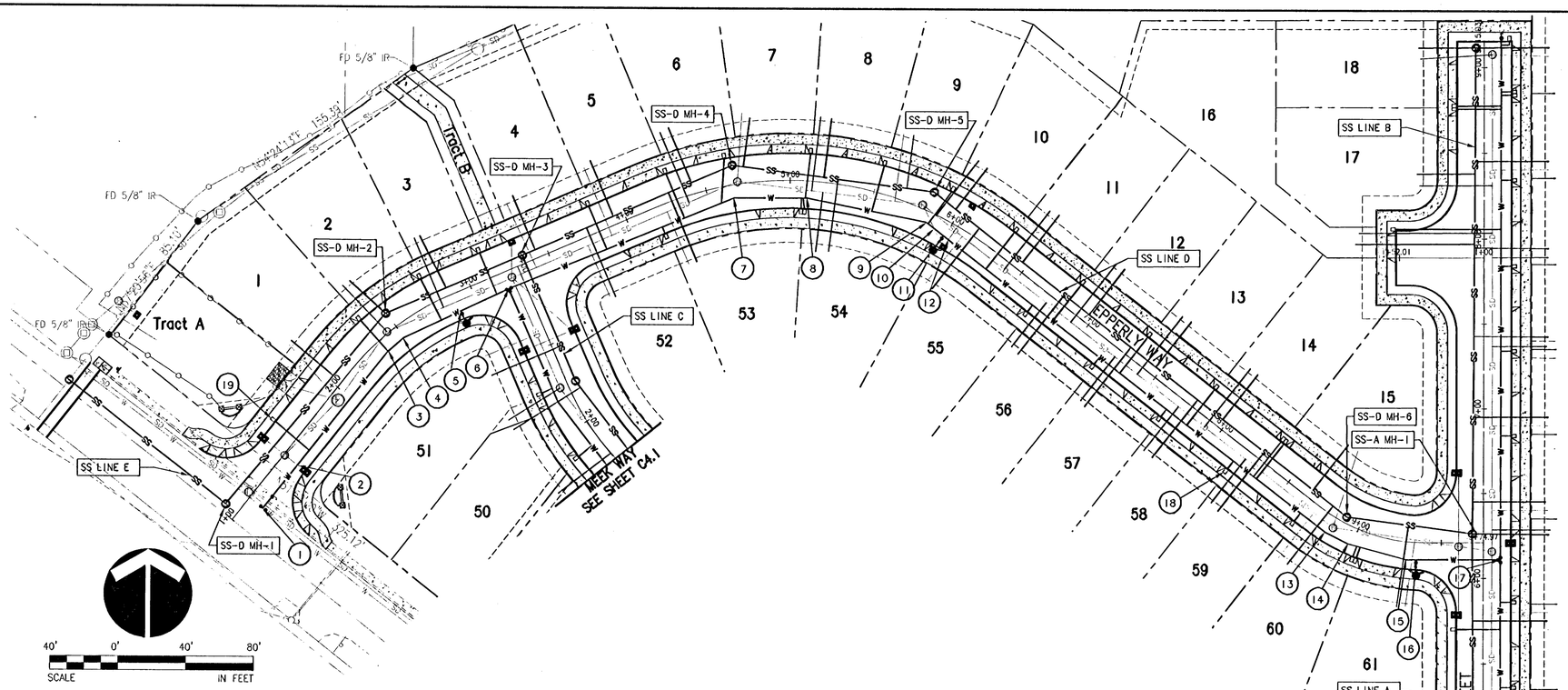

EPPERLY WAY PLAN STA: 1+00-9+74.97 (PUBLIC)
SCALE: HORIZ. 1" = 40'
(PUBLIC SS-D)

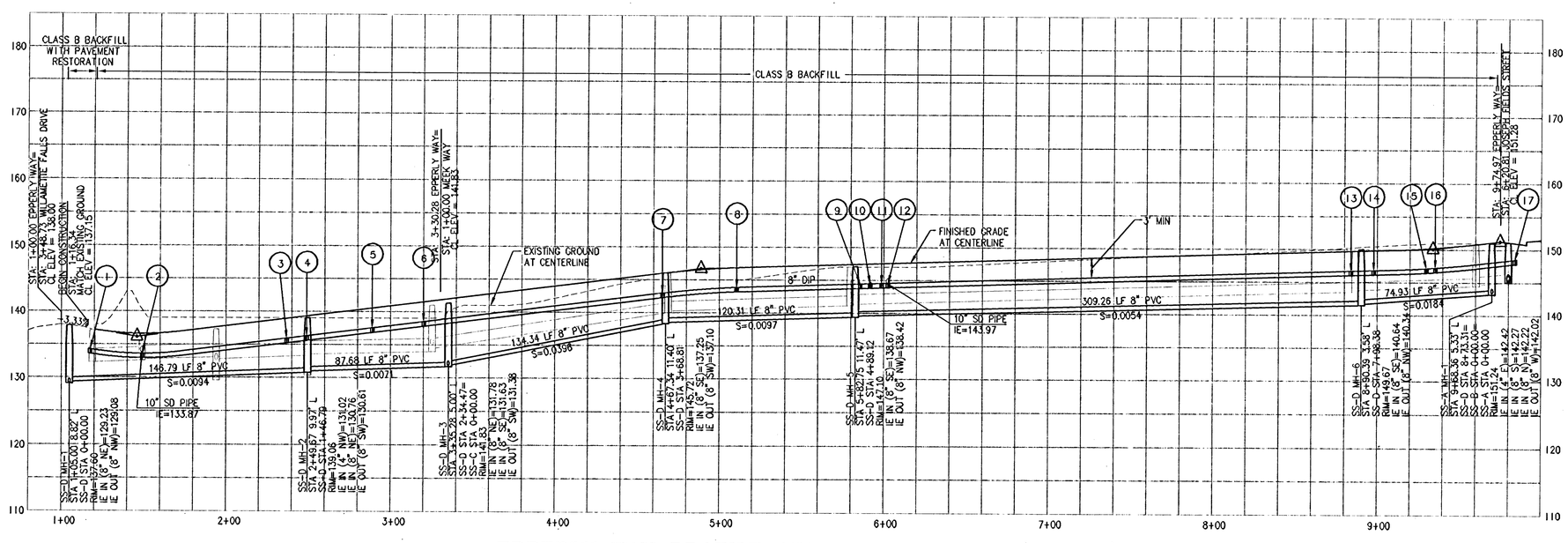

EPPERLY WAY PROFILE STA: 1+00-9+74.97 (PUBLIC)
SCALE: HORIZ. 1" = 40'
VERT. 1" = 10'
(PUBLIC SS-D)

WATERLINE CONSTRUCTION NOTES:

1. STA 1+16.58 OFFSET: 10.00' RT
CUT IN 10" X 10" X 8" TEE TO EXISTING 10" WATER MAIN WITH (2) 10" GATE VALVES (W,E). ORIENT TEE DOWN TO 90° VERTICAL BEND WITH (1) 8" GATE VALVE (N). CONTRACTOR TO POT HOLE AND VERIFY DEPTH AND LOCATION.
2. STA 1+49.13 OFFSET: 10.00' RT
DEFLECT WATER LINE UNDER CATCH BASIN LEAD TO MAINTAIN MIN. 1' SEPARATION.
3. STA 2+36.97 OFFSET: 8.06' RT
INSTALL 11.25° BEND (ACTUAL DEFLECTION = 11.072°)
4. STA 2+49.12 OFFSET: 7.92' RT
INSTALL 11.25° BEND (ACTUAL DEFLECTION = 15.423°)
5. STA 2+88.98 OFFSET: 11.12' RT
INSTALL FIRE HYDRANT ASSEMBLY PER DETAIL WL-401, SHEET C6.3.
6. STA 3+20.28 OFFSET: 10.00' RT
INSTALL 8" X 8" X 8" TEE WITH (3) 8" MJ GATE VALVE (N, S, E).
7. STA 4+65.45 OFFSET: 7.48' RT
INSTALL 22.5° BEND (ACTUAL DEFLECTION = 22.141°)
8. STA 5+10.55 OFFSET: 9.98' RT
INSTALL 11.25° BEND (ACTUAL DEFLECTION = 11.072°)
9. STA 5+85.72 OFFSET: 6.46' RT
INSTALL 22.5° BEND (ACTUAL DEFLECTION = 26.484°)
10. STA 5+91.60 OFFSET: 7.68' RT
DEFLECT WATER LINE UNDER CATCH BASIN LEAD TO MAINTAIN MIN. 1' SEPARATION.
11. STA 5+98.71 OFFSET: 8.92' RT
INSTALL FIRE HYDRANT ASSEMBLY PER DETAIL WL-401, SHEET C6.3.
12. STA 6+02.49 OFFSET: 9.48' RT
DEFLECT WATER LINE UNDER CATCH BASIN LEAD TO MAINTAIN MIN. 1' SEPARATION.
13. STA 8+83.95 OFFSET: 10.64' RT
INSTALL 11.25° BEND (ACTUAL DEFLECTION = 10.922°)
14. STA 8+97.83 OFFSET: 10.33' RT
INSTALL 11.25° BEND (ACTUAL DEFLECTION = 11.671°)
15. STA 9+30.00 OFFSET: 10.52' RT
INSTALL 11.25° BEND (ACTUAL DEFLECTION = 15.095°)
16. STA 9+35.43 OFFSET: 10.10' RT
INSTALL FIRE HYDRANT ASSEMBLY PER DETAIL WL-401, SHEET 6.3.
17. STA 9+84.97 OFFSET: 10.00' RT
INSTALL 8" X 8" X 8" TEE WITH (3) 8" MJ GATE VALVE (N, S, W).
18. SINGLE WATER SERVICE AND 1" METER (TYPICAL) SEE DETAIL WL-402, SHEET C6.3.
19. 2" IRRIGATION SERVICE AND 1½" IRRIGATION METER, SEE DETAIL WL-403, SHEET C6.3.

SANITARY LATERAL INSTALLATION CHART

LOT	SS STATION	SS LINE	LENGTH	I.E. @ MAIN	I.E. @ END	SLOPE
1	0+98.75	D	32.27	130.32	132.66	0.0724
2	1+46.79	D	29.07	131.02	132.92	0.0654
3	1+85.51	D	34.00	131.20	134.73	0.1038
4	2+42.77	D	34.00	132.28	137.26	0.1466
5	2+92.77	D	35.00	134.26	137.47	0.0918
6	3+42.77	D	35.00	136.24	137.11	0.0250
7	3+75.46	D	29.00	137.48	140.91	0.1182
8	4+23.47	D	35.00	137.95	141.93	0.1138
9	4+72.74	D	31.44	138.42	142.21	0.1204
10	5+05.01	D	30.25	138.92	143.00	0.1348
11	5+55.24	D	35.00	139.19	144.17	0.1422
12	6+05.24	D	34.00	139.46	143.92	0.1311
13	6+55.24	D	33.75	139.73	143.35	0.1071
14	7+05.24	D	33.57	140.00	144.14	0.1232
15	7+72.93	D	34.00	140.37	143.67	0.0971
52	2+75.57	D	43.80	133.57	136.09	0.0574
53	3+28.08	D	43.36	135.65	138.60	0.0680
54	4+31.91	D	42.00	138.03	141.31	0.0781
55	5+22.84	D	45.00	139.02	141.00	0.0440
56	5+86.57	D	44.00	139.36	142.00	0.0599
57	6+36.57	D	44.00	139.63	142.72	0.0702
58	6+86.57	D	43.00	139.90	142.38	0.0576
59	7+36.57	D	44.00	140.17	143.46	0.0747
60	7+88.07	D	43.44	140.45	142.95	0.0575
61	8+35.20	D	48.00	141.48	144.76	0.0682

ALL SANITARY LATERALS SHALL BE 4" DIAMETER 3034 SDR35 PIPE UNLESS OTHERWISE NOTED AS C900

MINIMUM LATERAL SLOPE AT 0.020 FT/FT

NO.	DATE	BY	REVISION COMMENTS

Design | Drawn | Checked | Date | Initial Issue Date:
RCR/CLM | LMB | PHM

RECORD DRAWING
BY: [signature]
DATE: 4/3/08
Permitted design drawings stamped by:
Mike A. Peebles
Engineer 16682
July 20, 1993

West Hills DEVELOPMENT
735 SW 158TH AVENUE
BEAVERTON, OR 97006

"AS BUILT DRAWING"
DATE 4/3/08 BY [signature]

AS-BUILT PLAN RE-SUBMITTAL- MAY 30, 2008

ARBOR COVE
SANITARY SEWER AND WATER PLAN
& PROFILE
EPPERLY WAY: STA 1+00 TO 9+74.97

otak Incorporated
17355 SW Boones Ferry Rd.
Lake Oswego, OR 97035-5217
Phone: (503) 635-3618
FAX: (503) 635-5395
Internet: www.otak.com

14165 C165C402
Project No. Drawing No.
C4.2
Sheet No.

Copyright 2007 ©

LKG: CHADM 05/29/2008 2:52pm --> L:\PROJECT\14100\14165\DWG\C165C402.DWG

XREF LIST
Ltscale: 40
Resolved
C165X230
C165X600
C165X190
C165X001
C165X300
C165X950

GENERAL NOTES

1. CONSTRUCT NEW SANITARY SEWER MANHOLE OVER EXISTING LINE. CONTRACTOR TO POT HOLE AND VERIFY DEPTH AND LOCATION.

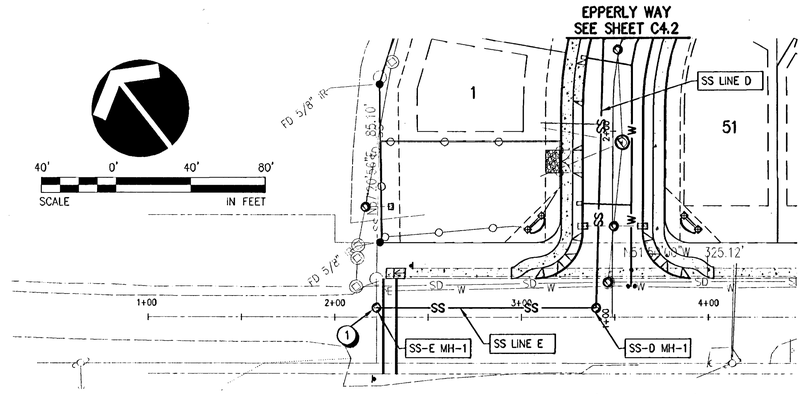

WILLAMETTE FALLS DRIVE PLAN (PUBLIC)

SCALE: HORIZ. 1" = 40' (PUBLIC SS-E)

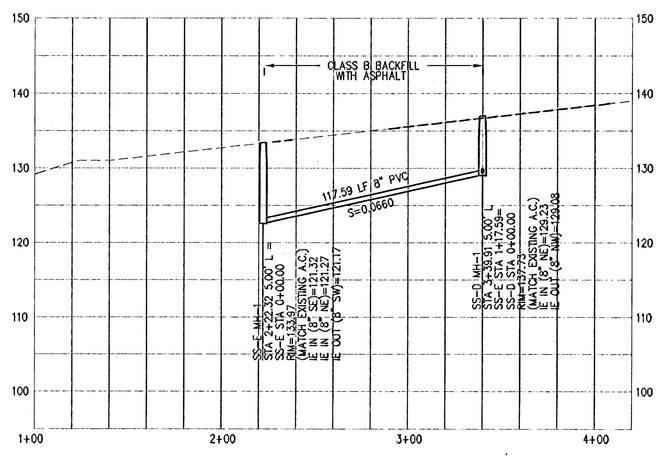

WILLAMETTE FALLS DRIVE PROFILE (PUBLIC)

SCALE: HORIZ. 1" = 40'
VERT. 1" = 10' (PUBLIC SS-E)

NO.	DATE	BY	REVISION COMMENTS

Design: RCR/CLW Drawn: LMB Checked: PHM Date: Initial issue Date:

RECORD DRAWING
BY: [signature]
DATE: 6/3/08
Permitted design drawings stamped by:
Mike A. Peebles
Engineer 16682
July 20, 1993

West Hills DEVELOPMENT
735 SW 158TH AVENUE
BEAVERTON, OR 97006

"AS BUILT DRAWING"
DATE 6/3/08 BY [signature]

AS-BUILT PLAN RE-SUBMITTAL- MAY 30, 2008

ARBOR COVE

SANITARY SEWER AND WATER PLAN
& PROFILE
WILLAMETTE FALLS DRIVE

otak Incorporated
17355 SW Boones Perry Rd.
Lake Oswego, OR 97035-5217
Phone: (503) 635-3618
FAX: (503) 635-5395
Internet: www.otak.com

14165 C165C403
Project No. Drawing No.
C4.3
Sheet No.

Copyright 2007 ©

LKO: CHADM 02/29/2008 3:03pm --> L:\PROJECT\14100\14165\DWG\C165C403.DWG

XREF LIST
Ltscale: 60
Resolved
C165X230
C165X001
0165X190

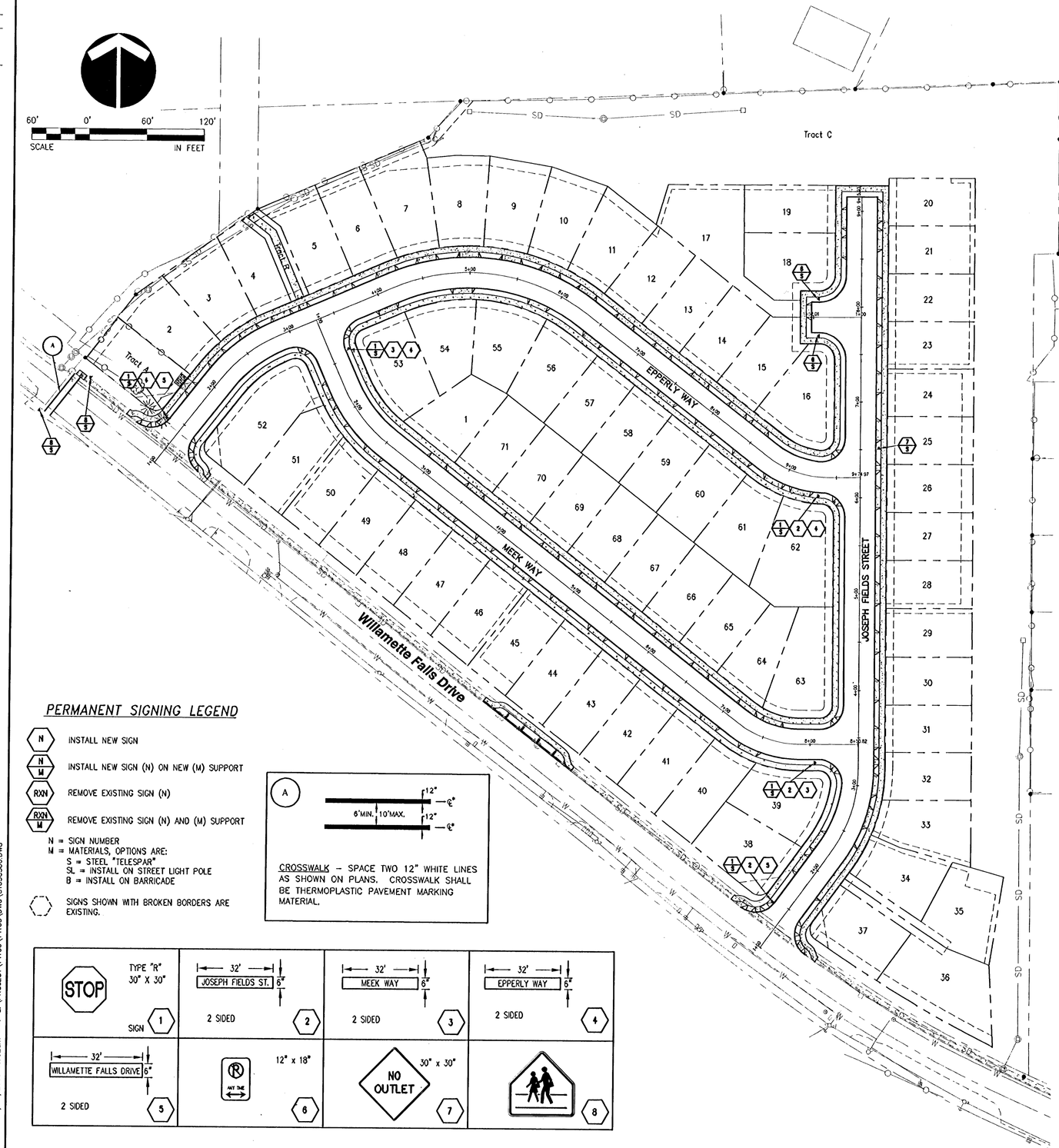

GENERAL SIGNING NOTES:

1) CITY OF WEST LINN SHALL SUPPLY AND INSTALL ALL SIGNS, AND IS RESPONSIBLE FOR STAKING SIGN LOCATIONS AND OBTAINING UTILITY LOCATES FOR STAKED SIGN LOCATIONS. SIGNS SHALL BE LOCATED PER TYPICAL SIGN LOCATION OR AS SHOWN ON PLANS. IT IS THE CITIES RESPONSIBILITY TO VERIFY THE FINAL STREET NAMES BEFORE ORDERING AND INSTALLING STREET NAME SIGNS.

2) DEVELOPER WILL COVER THE COST ASSOCIATED WITH THE INSTALLATION OF THE SIGNS AND STREET STRIPING.

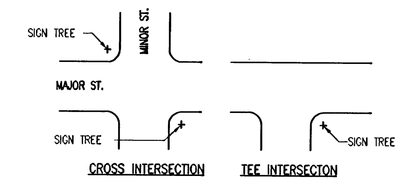

TYPICAL SIGN LOCATIONS
NTS

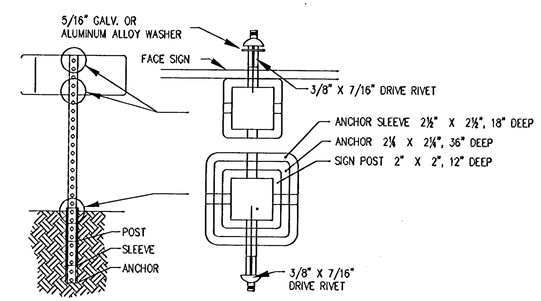

TYPICAL SIGN INSTALLATION
NTS

PERMANENT SIGNING LEGEND

- N — INSTALL NEW SIGN
- N/M — INSTALL NEW SIGN (N) ON NEW (M) SUPPORT
- RXN — REMOVE EXISTING SIGN (N)
- RXN/M — REMOVE EXISTING SIGN (N) AND (M) SUPPORT

N = SIGN NUMBER
M = MATERIALS, OPTIONS ARE:
S = STEEL "TELESPAR"
SL = INSTALL ON STREET LIGHT POLE
B = INSTALL ON BARRICADE

SIGNS SHOWN WITH BROKEN BORDERS ARE EXISTING.

CROSSWALK – SPACE TWO 12" WHITE LINES AS SHOWN ON PLANS. CROSSWALK SHALL BE THERMOPLASTIC PAVEMENT MARKING MATERIAL.

9" STREET NAME SIGN BLANKS
NTS

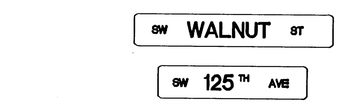

TYPICAL "STREET NAME" SIGN LAYOUT
NTS

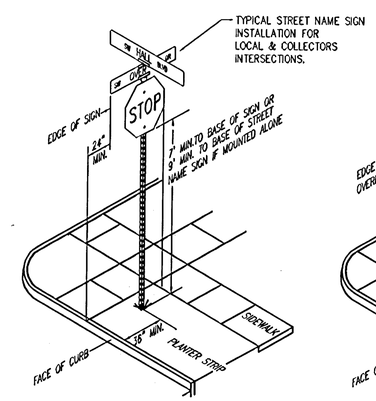

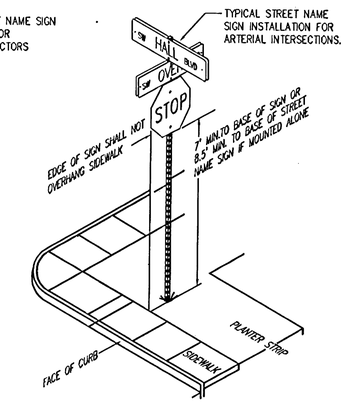

NO.	DATE	BY	REVISION COMMENTS

Design RCR/CLM Drawn LMB Checked PHM Date Initial issue Date:

RECORD DRAWING
BY:
DATE: 10/3/08
Permitted design drawings stamped by:
Mike A. Peebles
Engineer 16682
July 20, 1993

West Hills DEVELOPMENT
735 SW 158TH AVENUE
BEAVERTON, OR 97006

"AS BUILT" DRAWING
BY:
DATE

AS-BUILT PLAN RE-SUBMITTAL- MAY 30, 2008

ARBOR COVE

SIGNAGE AND STRIPING PLAN
SITE PLAN, LEGEND, AND DETAILS

otak Incorporated
17355 SW Boones Ferry Rd.
Lake Oswego, OR 97035-5217
Phone: (503) 635-3618
FAX: (503) 635-5395
Internet: www.otak.com

14165 C165C500
Project No. Drawing No.

C5.0
Sheet No.

Copyright 2007 ©

LKO: SARAHN 02/29/2008 10:02am --> L:\PROJECT\14100\14165\DWG\C165C500.DWG

XREF LIST
Ltscale: 100
Resolved
C165X001

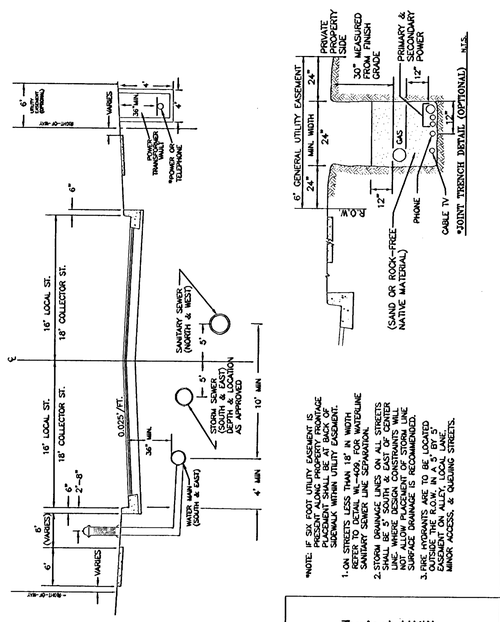

Typical Utility Placement Detail

West Linn	DATE: JAN 2000
	DRAWING NO. WL-500
	FILE NO. 00-500

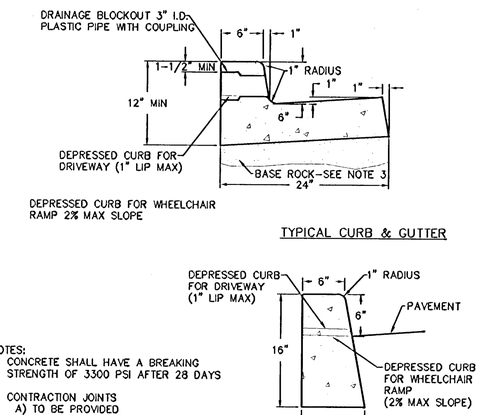

NOTES:
1. CONCRETE SHALL HAVE A BREAKING STRENGTH OF 3300 PSI AFTER 28 DAYS
2. CONTRACTION JOINTS
   A) TO BE PROVIDED
      -AT EACH POINT OF TANGENCY
      -AT EACH COLD JOINT
      -AT EACH SIDE OF INLET STRUCTURES
      -AT BOTH SIDES OF AN APPROACH
   B) SPACING TO BE NOT MORE THAN 15 FEET
   C) THE DEPTH OF THE JOINT SHALL BE AT LEAST 1/3 OF THE THICKNESS OF CONCRETE
   D) EXPANSION JOINTS SHALL NOT BE USED
3. BASE ROCK - 1-1/2"-0", 95% COMPACTION ROCK SHALL BE TO SUBGRADE OF THE STREET SECTION OR 4" IN DEPTH, WHICHEVER IS GREATER
4. DRAINAGE BLOCK - 3" DIA. PLASTIC PIPE
   A) DRAINAGE ACCESS THROUGH EXISTING CURBS SHALL BE DONE BY:
      -CORE DRILLING
      -VERTICAL SAWCUT OF CURB 18" EACH SIDE OF DRAIN AND RE-POURED TO FULL DEPTH OF CURB
5. STAMP TOP OF CURB WITH "W" AT WATER SERVICE CROSSING AND "S" AT SANITARY LATERAL CROSSING

Typical Curbs

West Linn	DATE: JAN 2000
	DRAWING NO. WL-501
	FILE NO. 00-501

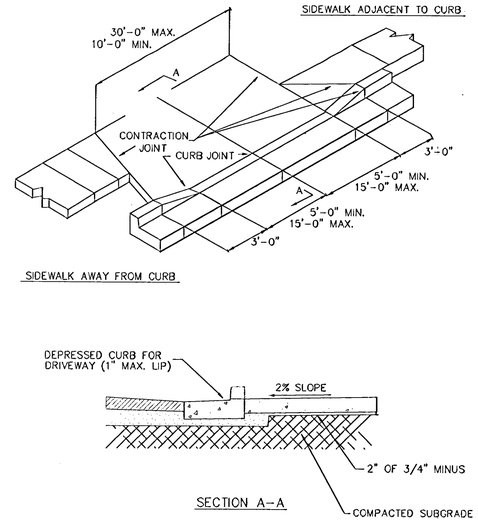

NOTES
1. CONCRETE SHALL HAVE A MINIMUM BREAKING STRENGTH OF 3300 PSI AFTER 28 DAYS, 6 SACK MIX.
2. CURB SHALL BE TROWELED JOINT WITH A MIN. 1/2" RADIUS ALONG BACK OF CURB.
3. DRIVEWAY SHALL BE A MINIMUM 6" THICK.

Residential Driveway

West Linn	DATE: JAN 2000
	DRAWING NO. WL-503
	FILE NO. 00-503

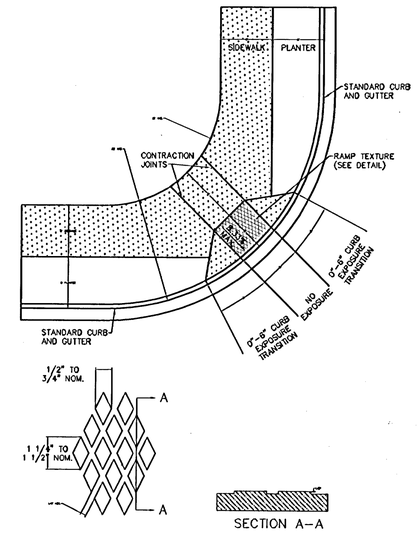

RAMP TEXTURE DETAIL

NOTES:
1. THE "AMERICANS WITH DISBILITIES ACT" (ADA) REQUIRES THAT ACCESS RAMPS TO SIDEWALKS CONFORM TO ALL FEDERAL GUIDE-LINES. EXCEPTIONS TO THE REQUIREMENTS IN THIS DRAWING MUST BE APPROVED BY THE CITY ENGINEER.
2. NO ABOVE GROUND UTILITIES ARE PERMITTED WITHIN RAMP AREA.
3. RAMP SURFACE SHALL BE TEXTURED WITH RAISED DIAMOND TEXTURE. TEXTURING SHALL BE DONE WITH AN EXPANDED METAL GRATE STAMPED INTO THE CONCRETE.
4. CONCRETE STRENGTH SHALL BE 3300 PSI.
5. PLACE CONTRACTION JOINTS AS SHOWN ABOVE.
6. WHEN EITHER OPPOSING CURB RAMP HAS AN EXISTING TWIN RAMP, USE DETAIL WL-507B.

Single Curb Ramp (For Use At Intersection of (2) Local Streets Only)

West Linn	DATE: JAN 2000
	DRAWING NO. WL-507A
	FILE NO. 00-507A

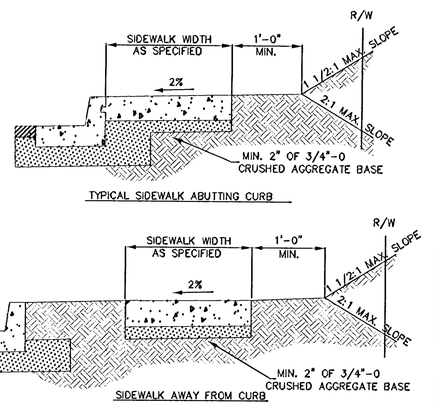

NOTES
1. CONCRETE SHALL BE 3300 PSI AT 28 DAYS, 6 SACK MIX, SLUMP RANGE OF 1 1/2" TO 3".
2. PANEL LENGTHS SHALL BE EQUAL TO THE SIDEWALK WIDTH, BUT MAY BE ADJUSTED WITH THE CITY ENGINEER'S APPROVAL.
3. CONTRACTION JOINTS (1/3RD OF THE THICKNESS OF CONCRETE) SHALL BE PLACED EVERY THIRD PANEL, WITH A MAX. SPACING OF 18 FEET.
   JOINTS SHALL ALSO BE PLACED AT THE SIDES OF DRIVEWAY APPROACHES, UTILITY VAULTS, AND WHEELCHAIR RAMPS.
4. A CURING COMPOUND SHALL BE USED. WHITE REFLECTIVE SHEETING SHALL BE USED IN CASE OF RAIN.
5. FOR SIDEWALKS ADJACENT TO THE CURB AND POURED AT THE SAME TIME AS THE CURB, THE JOINT BETWEEN THEM SHALL BE A TROWELED JOINT WITH A MIN. 1/2" RADIUS.
6. THE SIDEWALK SHALL HAVE A MIN. THICKNESS OF 6" IF MOUNTABLE CURB IS USED OR IF THE SIDEWALK IS INTENDED AS A PORTION OF THE DRIVEWAY. OTHERWISE, THE SIDEWALK SHALL HAVE A MIN. THICKNESS OF 4".
7. DRAIN BLOCKOUTS IN THE CURB SHALL BE EXTENDED TO THE BACK OF THE SIDEWALK WITH A 3" DIA. PLASTIC PIPE AT A 2% SLOPE. A CONTRACTION JOINT SHALL BE PLACED OVER THE PIPE.

Concrete Sidewalk Cross Section

West Linn	DATE: JAN 2000
	DRAWING NO. WL-508
	FILE NO. 00-508

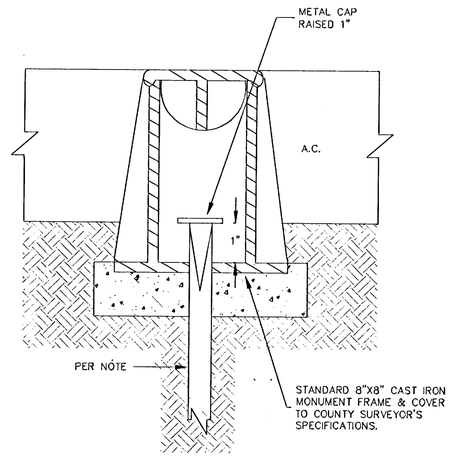

NOTES: ALL MONUMENTS SHALL USE EITHER 5/8" DIA.X 30" LONG IRON ROD OR 3/4" DIA.X 30" LONG IRON PIPE.

ALL MONUMENTS SHALL BE IN ACCORDANCE WITH ORS 209.250(4).

CONCRETE SHALL BE CLASS 3300.

FRAME AND COVER SHALL BE CAST IRON OR ALUMINUM.

COVER SHALL HAVE "MONUMENT" CAST INTO TOP.

Centerline Survey Monuments

West Linn	DATE: JAN 2000
	DRAWING NO. WL-513
	FILE NO. 00-513

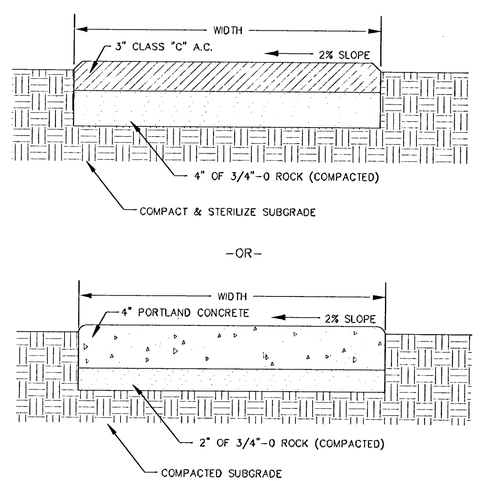

NOTES
1. CONCRETE SHALL BE 3300 PSI AT 28 DAYS, SIX SAC MIX, SLUMP RANGE OF 1 1/2"-3"
2. SIDEWALK PANELS SHALL BE SQUARE, 3/4" DEEP SCRIBES AT JOINTS, EDGED ON 4 SIDES AND HAVE A LIGHT BROOM FINISH.
3. PEDESTRIAN PATH OR BIKEWAY SHALL HAVE A MINIMUM WIDTH OF 5 FEET.

Pedestrian Path or Bikeway

West Linn	DATE: JAN 2000
	DRAWING NO. WL-510
	FILE NO. 00-510

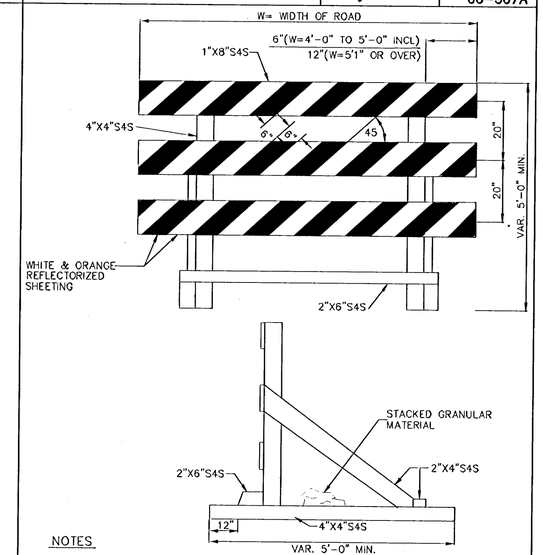

NOTES
1. ALL NON-REFLECTORIZED SURFACES SHALL BE PAINTED WHITE
2. ALTERNATE METHODS AND MATERIALS FOR THE SUPPORTS PERMITTED WITH APPROVAL OF THE ENGINEER
3. FOR RAILS LESS THAN 3' LONG 4" WIDE STRIPS SHALL BE USED
4. BARRICADES USED FOR PERMANENT CLOSURES SHALL HAVE RED AND WHITE REFLECTORIZED SHEETING.

Temporary Closure Street Barricades Type 3

West Linn	DATE: JAN 2000
	DRAWING NO. WL-515
	FILE NO. 00-515

NO.	DATE	BY	REVISION COMMENTS

Design RCR/CLM Drawn LMB Checked PHM Date Initial Issue Date:

RECORD DRAWING
BY: Mike Peebles
DATE: 6/3/08
Permitted design drawings stamped by:
Mike A. Peebles
Engineer 16682
July 20, 1993

West Hills DEVELOPMENT
735 SW 158TH AVENUE
BEAVERTON, OR 97006

"AS BUILT DRAWING"
BY Mike Peebles
DATE 6/3/08

AS-BUILT PLAN RE-SUBMITTAL- MAY 30, 2008

ARBOR COVE

SITE DETAILS
STREET DETAILS

otak Incorporated
17355 SW Boones Perry Rd.
Lake Oswego, OR 97035-5217
Phone: (503) 635-3618
FAX: (503) 635-5395
Internet: www.otak.com

14165 C165C600
Project No. Drawing No.
C6.0
Sheet No.

Copyright 2007 ©

LKO: SARAHN 02/29/2008 10:03am --> L:\PROJECT\14100\14165\DWG\C165C600.DWG

XREF LIST
Ltscale: 100
Resolved
C165X001
--Images--
WL-604

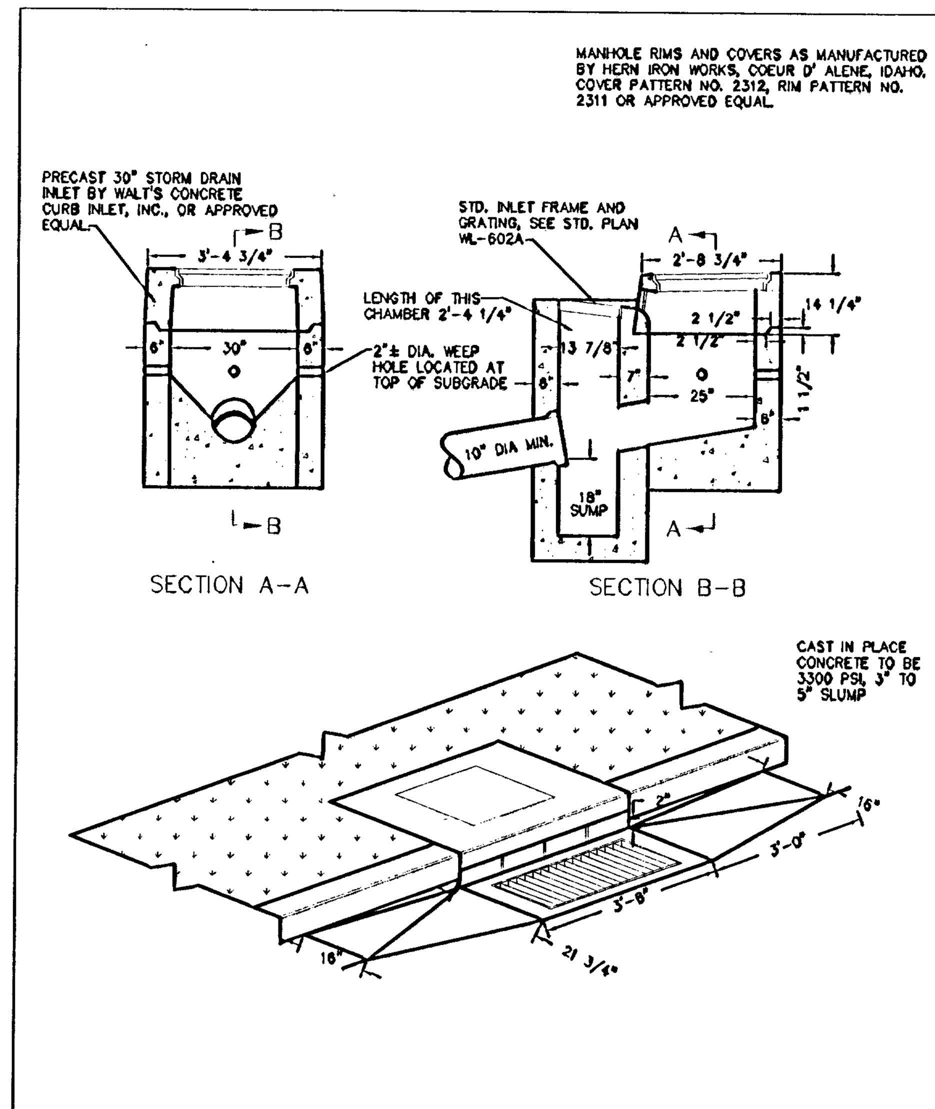

MANHOLE RIMS AND COVERS AS MANUFACTURED BY HERN IRON WORKS, COEUR D' ALENE, IDAHO. COVER PATTERN NO. 2312, RIM PATTERN NO. 2311 OR APPROVED EQUAL.

SECTION A-A   SECTION B-B

Combination Curb Inlet	DATE JAN 2000
	DRAWING NO. WL-601
	FILE NO. 00-601

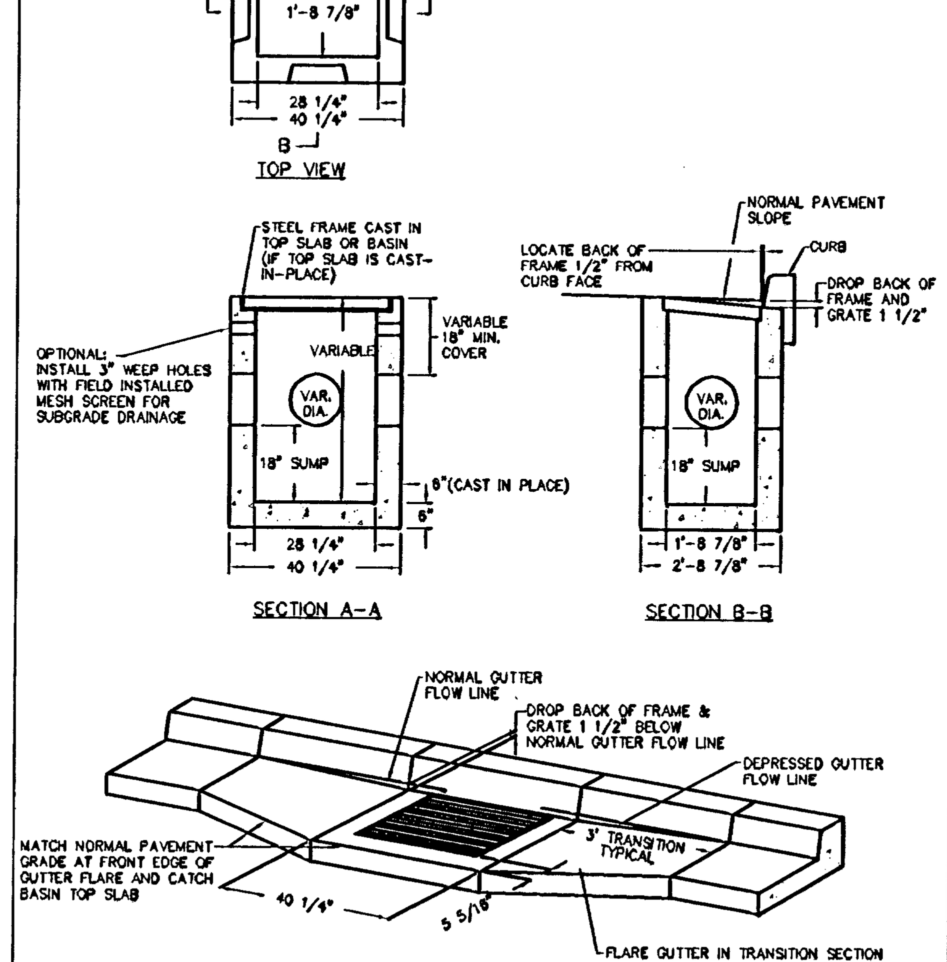

NOTES:
1. CONCRETE STRENGTH SHALL BE 3300 PSI.
2. PRECAST BASE WALLS SHALL BE A MINIMUM 4" THICK. CAST-IN-PLACE BASE WALLS SHALL BE 6" THICK.

NOTE: PRECAST TOP SLAB SHOWN WITH GUTTER TRANSITION FLARE IF THE TOP SLAB IS CAST-IN-PLACE, NO FLARE IS REQUIRED IN THE TRANSITION SECTION. MATCH THE TOP FRONT EDGE OF THE FRAME AND THE TOP FRONT EDGE OF THE CAST-IN-PLACE TOP SLAB TO THE NORMAL PAVEMENT GRADE.

Type G-1 Catch Basin with Sump	DATE JAN 2000
	DRAWING NO. WL-602
	FILE NO. 00-602

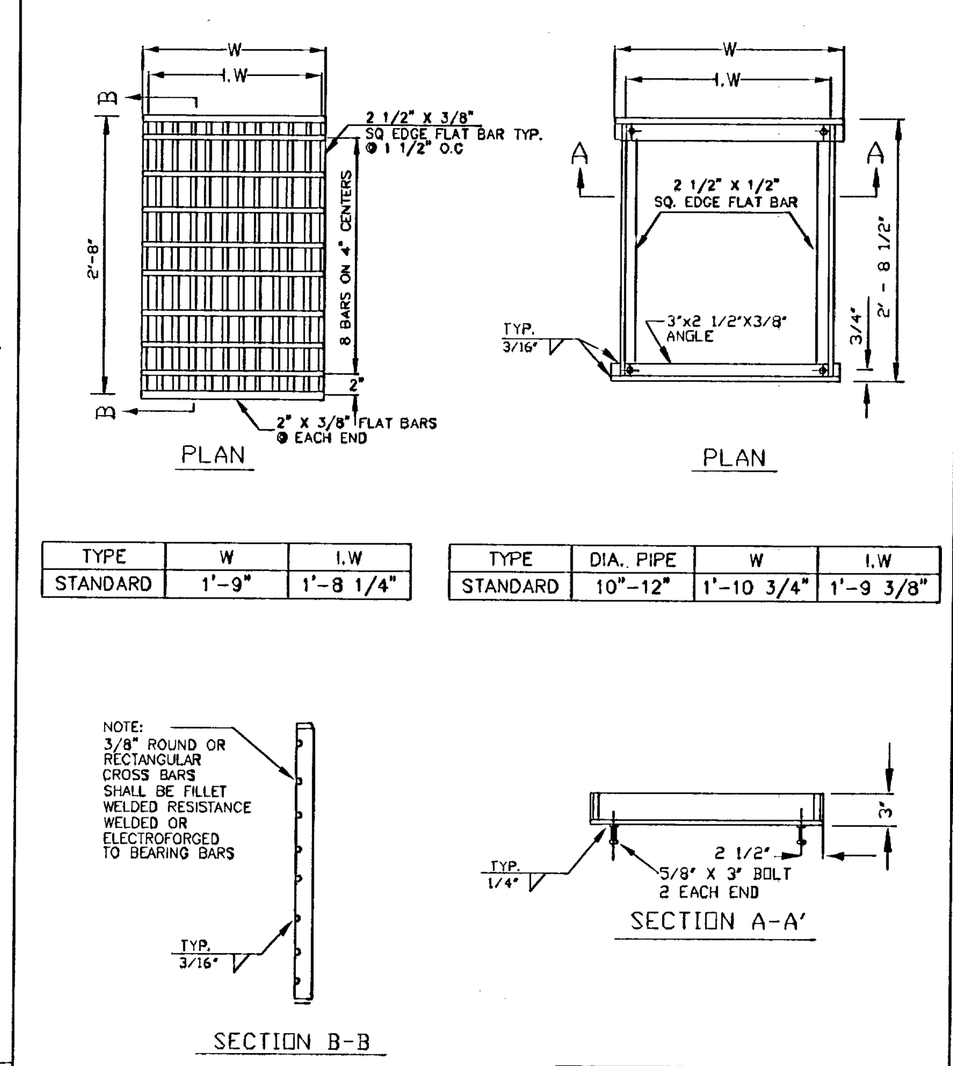

TYPE	W	I.W
STANDARD	1'-9"	1'-8 1/4"

TYPE	DIA. PIPE	W	I.W
STANDARD	10"-12"	1'-10 3/4"	1'-9 3/8"

NOTE: 3/8" ROUND OR RECTANGULAR CROSS BARS SHALL BE FILLET WELDED RESISTANCE WELDED OR ELECTROFORGED TO BEARING BARS.

SECTION B-B   SECTION A-A'

NOTE: USE VERTICAL BEADS IN CORNERS, FILLET WELD JOINT ON BOTTOM OF FRAME. GRATE MUST REST FLAT ON FRAME SURFACE.

Frame & Grate for Gutter & Curb Inlets	DATE JAN 2000
	DRAWING NO. WL-602A
	FILE NO. 00-602A

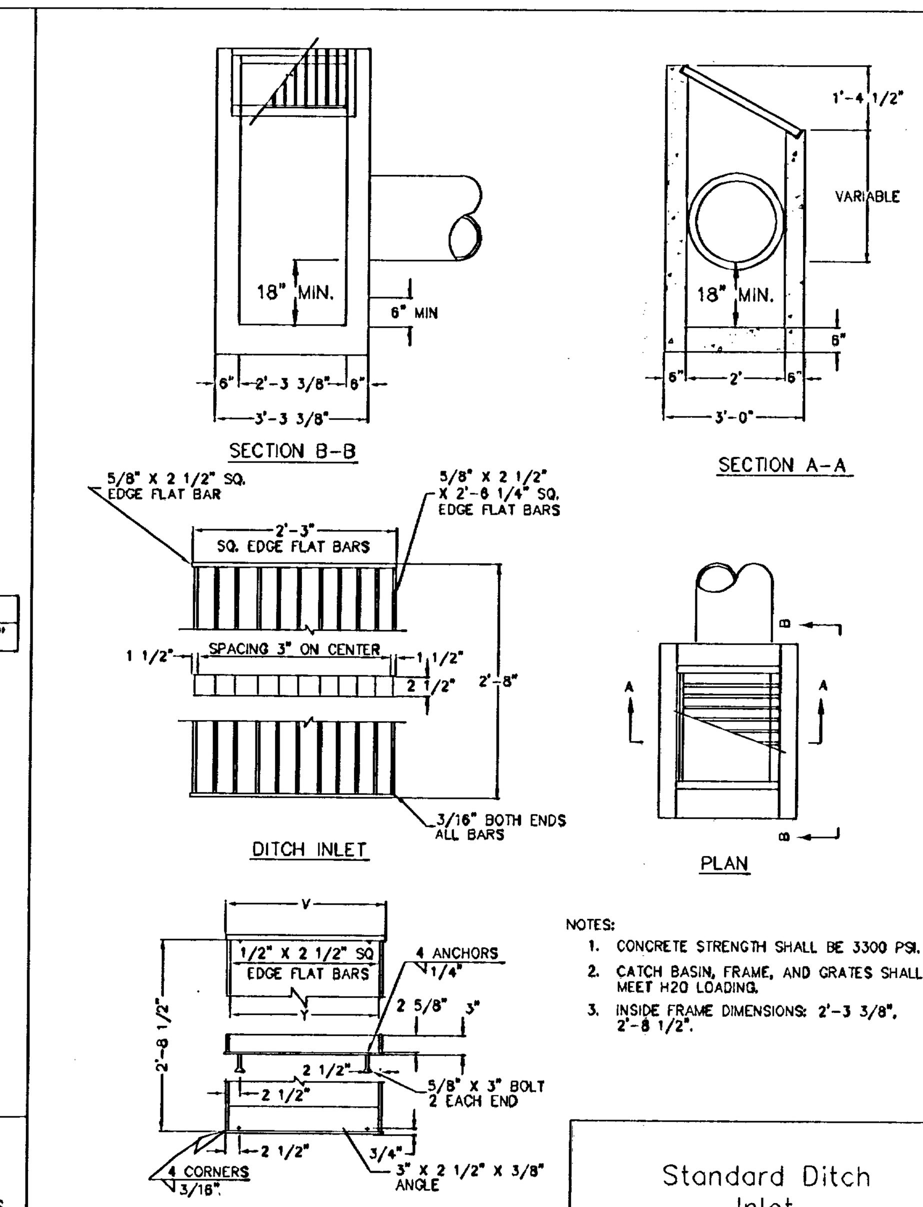

NOTES:
1. CONCRETE STRENGTH SHALL BE 3300 PSI.
2. CATCH BASIN, FRAME, AND GRATES SHALL MEET H20 LOADING.
3. INSIDE FRAME DIMENSIONS: 2'-3 3/8", 2'-8 1/2".

NOTE: 3/8" CROSS BARS SHALL BE FLUSH WITH THE GRATE SURFACE AND MAY BE FILLET WELDED, RESISTANCE WELDED OR ELECTROFORGED TO BEARING BARS.

DITCH INLET FRAME

INLET TYPE	V	Y	Y1	NO. OF BARS	TYPE
D	2'-4 3/4"	2'-3 3/8"	2'-3"	9	1

Standard Ditch Inlet	DATE JAN 2000
	DRAWING NO. WL-603
	FILE NO. 00-603

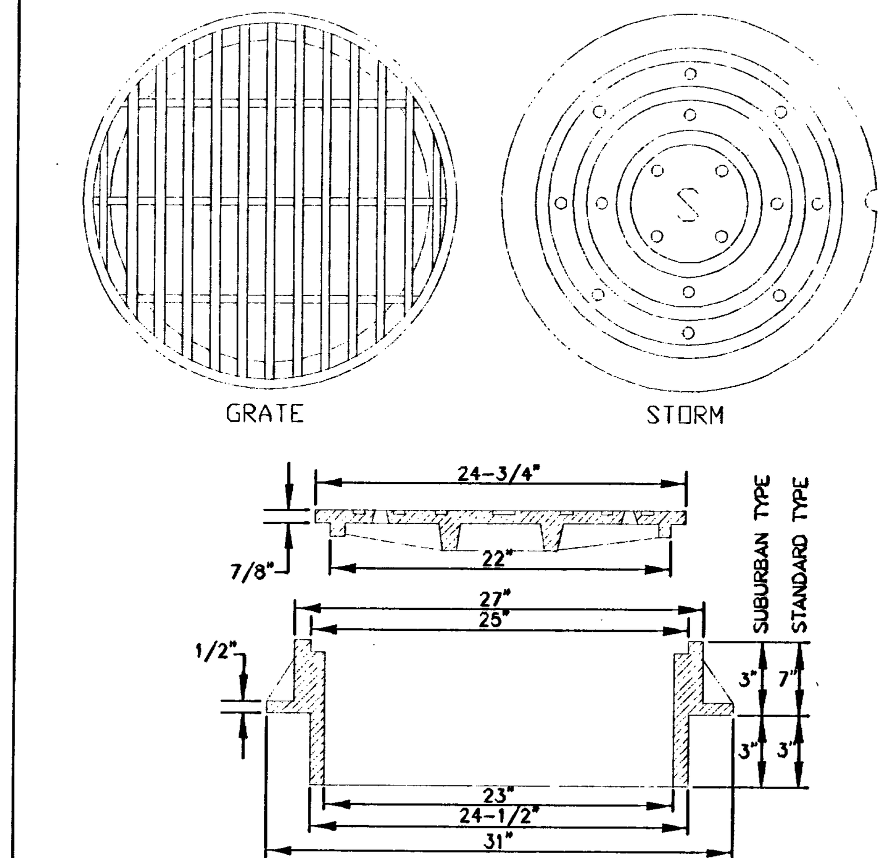

NOTES:
1. USE SUBURBAN TYPE ONLY IN NON-TRAFFIC AREAS, AND ONLY WITH APPROVAL BY THE CITY.
2. COVER AND FRAME SHALL BE GRAY CAST IRON ASTM A-48 CLASS 30.
3. COVER AND FRAME TO BE MACHINED TO A TRUE BEARING ALL AROUND.
4. NOTCH LID FOR LIFTING HOOK.
5. OPEN GRATES REQUIRE APPROVAL BY CITY, AND MUST BE BICYCLE SAFE IF USED IN TRAFFIC AREAS.

SUBURBAN AND STANDARD MANHOLE FRAME AND COVER

Manhole Covers	DATE JAN 2000
	DRAWING NO. WL-605
	FILE NO. 00-605

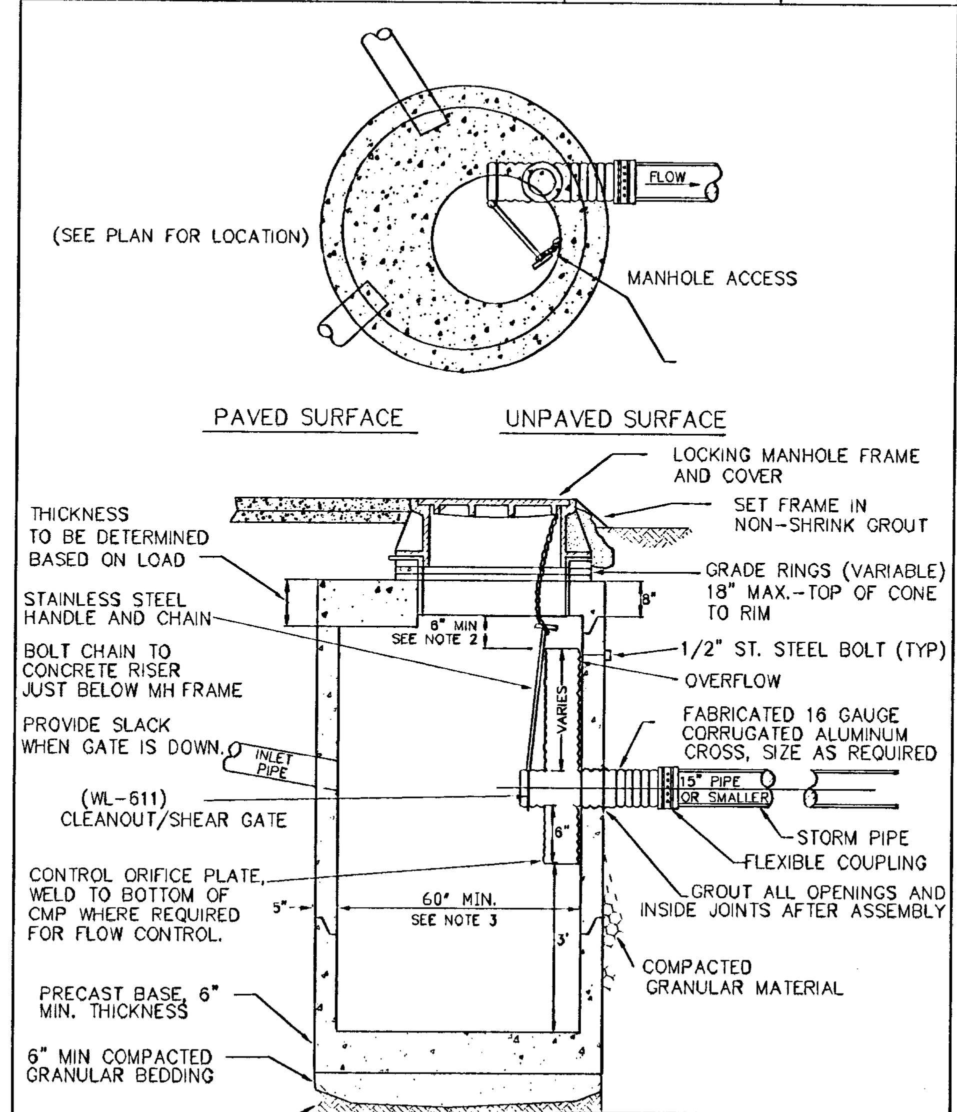

NOTES:
1. ALL PRECAST SECTIONS SHALL CONFORM TO THE REQUIREMENTS OF ASTM C-478.
2. DISTANCE FROM TOP OF OVERFLOW TO MH RIM SHALL BE BASED ON OVERFLOW CAPACITY CALC'S BY DESIGN ENGINEER. ASSUME ORIFICE CONTROL.
3. 72" MINIMUM DIA. MANHOLE REQUIRED FOR OUTLET OR INLET > 21".
4. NO STEPS REQUIRED

Pollution / Flow Control Manhole	DATE MAY 2005
	DRAWING NO. WL-607
	FILE NO. 00-607

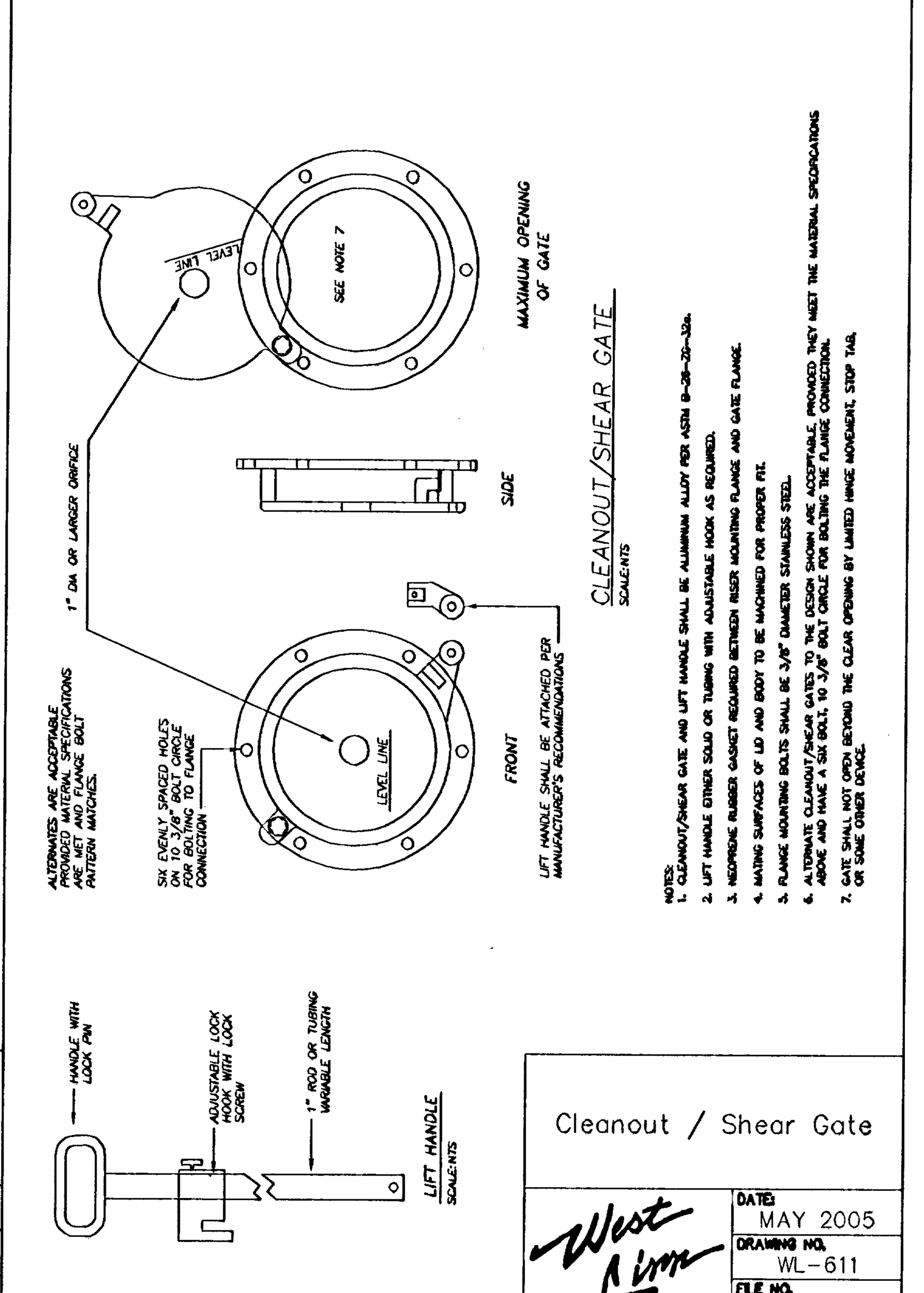

Cleanout / Shear Gate	DATE MAY 2005
	DRAWING NO. WL-611
	FILE NO. 00-611

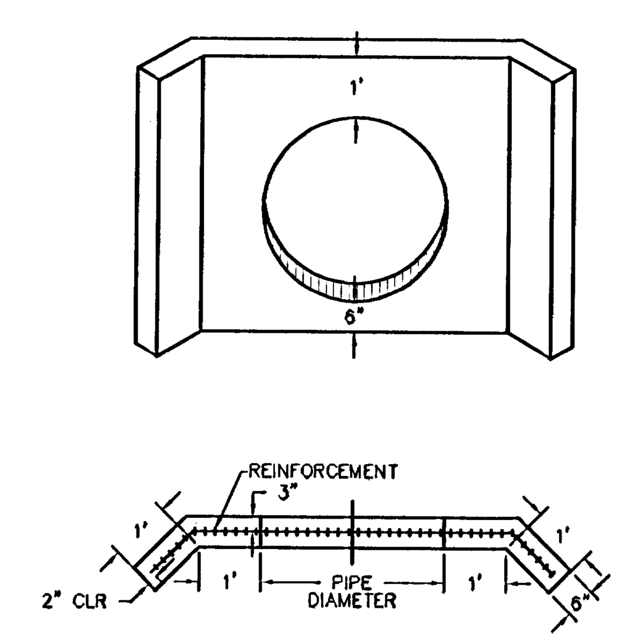

NOTES:
1. USE CONCRETE HAVING A 28 DAY DESIGN STRENGTH OF 3300 PSI.
2. OUTLET WING WALL SHALL BE USED FOR ALL OUTFALL PIPES FROM 10" TO 36".
3. THIS DETAIL REPRESENTS THE MINIMUM REQUIREMENT. THE NEED FOR ADDITIONAL STEEL, A FOOTING AND DRAINAGE BEHIND THE WALL SHALL BE INVESTIGATED BY THE DESIGN ENGINEER.
4. FOR PIPES LARGER THAN 33" OR MULTIPLE PIPE OUTLETS, USE DETAIL WL-612.
5. CONCRETE REINFORCEMENT SHALL CONSIST OF:
   A) ADDING A POLY-FIBER MESH TO THE CONCRETE MIX OR
   B) USE (2) #4 BARS ABOVE AND BELOW PIPE AND #4 BARS AT 6" O.C. VERTICALLY.

Outlet Headwall (For Outlet Pipes of 10" to 33")	DATE JAN 2000
	DRAWING NO. WL-613
	FILE NO. 00-613

D = PIPE DIAMETER
W = BOTTOM WIDTH OF CHANNEL
P = WETTED PERIMETER OF CHANNEL

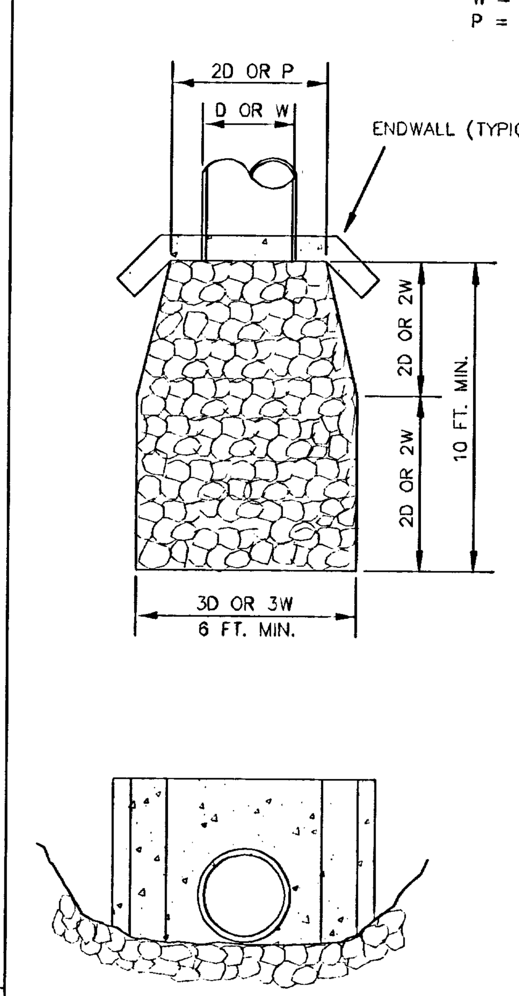

DESIGN VELOCITY FT./SEC	ROCK CLASSIFICATION BY WEIGHT
6 - 10	200 LBS.
10 - 12	1/4 TON
12 - 14	1/2 TON
14 - 16	1 TON
16 - 18	2 TON

SELECTION OF RIP RAP (SEE NOTE 1)

NOTES:
1. DIMENSIONS FOR RIP RAP APPLY TO FLOWS < 2 CFS RIP RAP FOR FLOWS > 2 CFS MUST BE DESIGNED BY AN ENGINEER FLOWS > 20 FPS SHALL USE ENERGY DISSIPATOR
2. TYPE OF RIP RAP
   A. REGULAR QUARRY STONE CLASS 50-200
   B. COBBLESTONE
   C. CONCRETE (ONLY ALLOWED UPON APPROVAL OF THE DISTRICT)
3. PLACEMENT
   A. MINIMUM DEPTH = 1 1/2 TIMES AVERAGE STONE SIZE
   B. ROCKS SHALL BE PLACED TO PROVIDE A MINIMUM OF VOIDS.
   C. SURFACE ROCKS OR CONCRETE SHALL PROTRUDE AT LEAST 1/2 THEIR VERTICAL DIMENSION.
   D. RIP RAP IS TO BE PLACED OVER A NATURAL BEDDING, OR IT MAY BE GROUTED OR PLACED OVER A GRAVEL BEDDING AS REQUIRED BY THE CITY.

Storm Sewer Outfall	DATE JAN 2000
	DRAWING NO. WL-614
	FILE NO. 00-614

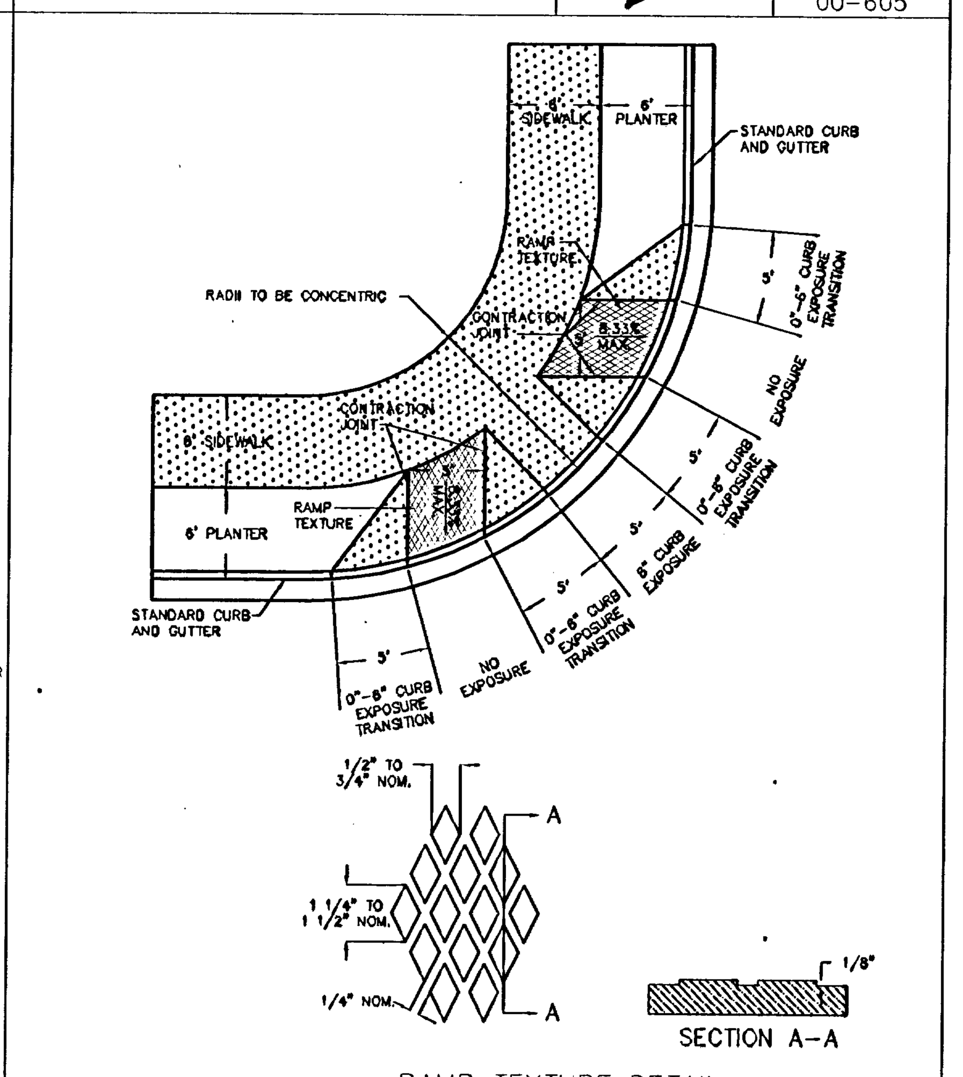

RAMP TEXTURE DETAIL

NOTES:
1. THE "AMERICANS WITH DISABILITIES ACT" (ADA) REQUIRES THAT ACCESS RAMPS TO SIDEWALKS CONFORM TO ALL FEDERAL GUIDELINES. EXCEPTIONS TO THE REQUIREMENTS IN THIS DRAWING MUST BE APPROVED BY THE CITY ENGINEER.
2. NO ABOVE GROUND UTILITIES ADRE PERMITTED WITHIN RAMP AREA.
3. RAMP SURFACE SHALL BE TEXTURED WITH RAISED DIAMOND TEXTURE. TEXTURING SHALL BE DONE WITH AN EXPANDED METAL GRATE STAMPED INTO THE CONCRETE.
4. CONCRETE STRENGTH SHALL BE 3300 PSI.
5. PLACE CONTRACTION JOINTS AS SHOWN ABOVE.
6. FOR INTERSECTING LOCAL STREETS USE DETAIL WL-507A.

Twin Curb Ramp	DATE JAN 2000
	DRAWING NO. WL-507B
	FILE NO. 00-507B

LKO: SARAHN 02/29/2008 10:03am --> L:\PROJECT\14100\14165\DWG\C165C601.DWG

AS-BUILT PLAN RE-SUBMITTAL- MAY 30, 2008

ARBOR COVE

SITE DETAILS
STREET AND STORM DETAILS

"AS BUILT DRAWING"

NO.	DATE	BY	REVISION COMMENTS

Design	Drawn	Checked	Date	Initial Issue Date:
RCK/CLW	LMB	PHM		

RECORD DRAWING
BY:
DATE: 6/3/08
Permitted design drawings stamped by:
Mike A. Peebles
Engineer 16682
July 20, 1993

West Hills
DEVELOPMENT
735 SW 158th AVENUE
BEAVERTON, OR 97006

otak
Incorporated
17355 SW Boones Ferry Rd.
Lake Oswego, OR 97035-5217
Phone: (503) 635-3618
FAX: (503) 635-5395
Internet: www.otak.com

14165 C165C601
Project No. Drawing No.
C6.1
Sheet No.

Copyright 2007 ©

XREF LIST
Ltscale: 20
Resolved
C165X001

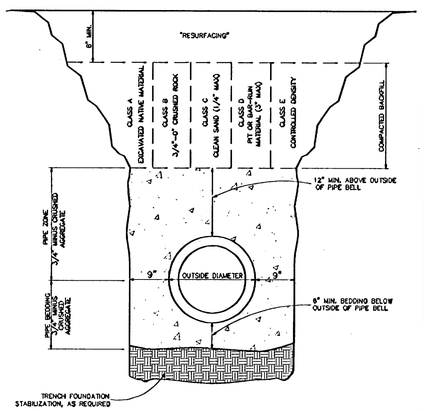

Trench Backfill, Bedding and Pipe Zone

West Linn | DATED JAN 2000 | DRAWING NO. WL-200 | FILE NO. 00-200

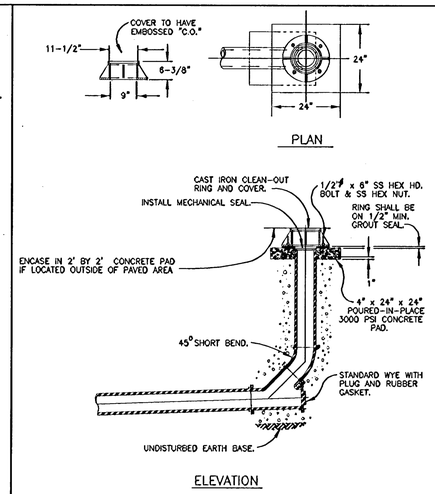

Standard Clean Out

West Linn | DATED MAY 2005 | DRAWING NO. WL-206 | FILE NO. 00-206

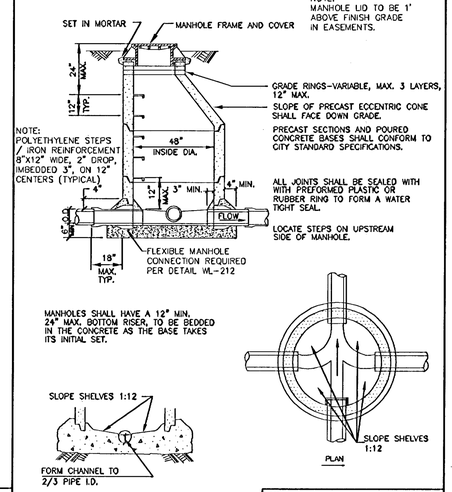

NOTE:
CHANNELS MUST BE ABLE TO PASS A 7"X30" CYLINDER INTO PIPES. SHELF SHALL NOT BE BELOW THE TOP OF THE PIPE.

Standard Manhole for Less than 36" Pipe

West Linn | DATED JAN 2000 | DRAWING NO. WL-207 | FILE NO. 00-207

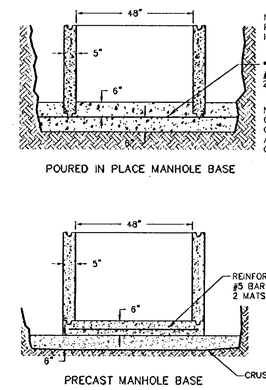

NOTE:
USE 3300 PSI CONCRETE FOR EITHER MANHOLE BASE.

Manhole Base
* MODIFIED PER CITY

West Linn | DATED JAN 2000 | DRAWING NO. WL-211 | FILE NO. 00-211

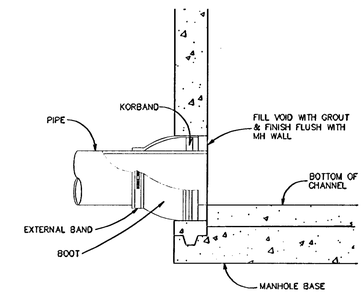

FLEXIBLE MANHOLE CONNECTION
(KOR-N-SEAL OR EQUAL)

Flexible Manhole Connection

West Linn | DATED JAN 2000 | DRAWING NO. WL-212 | FILE NO. 00-212

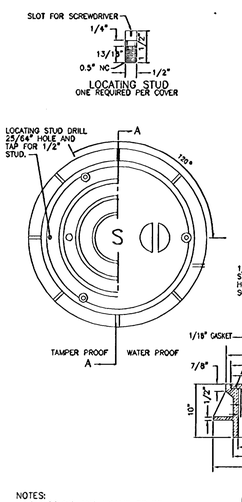

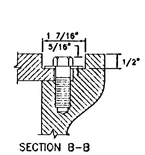

NOTES:
1. COVER AND FRAME TO BE MACHINED TO A TRUE BEARING ALL AROUND.
2. MATERIAL SHALL BE OF GRAY CAST IRON A.S.T.M. A-48 CLASS 30.
3. 2 HOLE LID FOR SANITARY SEWER
4. 18 HOLE LID FOR STORM SEWER

Waterproof and Tamperproof Manhole Frame and Cover

West Linn | DATED JAN 2000 | DRAWING NO. WL-214 | FILE NO. 00-214

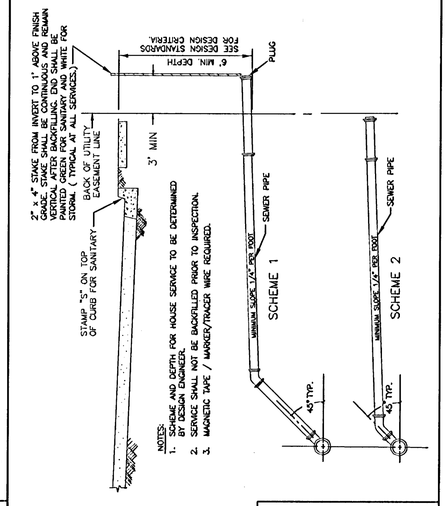

NOTES:
1. SCHEME AND DEPTH FOR HOUSE SERVICE TO BE DETERMINED BY DESIGN ENGINEER.
2. SERVICE SHALL NOT BE BACKFILLED PRIOR TO INSPECTION.
3. MAGNETIC TAPE / MARKER/TRACER WIRE REQUIRED.

Service Branch

West Linn | DATED JAN 2000 | DRAWING NO. WL-218 | FILE NO. 00-218

NOTES:
1. COVER AND FRAME TO BE MACHINED FOR TRUE BEARING.
2. MATERIAL SHALL BE GRAY CAST IRON A.S.T.M. A-48 CLASS 30.
3. TWO HOLE LID FOR SANITARY SEWER.
4. 18 HOLE LID FOR STORM SEWER.

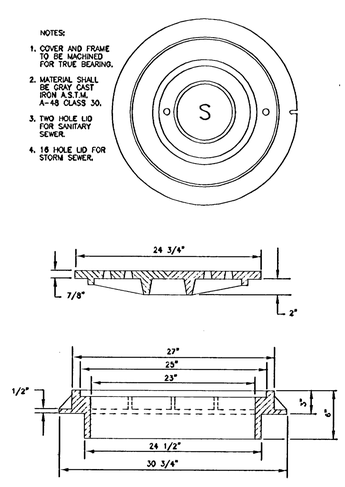

Suburban Manhole Frame and Cover 3" Depth

West Linn | DATED JAN 2000 | DRAWING NO. WL-300 | FILE NO. 00-300

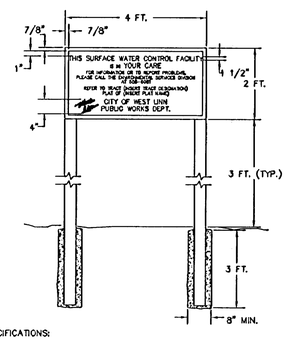

SPECIFICATIONS:
SIZE: 48" BY 24"
MATERIAL: GRADE "B" OR BETTER EXTERIOR PLYWOOD
PAINT: FACE - 3 COATS OUTDOOR ENAMEL (SPRAYED).
BACK - 1 COAT OUTDOOR ENAMEL (SPRAYED).
LETTERING: SILK SCREEN ENAMEL WHERE POSSIBLE, OR HAND PAINTED ENAMELS.
COLORS: BLACK AND WHITE. WHITE BACKGROUND, LETTERING AND BORDER IN BLACK
TYPE FACE: HELVETICA. 1 1/2" TALL WITH 7/8" SPACING BETWEEN LETTERS AND OUTER BORDER. OUTER BORDER 1/2" WIDTH
INSTALLATION: SECURED TO CHAIN LINK FENCE IF AVAILABLE, OTHERWISE INSTALL ON TWO 8 FT. LONG 4" X 4" POSTS, PRESSURE TREATED, INSTALLED IN 3 FT. DEEP CONCRETE FILLED POST HOLES (8" MIN. DIA.)

Surface Water Facility Sign

West Linn | DATED JAN 2000 | DRAWING NO. WL-615 | FILE NO. 00-615

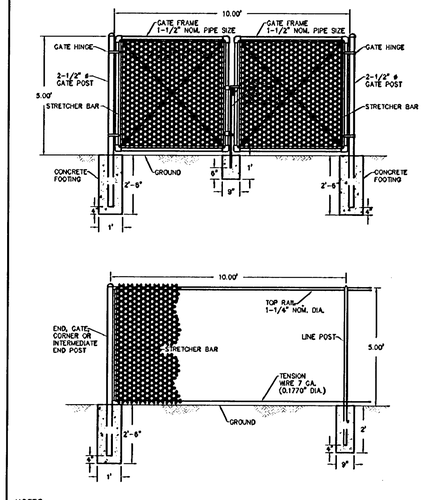

NOTES:
1. BLACK POWDER COATING ON ALL HARDWARE AND ACCESSORIES IS REQUIRED.
2. ALL MATERIAL AND WORKMANSHIP SHALL BE IN ACCORDANCE WITH THE CURRENT STATE OF OREGON STANDARD SPECIFICATIONS FOR HIGHWAY CONSTRUCTION.

Surface Water Facility Fence

West Linn | DATED JAN 2000 | DRAWING NO. WL-616 | FILE NO. 00-616

NO.	DATE	BY	REVISION COMMENTS
Design	Drawn	Checked	Date	Initial Issue Date:
RCR/CLM	LMB	PHM	

RECORD DRAWING
BY: [signature]
DATE: 12/3/08
Permitted design drawings stamped by:
Mike A. Peebles
Engineer 16682
July 20, 1993

West Hills DEVELOPMENT
735 SW 158TH AVENUE
BEAVERTON OR 97006

"AS BUILT DRAWING"
BY [signature]
DATE 12/3/08

AS-BUILT PLAN RE-SUBMITTAL- MAY 30, 2008

ARBOR COVE

SITE DETAILS
STORM AND SANITARY DETAILS

otak Incorporated
17355 SW Boones Perry Rd.
Lake Oswego, OR 97035-5217
Phone: (503) 635-3618
FAX: (503) 635-5395
Internet: www.otak.com

14165 C165C602
Project No. Drawing No.
C6.2
Sheet No.

Copyright 2007 ©

LKO: SARAHN 02/29/2008 10:04am --> L:\PROJECT\14100\14165\DWG\C165C602.DWG

XREF LIST
Ltscale: 100
Resolved
C165X001

NOTES:

1. HYDRANTS TO BE MUELLER CENTURION MDL A-423 ONLY WITH 1 1/2" OPER. NUTS OR CLOW MEDDALION F-2545.
2. HYDRANT COLOR TO BE MILLER EQUIP. ENAMEL O E 40 (SAFETY YELLOW).
3. JOINTS TO BE RESTRAINED BY 3/4" DIA. GALVANIZED STEEL RODS AND THRUST BLOCKS OR MEGA LUGS AND THRUST BLOCKS.
4. ALL FITTINGS IN CONTACT W/CONCRETE SHALL BE WRAPPED IN PLASTIC. HYDRANT DRAIN HOLES TO REMAIN OPEN TO DRAIN ROCK AND OPERATIONAL.
5. MIN. 4 CU. FT. OF 1 1/2"-3/4" CLEAN DRAIN ROCK SHALL BE PLACED AROUND SHOE UP TO A MIN. OF 6" ABOVE DRAIN OUTLETS.
6. WHERE PLANTER STRIP EXISTS, HYDRANT SHALL BE PLACED SO FRONT PORT IS A MINIMUM OF 24" BEHIND FACE OF CURB.
7. WHERE INTEGRAL S/W & CURB EXISTS, HYD. SHALL BE PLACED AT BACK OF SIDEWALK, OR AS DIRECTED BY ENGINEER.
8. BURY OF HYDRANT SHALL BE MEASURED FROM FINISHED GRADE TO BOTTOM OF CONNECTING PIPE.
9. THRUST BLOCK AT FIRE HYDRANT TEE SHALL HAVE A 3.7 SQ. FT. BEARING AREA.
10. HYDRANT VALVE SHALL BE MUELLER RESILIENT WEDGE GATE VALVE #A-2360-16 ONLY.
11. WHERE NO SIDEWALK EXISTS, PLACE A 5'x 5'x 4" THICK A.C. OR CONC. APRON AROUND HYDRANT.
12. NO EXTENTIONS ALLOWED.

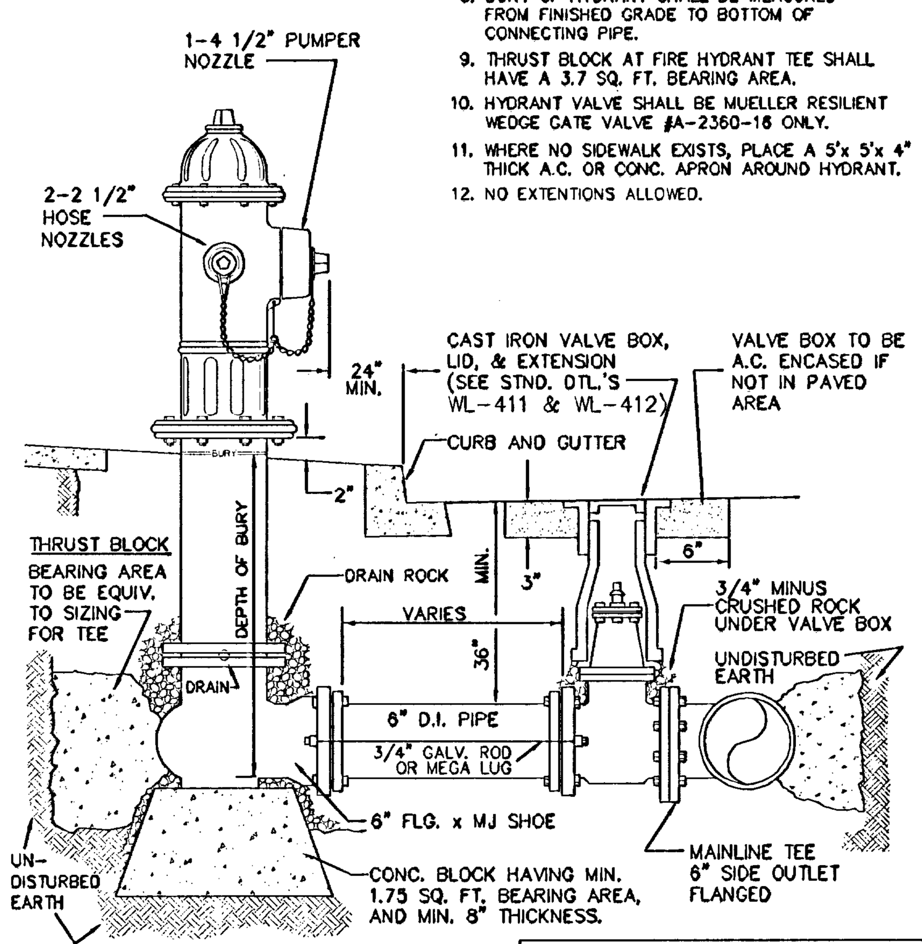

Standard Fire Hydrant Assembly

DATE: JAN 2000
DRAWING NO. WL-401
FILE NO. 00-401

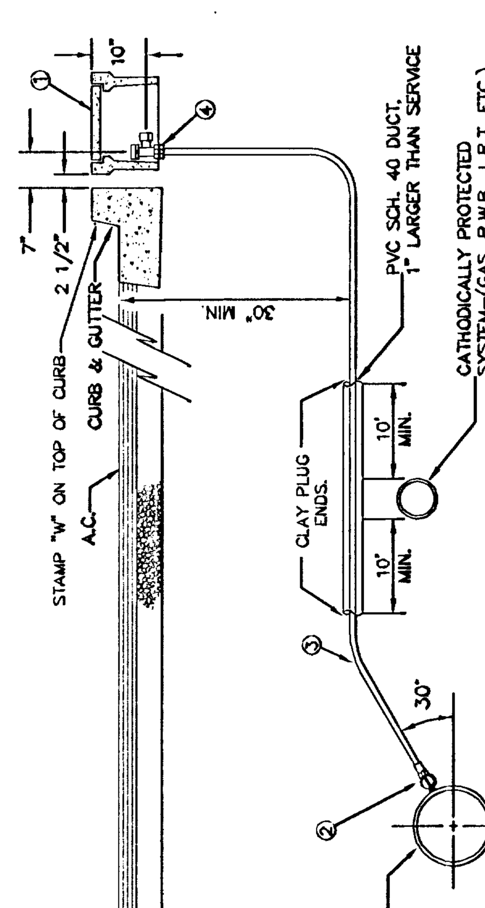

MATERIALS:

1. BROOKS METER BOX, BODY NO. 37, LID AND COVER NO. 37–S.
2. MUELLER CORP. STOP NO. H–15008 OR FORD F1000–4Q SET CORP. STOP WITH OPERATING NUT AT 3 OR 9 O'CLOCK.
3. 1" SOFT TEMPER, TYPE 'K' COPPER TUBING COMPLYING WITH ASTM B–88.
4. MUELLER ANGLE METER STOP NO. H–14258 (FORD NO. KV43–444W–Q).

NOTES:

1. MACHINE DRILLED AND TAPPED ONLY. NO HAND DRILLING IS ALLOWED.
1. SUBSTITUTES FOR ANY MATERIALS SHOWN SHALL BE APPROVED BY THE CITY ENGINEER.
2. ALL PIPE AND STRUCTURE ZONES SHALL BE BACKFILLED USING 3/4" MINUS CRUSHED AGG. AND COMPACTED TO 95% MAX DENSITY AS DETERMINED BY AASHTO T–180.
3. WHEN AN ACTIVE CATHODIC PROTECTED SYSTEM IS ENCOUNTERED, SCH. 40 PVC SHALL BE INSTALLED AS SHOWN ABOVE WITH CLAY PLUG.
4. METER BOX SHALL BE CENTERED OVER THE COMPLETED METER ASSEMBLY.
5. FOR VACANT RESIDENTIAL LOTS, LOCATE SINGLE SERVICE 18" INSIDE SIDE LOT LINE.
6. TAPS INTO MAIN TO BE AT 18" CENTERLINE MIN.
7. ANGLE METER STOPS TO BE 18" FROM PROPERTY LINE AND NOT IN DRIVEWAY APPROACH.

Standard 1" Water Service

DATE: MAY 2005
DRAWING NO. WL-402
FILE NO. 00-402

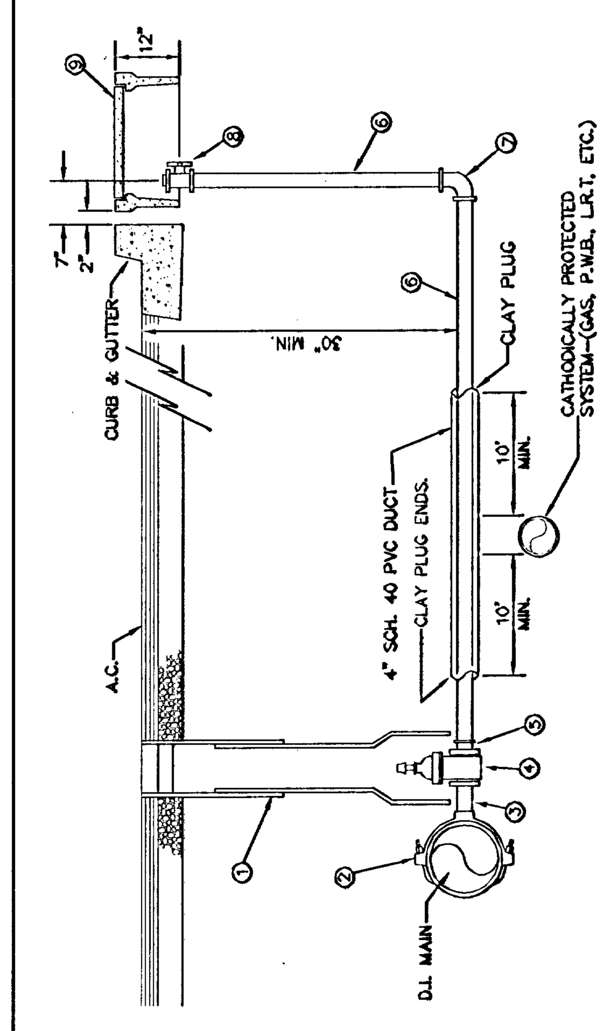

MATERIALS:

1. CAST IRON VALVE BOX AND LID (SEE STND DTL NO. 411)
2. PIPE O.D. X 2" TEE OR ROCKWELL NO. 317 SREVICE SADDLE WITH STASTRAPS.
3. 2" X 6" BRASS I.P.T. NIPPLE
4. 2" I.P.T. X I.P.T. GATE VALVE WITH RESILIENT WEDGE
5. 2" X 3" I.P.T. X MUELLER 110 COMP. COUPLING
6. 2" ASTM B–88 TYPE 'K' COPPER TUBING. SOFT TEMPER WITH FLARE FITTINGS WILL NOT BE APPROVED.
7. 2" 90 DEGREE ELL, MUELLER 110 CTS COMPRESSION
8. 1 1/2"–2" ANGLE METER STOP, MUELLER NO. 14276 OR 14277, FORD NO. FV23–777W
9. BROOKS METER BOX, BODY NO. 65 (2"), LID & COVER NO. 65–S (2")

NOTES:

1. SUBSTITUTES FOR ANY MATERIALS SHOWN SHALL BE APPROVED BY THE CITY ENGINEER.
2. ALL PIPE AND STRUCTURE ZONES SHALL BE BACKFILLED USING 3/4" MINUS CRUSHED AGG. AND COMPACTED TO 95% MAX. DENS. AS DETERMINED BY ASHTO T–180.
3. WHEN AN ACTIVE CATHODIC PROTECTED SYSTEM IS ENCOUNTERED, SCH. 40 PVC SHALL BE INSTALLED AND SHOWN WITH CLAY PLUG.
4. METER BOX SHALL BE CENTERED OVER THE COMPLETED METER AND FITING ASSEMBLY.
5. CUSTOMER SHALL INSTALL AN APPROVED BACKFLOW PREVENTION DEVICE.

Standard 1 1/2" – 2" Single Service

DATE: JAN 2000
DRAWING NO. WL-403
FILE NO. 00-403

NOTES:

1. VALVE BOX SHALL BE PER STANDARD DETAIL WL–411.
2. VALVE BOX TO BE CONCRETE ENCASED AS SHOWN, IF NOT IN PAVED AREA.
3. BLOW–OFF UNIT SHALL BE BACKFILLED WITH 3/4"–0" CRUSHED ROCK AND COMPACTED TO 95% OF MAX. DENSITY DETERMINED BY AASHTO T–180.
4. PLACE BLOW–OFF STANDPIPE 3 FT. INSIDE R.O.W. LINE AT END OF STREET (2 FT. FROM BARRICADE).

BLOW–OFF SIZES REQUIRED

MAIN SIZE	BLOW–OFF SIZE
4" TO 6"	2"
8" TO 12"	4"
14" TO 18"	6"
20" & UP	PER ENGR.

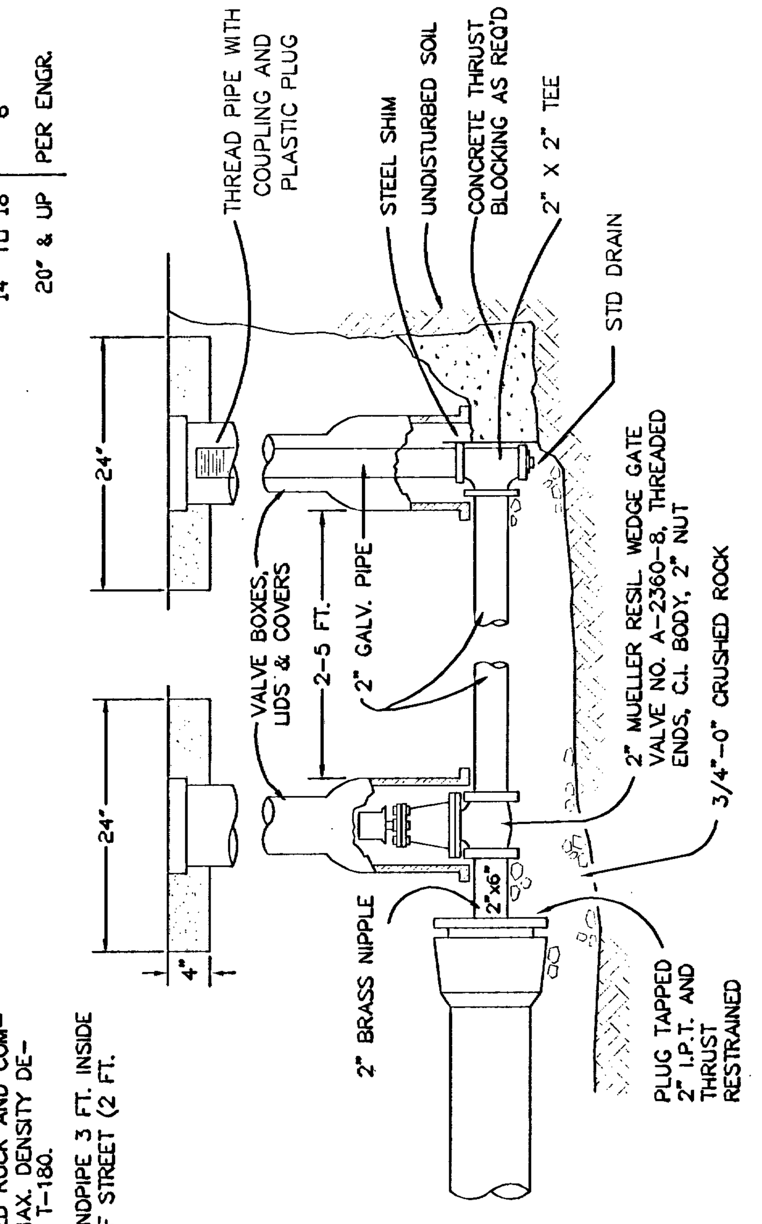

Standard 2" Blow–off Assembly

DATE: MAY 2005
DRAWING NO. WL-404A
FILE NO. 00-404A

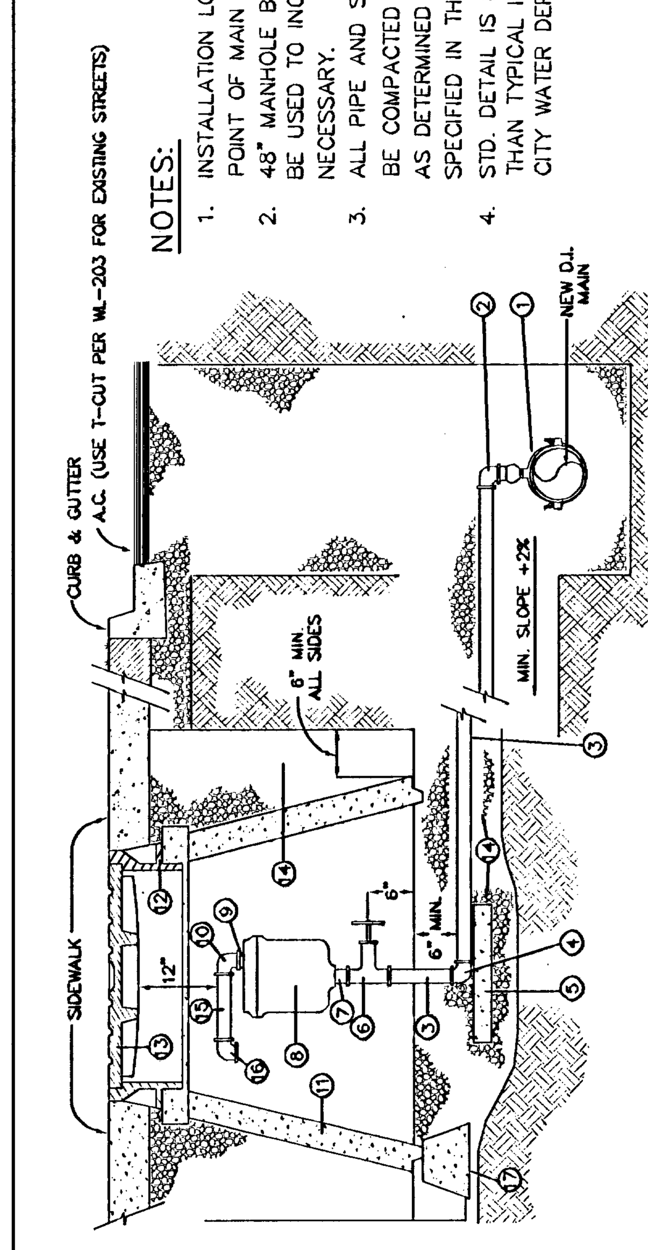

NOTES:

1. INSTALLATION LOCATED AT HIGH POINT OF MAIN
2. 48" MANHOLE BARREL SECTIONS SHALL BE USED TO INCREASE DEPTH IF NECESSARY.
3. ALL PIPE AND STRUCTURE ZONES SHALL BE COMPACTED TO 95% OF MAX. DENSITY AS DETERMINED BY AASHTO T–180 OR AS SPECIFIED IN THE CONTRACT DOCUMENTS.
4. STD. DETAIL IS NOT FOR SHALLOWER THAN TYPICAL INSTALLATIONS. CONTACT CITY WATER DEPT. FOR OPTIONS.

MATERIALS:

1. ROCKWELL NO. 317 SERVICE SADDLE WITH STAINLESS STRAPS
2. MUELLER NO. H15045 2" CORPORATION STOP WITH 1/4 BEND ADAPT (I.P.T. MUELLER 110 CTS)
3. 2" X VARIABLE LENGTH BRASS I.P.T. NIPPLE
4. 2" BRASS 90 DEGREE ELL (MUELLER 110 CTS)
5. 12" X 12" X 4" CONCRETE BLOCK
6. NIBCO NO. 113 2" BRASS GATE VALVE
7. 2" X 3" BRASS I.P.T. NIPPLE
8. 2" AIR RELEASE VALVE (VAL–MATIC #38 OR APCO #205 FOR TYPICAL INSTALLATIONS, IN SOME INSTANCES THE CITY MAY REQUIRE COMBINATION AIR RELEASE & VACUUM UNIT.) INSTALL WALL BRACKETS TO SUPPORT VALVE AS NECESSARY.
9. 1/2" X 1 1/2" OR 2" X 1 1/2" BRASS I.P.T. NIPPLE
10. 1/2" OR 2" BRASS 90 DEGREE ELL (F.M. I.P.T. X F.M. I.P.T.)
11. STD. 48" CONCRETE MANHOLE CONE
12. FRAME PER STD. DWG. WL–214.
13. TAMPERPROOF MANHOLE COVER PER STD. DWG. WL–214.
14. 3/4" MINUS CRUSHED AGG.
15. 1/2" X 6" OR 2" X 6" BRASS NIPPLE, I.P.T.
16. 1/2" OR 2" BRASS 90 DEGREE ELL WITH SCREEN ON OUTLET
17. 3 EA. 12" CONCRETE PIER BLOCKS

Standard Air Release Valve Unit

DATE: JAN 2000
DRAWING NO. WL-405
FILE NO. 00-405

FITTING SIZE (Inches)	TEE, WYE, & ① HYDRANTS	STRADDLE BLOCK ②	90° BEND ③ PLUGGED CROSS TEE PLUGGED–RUNS	45° BEND ④	22 1/2° BEND ④	11 1/2° BEND ④
2	*	*	*	*	*	*
4	1.7	2.1	2.4	1.3	*	*
6	3.7	4.9	5.3	2.9	1.5	*
8	6.7	8.7	9.5	5.1	2.7	1.3
10	10.5	13.6	14.8	8	4.1	2
12	15.1	19.6	21.3	11.6	5.9	2.9
14						
16	26.8	34.8	37.9	20.5	10.4	5.2
18	33.9	44	47.9	25.9	12.8	6.7
LARGER	* *	* *	* *	* *	* *	* *
BEARING AREA OF THRUST BLOCKS (sq. ft.)						

1. ALL VALUES ARE BASED ON THE FOLLOWING ASSUMPTIONS: AVG. PRESSURE = 100 PSI X 2 (safety factor); 1500 PSF SOIL BEARING CAPACITY; NORMAL DISTRIBUTION DESIGN VELOCITY NOT TO EXCEED 5 F/S.
2. ALL FITTINGS SHALL BE WRAPPED IN PLASTIC PRIOR TO PLACEMENT OF CONCRETE.
3. BEARING SURFACE OF THRUST BLOCKING SHALL BE AGAINST UNDISTURBED SOIL
4. ALL CONCRETE MIX SHALL HAVE A MIN. 28 DAY STRENGTH OF 3000 PSI.
5. ALL PIPE ZONES SHALL BE GRAVEL FILLED AND COMPACTED.
6. THRUST BLOCKS FOR PLUGGED CROSS AND PLUGGED TEE SHALL HAVE #4 REBAR LIFTING LOOPS INSTALLED AS SHOWN.
7. VERTICAL THRUST DETAILS–SEE DWG. WL–407.
8. STRADDLE BLOCK DETAILS–SEE DWG. WL–408.

* BLOCK TO UNDISTURBED TRENCH WALLS

** THRUST BLOCKS FOR PIPES LARGER THAN 18" WILL BE INDIVIDUALLY DESIGNED BY THE ENGINEER.

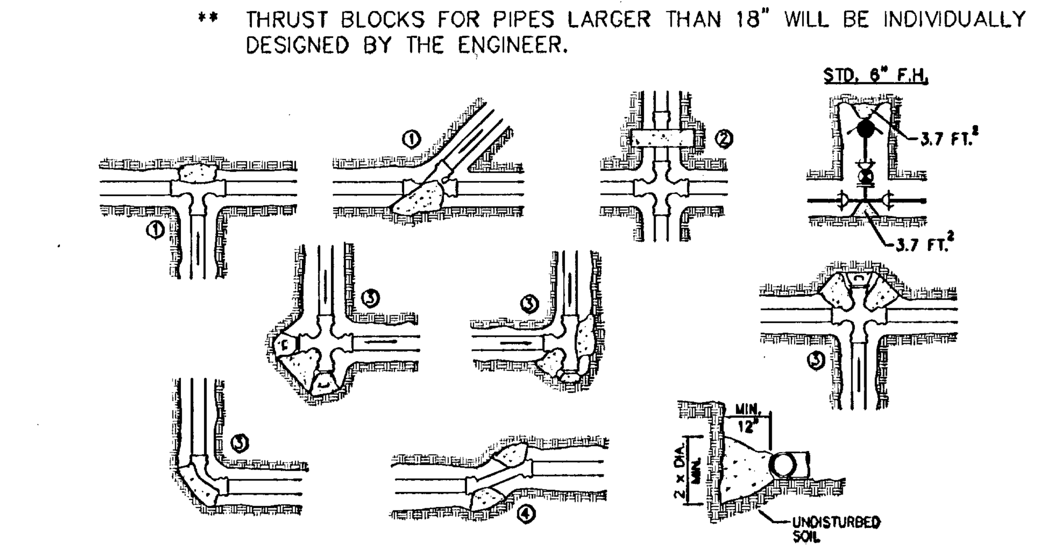

Horizontal Thrust Blocking

DATE: JAN 2000
DRAWING NO. WL-406
FILE NO. 00-406

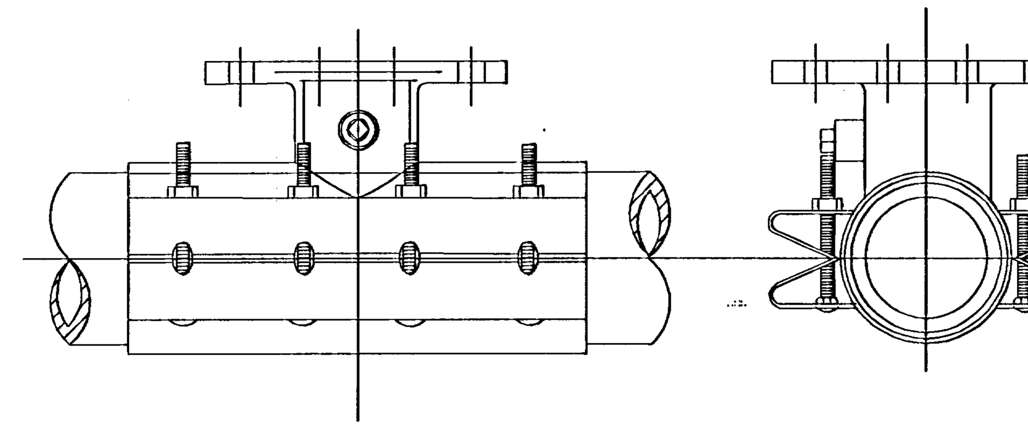

FRONT VIEW

SIDE VIEW

NOTES:

1. WATER MAIN SHALL BE CLEANED BEFORE ATTACHING SLEEVE.
2. SLEEVE AND VALVE SHALL BE PRESSURE TESTED BEFORE MAKING TAP.
3. PRESSURE TEST AND TAP SHALL BE MADE IN THE PRESENCE OF AN AUTHORIZED CITY REPRESENTATIVE.
4. PROPER TAPPING MACHINE SHALL BE USED TO MAKE TAP.
5. THRUST BLOCKING REQUIREMENTS SHALL BE DETERMINED BY THE ENGINEER OR PER DWG. WL–406.
6. TAP SHALL BE MADE NO CLOSER THAN 18 INCHES FROM THE NEAREST JOINT.
7. SLEEVE AND VALVE SHALL BE WRAPPED WITH 8 MIL PLASTIC.
8. SLEEVES TO BE USED ARE JCM OR MUELLER STAINLESS STEEL TAPPING SLEEVES. ALL NUTS AND BOLTS SHALL BE STAINLESS STEEL.
9. SLEEVE SHALL BE AS LEVEL AS POSSIBLE.
10. ALL BOLTS SHALL HAVE NEVER SIEZE ON THREADS.

Standard Wet Tap

DATE: JAN 2000
DRAWING NO. WL-410
FILE NO. 00-410

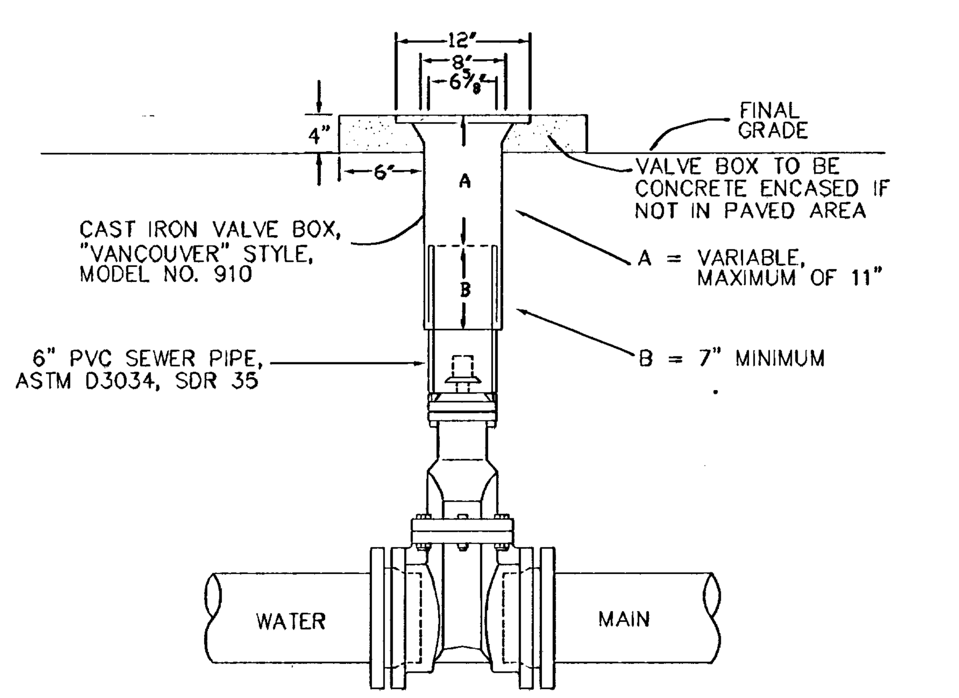

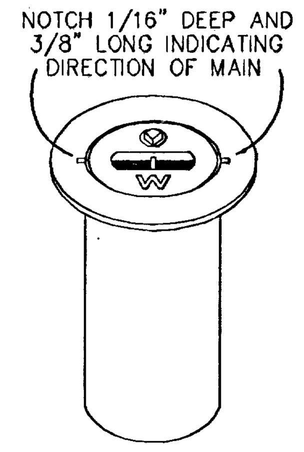

"VANCOUVER" 18" TALL VALVE BOX

NOTES:

1. VALVE BOXES SHALL BE CENTERED DIRECTLY OVER THE VALVE NUT IN A VERTICAL POSITION.
2. VALVE BOX TOP SHALL BE ADJUSTED TO MEET FINISHED GRADE.
3. PVC SHALL BE ONE CONTINUOUS PIECE– NO BELLS OR COUPLERS.
4. ON VALVES 8" AND LARGER, PVC SHALL BE NOTCHED OVER VALVE PACKING BOLTS SO PVC SITS ON BONNET.

Standard Valve Box Detail

DATE: JAN 2000
DRAWING NO. WL-411
FILE NO. 00-411

AS–BUILT PLAN RE–SUBMITTAL– MAY 30, 2008

ARBOR COVE

SITE DETAILS
WATER DETAILS

"AS BUILT DRAWING"
DATE 6/10/08 BY

NO.	DATE	BY	REVISION COMMENTS

Design	Drawn	Checked	Date	Initial Issue Date:
RCR/CLM	LMB	BV		

RECORD DRAWING
BY:
DATE: 6/3/08
Permitted design drawings stamped by:
Mike A. Peebles
Engineer 16682
July 20, 1993

West Hills
DEVELOPMENT
735 SW 158TH AVENUE
BEAVERTON, OR 97006

otak Incorporated
17355 SW Boones Ferry Rd.
Lake Oswego, OR 97035-5217
Phone: (503) 635-3618
FAX: (503) 635-5395
Internet: www.otak.com

14165 C165C603
Project No. Drawing No.
C6.3
Sheet No.

Copyright 2007 ©

LKO: SARAHN 02/29/2008 10:05am --> L:\PROJECT\14100\14165\DWG\C165C603.DWG

XREF LIST
Ltscale: 100
Resolved
C165X001
--Images--
D-1
P-1
S-1

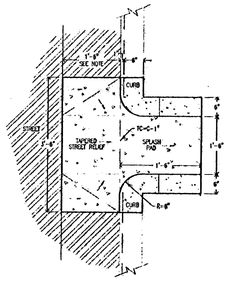

PLAN

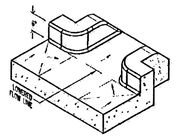

ISOMETRIC

NOTES:

1. Concrete splash pad necessary only where water enters facility.
2. For planters, install washed pea gravel or river rock to transition from splash pad to topsoil.
3. Reference ODOT Standard Detail D 700. Use 1'-6" gutter with bike lanes and 2' gutter without bike lanes or match existing.

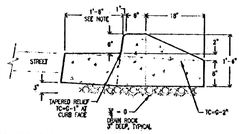

TC = TOP OF CONCRETE
G = GUTTER

SECTION

VEGETATED STORMWATER FACILITIES IN THE PUBLIC RIGHT-OF-WAY

TITLE: CONCRETE INLET DETAILS, TYPE SW
- For Local Service Streets -

SHEET NUMBER: D-1

NO	REVISIONS	DATE	BY
	FINAL DRAFT - SWMDMS	5/16/07	RMB
	DRAFT - SWMDMS	11/16/06	RMB

APPROVED: CHIEF ENGINEER, PWB 2/16/07 DATE; CITY ENGINEER 2/21/07 DATE; CHIEF ENGINEER, PWB 2/20/07 DATE

File name: SWATdwg Mar 01, 2007 - 3:03pm HEDGEC

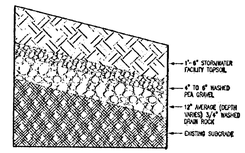

SOIL PROFILE

SOIL NOTES:

1. See City of Portland Standard Construction Specifications Section 01040.14 (g) - Stormwater Facility Topsoil.
2. The soil mix shall consist of 67% sandy loam topsoil and 33% compost material by volume. Topsoil shall be a sandy loam as defined by the USDA soil texture classification. Soil classification and other specifications must be evaluated and reported by an accredited soils testing laboratory and approved by the engineer prior to delivery of topsoil to project site.
3. If no drain rock or pea gravel is specified, excavate native soil 18" below the finish grade of the facility and rototill exposed native soil.
4. Install topsoil in a manner that ensures adequate infiltration. Place in two equal lifts. (If no drain rock is specified rototill the first lift into native soil.) Lifts should not be compacted, but rather placed in a manner to reduce excessive erosion or settlement. Lifts may be lightly watered to encourage natural compaction or, if necessary, rolled with a water-filled landscape roller. Slightly overfill the facility above proposed finished grade to accommodate natural settlement.
5. Pea gravel is specified to separate topsoil from drain rock, when drain rock is specified. Geotextile fabric can be used for this purpose but is prone to clogging when used in combination with soils than have high clay and/or silt content. Geotextile fabric can also be used when there are concerns for lateral flow along the walls of the facility or other specific design concerns.

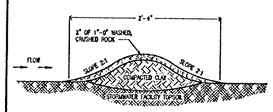

CHECK DAM

CHECK DAM NOTES:

1. Check Dams to be evenly spaced between inlet and outlet. Additional requirements maybe necessary on steep slopes.
2. Additional inlets to be placed downstream of check dams.
3. Height of check dam 2" less than depth of facility typical.

CHECK DAM SPACING & INLET SPACING

Facility Length	Longitudinal Street Slope	# of Check Dams *	Additional Inlets **
30	<=1%	0	None
	>1%	1	None
31 - 50	<=1%	1	None
	>1%	2	1
51 - 70	<=1%	2	1
	>1%	3	2
71-90	<=1%	3	2
	>1%	4	3
91 +	<=1%	4	3
	>1%	5	4

TABLE 1

VEGETATED STORMWATER FACILITIES IN THE PUBLIC RIGHT-OF-WAY

TITLE: SOIL & CHECK DAM DETAILS

SHEET NUMBER: P-1

NO	REVISIONS	DATE	BY
	FINAL DRAFT - SWMDMS	5/16/07	RMB
	DRAFT - SWMDMS	11/16/06	RMB

APPROVED: CHIEF ENGINEER, PWB 2/16/07 DATE; CITY ENGINEER 2/21/07 DATE; CHIEF ENGINEER, PWB 2/20/07 DATE

File name: SWATdwg Mar 01, 2007 - 3:03pm HEDGEC

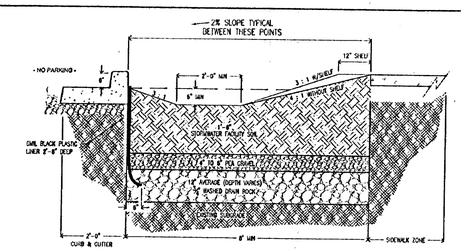

SECTION A-A
SWALE WITHOUT PARKING

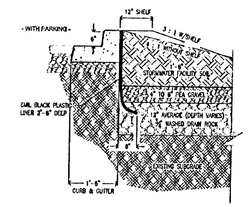

SECTION A-A
SWALE WITH PARKING

VEGETATED STORMWATER FACILITIES IN THE PUBLIC RIGHT-OF-WAY

TITLE: SWALE SECTIONS
- With and Without Parking -

SHEET NUMBER: S-1

NO	REVISIONS	DATE	BY
	FINAL DRAFT - SWMDMS	5/16/07	RMB
	DRAFT - SWMDMS	11/16/06	RMB

APPROVED: CHIEF ENGINEER, PWB 2/16/07 DATE; CITY ENGINEER 2/21/07 DATE; CHIEF ENGINEER, PWB 2/20/07 DATE

File name: SWATdwg Mar 01, 2007 - 3:03pm HEDGEC

NO.	DATE	BY	REVISION COMMENTS

Design: RCR/CLM Drawn: LMB Checked: BV Date: Initial Issue Date:

RECORD DRAWING
BY: [illegible]
DATE: 6/3/08
Permitted design drawings stamped by:
Mike A. Peebles
Engineer 16682
July 20, 1993

West Hills DEVELOPMENT
735 SW 158TH AVENUE
BEAVERTON, OR 97006

"AS BUILT" DRAWING
BY [illegible]
DATE 6/3/08

AS-BUILT PLAN RE-SUBMITTAL- MAY 30, 2008

ARBOR COVE

SITE DETAILS
STORM PLANTER DETAILS

otak Incorporated
17355 SW Boones Ferry Rd.
Lake Oswego, OR 97035-5217
Phone: (503) 635-3618
FAX: (503) 635-5395
Internet: www.otak.com

14165 C165C604
Project No. Drawing No.

C6.4
Sheet No.

Copyright 2007 ©

LXG: SARAHN 02/29/2008 10:05am --> L:\PROJECT\14100\14165\DWG\C165C604.DWG

XREF LIST
Ltscale: 50
Resolved
C165X001
C165X230
0165X190
C165X010
L165X700
L165X006

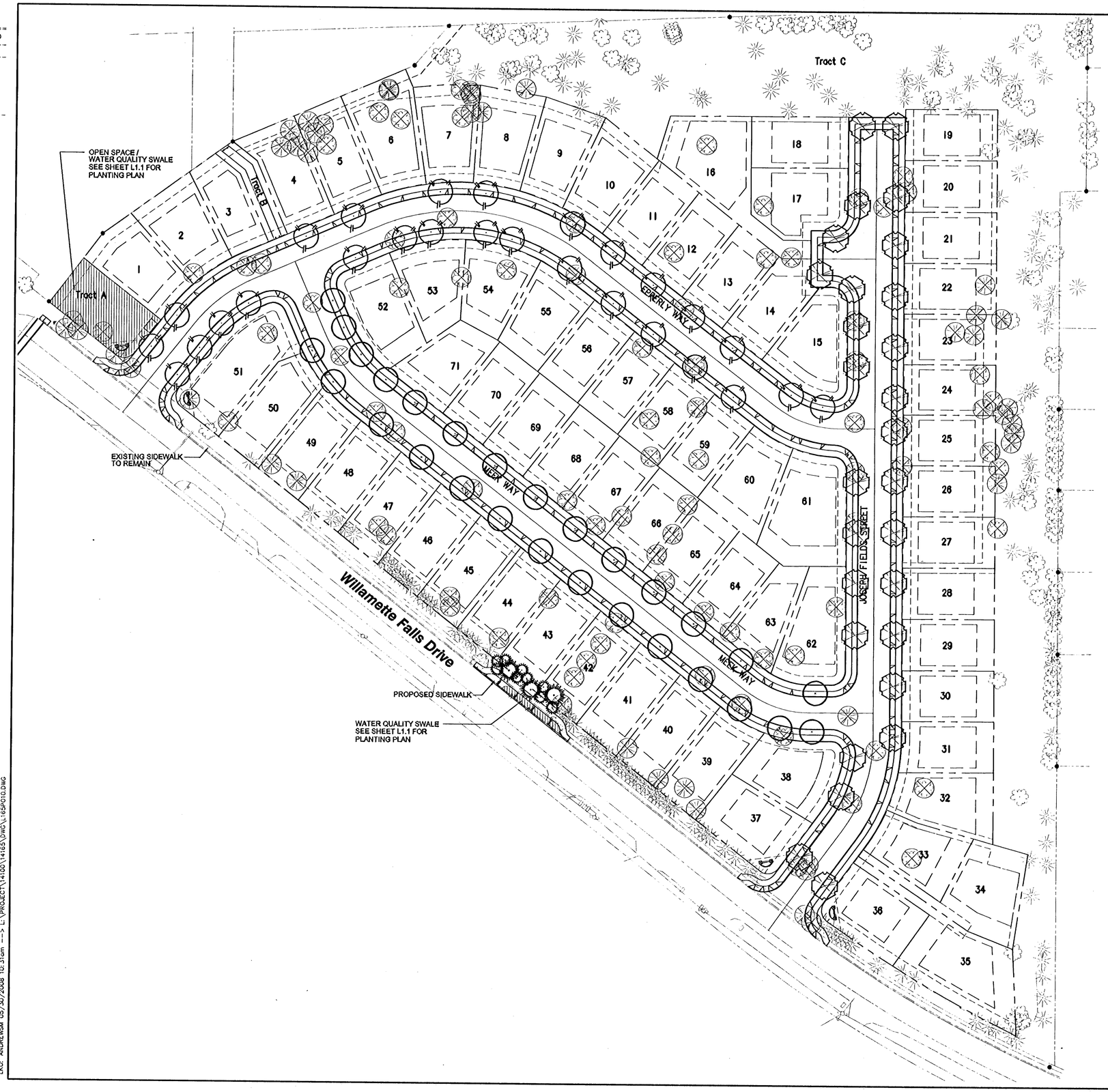

NOTES:

1.) SEE SHEET L1.0 FOR GENERAL PLANTING NOTES.

2.) SEE SHEET L1.0 FOR STREET TREE PLATNING PLAN.

3.) SEE SHEET L1.1 FOR PLANTING DETAILS.

4.) SEE SHEET L1.1 FOR SWALE PLANTING PLAN.

5.) SEE SHEET L1.2 FOR SWALE PLANTING LEGEND.

6.) ALL PLANTER STRIPS TO BE LAWN. SEED WITH HOBBS AND HOPKINS, LTD PRO-TIME 309 SUPREME MIX AS SPECIFIED BY MANUFACTURER.

7.) SEE CIVIL PLANS FOR TREE PROTECTION PLANS, DETAILS, AND NOTES.

8.) REMOVE INVASIVE SPECIES AND POPLARS IN TRACTS A & B, RESEED WITH HOBBS AND HOPKINS, LTD CCOMPANION SEED MIX AT A RATE OF 3-5 LBS / 1000 S.F.

9.) TREATMENT FACILITY INSIDE FENCE TO BE MAINTAINED BY THE CITY OF WEST LINN. OPEN SPACE TO BE MAINTAINED BY HOA OR DEVELOPER.

LEGEND:

EXISTING TREE TO REMAIN

EXISTING TREE TO BE REMOVED

STREET TREE PLANT LEGEND

TREES

SYMBOL	QUANTITY	COMMON NAME / Botanical name:	Size and Description
	28	To Be Determined by City of West Linn:	2" Cal., B&B
	27	To Be Determined by City of West Linn:	2" Cal., B&B
	28	To Be Determined by City of West Linn:	2" Cal., B&B
	9	LODGEPOLE PINE / Pinus contorta var. contorta:	8' Ht.
	3	DOUGLAS FIR / Pseudotsuga menziesii:	8' Ht.

NOTE: REMAINING 71 TREES OF 154 REQUIRED TREES TO BE PLANTED ON LOTS AND OPEN SPACE TRACTS. TREE SPECIES TO BE DETERMINED BY CITY OF WEST LINN. TREES NOT INSTALLED AS OF 5/30/08.

GENERAL PLANTING NOTES:

1. ALL LANDSCAPE AREAS WILL BE PROVIDED WITH AN AUTOMATIC UNDERGROUND IRRIGATION SYSTEM DESIGNED BY CONTRACTOR IN CONFORMANCE TO LOCAL CITY AND STATE CODES. CONTRACTOR WILL PROVIDE MATERIALS AND INSTALL ALL IRRIGATION DOWNSTREAM OF THE EXISTING WATER METER.
2. SEE ENGINEERING DRAWINGS FOR EROSION CONTROL FENCING AND DETAILS.
3. THE LANDSCAPE CONTRACTOR IS TO THOROUGHLY REVIEW THE SITE. IF THERE ARE ANY DISCREPANCIES BETWEEN THE PLAN AND THE EXISTING CONDITIONS THE LANDSCAPE ARCHITECT IS TO BE NOTIFIED IMMEDIATELY.
4. IF THE LANDSCAPE CONTRACTOR STARTS WORK BEFORE SITE CONDITIONS ARE READY, THEY WILL BE RESPONSIBLE FOR ANY ADDITIONAL COSTS RELATING TO THE CONDITION.
5. TOPSOIL: ALL LAWN AREAS AND SHRUB BEDS SHALL HAVE A MINIMUM DEPTH OF 6" OF TOPSOIL. TOPSOIL SHALL BE OVER ROCK-FREE SUBGRADE. TOPSOIL TO BE RIPPED AND TILLED 6" INTO SUBGRADE.
6. MOUND PLANTING BED AREAS 3% GRADE FOR POSITIVE DRAINAGE AND AESTHETICS.
7. SOIL AMENDMENTS: ADD 2" 'GARDEN CARE' COMPOST (OR APPROVED EQUAL) TO TOPSOIL (TILL IN 6") FOR ALL PLANT BEDS.
8. BARK MULCH: SPREAD 2" DEEP FINE GRADE HEMLOCK BARK OVER ALL SHRUB BEDS. KEEP BARK CLEAR OF SHRUB STEM BASE.
9. PROVIDE A 36" DIAMETER LAWN CUT-OUT AROUND TRUNKS OF ALL TREES. PUT BARK MULCH IN TREE CUTOUT.
10. PLANTING POCKETS: REPLACE 1/3 OF EXISTING SOIL FROM PLANTING HOLES WITH 'GARDEN CARE' COMPOST (OR APPROVED EQUAL). MIX THOROUGHLY BEFORE BACK FILLING.
11. PLANT QUANTITIES SHOWN ARE INTENDED TO ASSIST THE CONTRACTOR IN EVALUATING THEIR OWN TAKE OFFS. IF THERE IS A DISCREPANCY BETWEEN PLANT QUANTITIES AND SYMBOLS SHOWN ON THE PLAN, USE THE LARGER OF THE TWO AMOUNTS. CONTRACTOR IS RESPONSIBLE FOR ALL FINAL QUANTITIES.

50' 0' 50' 100'
SCALE IN FEET

NO.	DATE	BY	REVISION COMMENTS

Drawn LAC | Checked KEL | Date | Initial Issue Date:

RECORD DRAWING
BY: [signature]
DATE: 6-03-08
Permitted design drawings stamped by:
Kerry E. Lankford
Landscape
Architect 369
May 09, 1997

West Hills
DEVELOPMENT
735 SW 158TH AVENUE
BEAVERTON, OR 97006

"AS BUILT DRAWING"
DATE 6-3-08 BY [signature]

AS-BUILT PLAN RE-SUBMITTAL- MAY 30, 2008

ARBOR COVE

LANDSCAPE PLAN
STREET TREE PLANTING PLAN

otak Incorporated
17355 SW Boones Ferry Rd.
Lake Oswego, OR 97035-5217
Phone: (503) 635-3618
FAX: (503) 635-5395
Internet: www.otak.com

14165 L165P010
Project No. Drawing No.

L1.0
Sheet No.

Copyright 2007 ©

LKO: ANDREWSM 05/30/2008 10:31am --> L:\PROJECT\14100\14165\DWG\L165P010.DWG

XREF LIST
Utscale: 10
Resolved
C165X001
C165X230
O165X190
C165X010
L165X700
L165X006
L165X701
C165X430

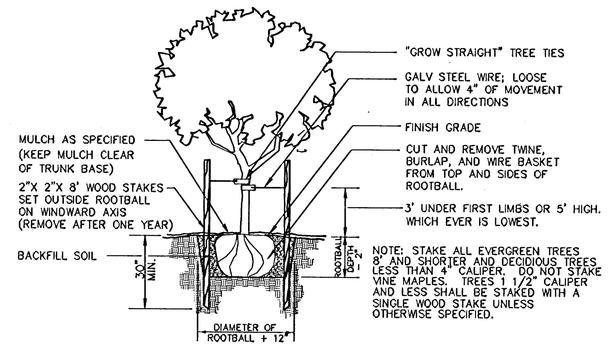

TREE STAKING DETAIL

SCALE: N.T.S

1 / L1.1

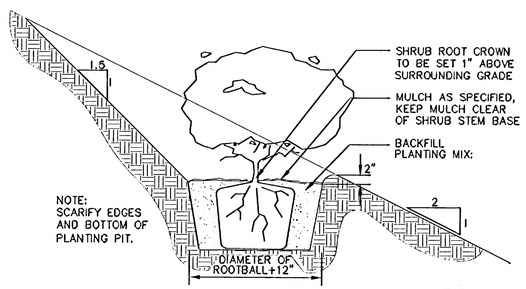

SECTION – PLANTING ON SLOPE

SCALE: N.T.S

2 / L1.1

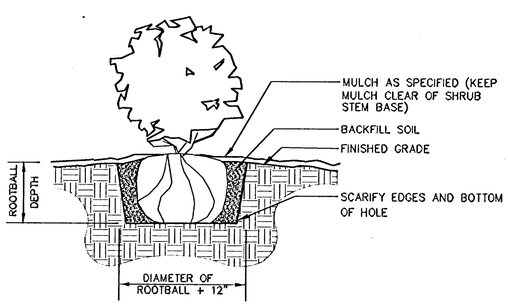

SHRUB PLANTING DETAIL

SCALE: N.T.S

3 / L1.1

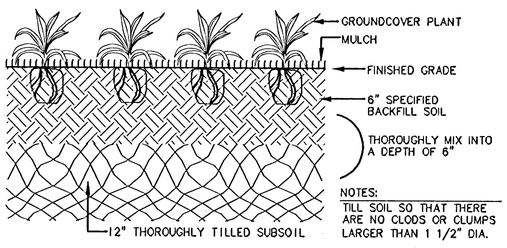

NOTES:
TILL SOIL SO THAT THERE ARE NO CLODS OR CLUMPS LARGER THAN 1 1/2" DIA.

GROUNDCOVER PLANTING DETAIL

SCALE: N.T.S

4 / L1.1

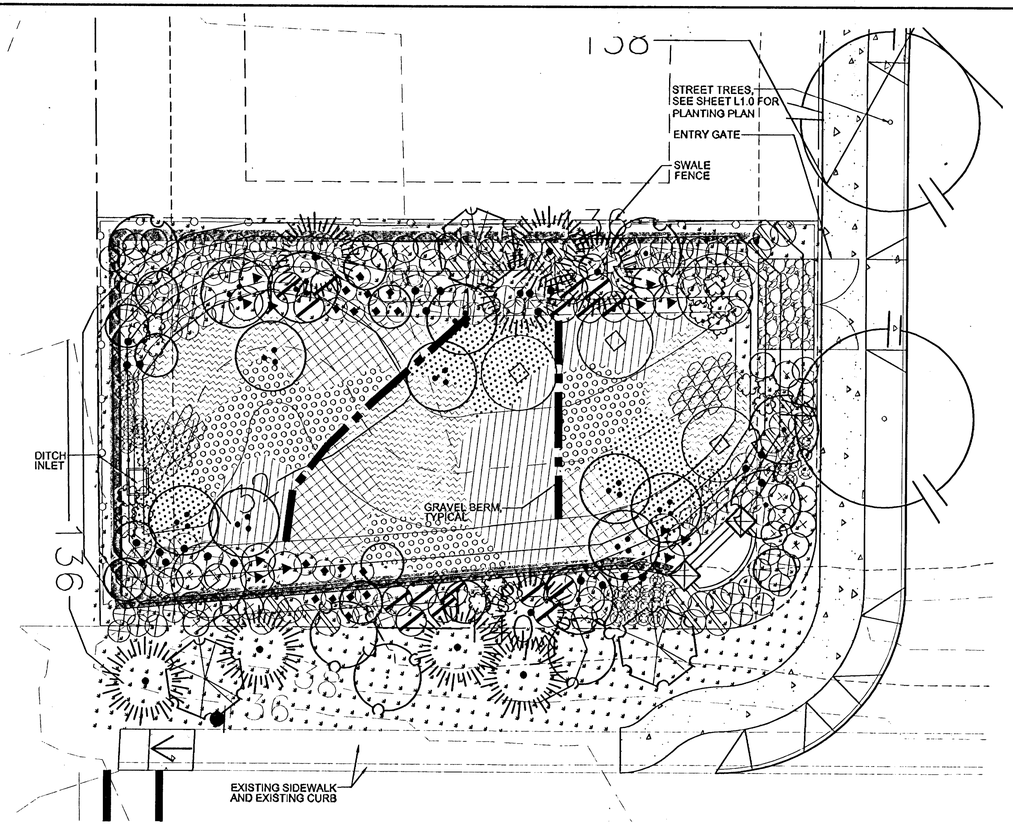

SWALE A

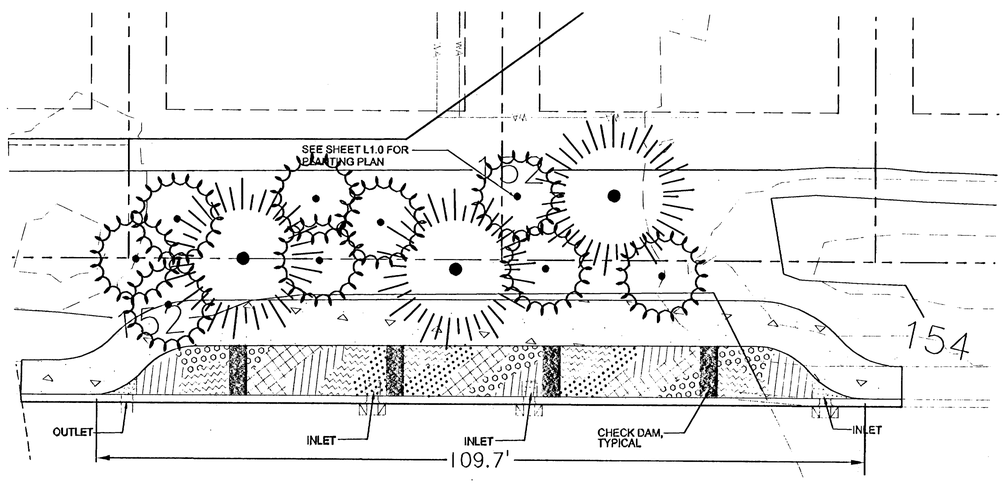

SWALE B

10' 0' 10' 20'
SCALE IN FEET

NOTES:

1.) SEE SHEET L1.0 FOR GENERAL PLANTING NOTES.

2.) SEE SHEET L1.0 FOR STREET TREE PLATNING PLAN.

3.) SEE SHEET L1.1 FOR PLANTING DETAILS.

4.) SEE SHEET L1.1 FOR SWALE PLANTING PLAN.

5.) SEE SHEET L1.2 FOR SWALE PLANTING LEGEND.

6.) ALL PLANTER STRIPS TO BE LAWN. SEED WITH HOBBS AND HOPKINS, LTD PRO-TIME 309 SUPREME MIX AS SPECIFIED BY MANUFACTURER.

7.) SEE CIVIL PLANS FOR TREE PROTECTION PLANS, DETAILS, AND NOTES.

8.) REMOVE INVASIVE SPECIES AND POPLARS IN TRACTS A & B, RESEED WITH HOBBS AND HOPKINS, LTD CCOMPANION SEED MIX AT A RATE OF 3-5 LBS / 1000 S.F.

9.) TREATMENT FACILITY INSIDE FENCE TO BE MAINTAINED BY THE CITY OF WEST LINN. OPEN SPACE TO BE MAINTAINED BY HOA OR DEVELOPER.

LEGEND:

EXISTING TREE TO REMAIN

EXISTING TREE TO BE REMOVED

NO.	DATE	BY	REVISION COMMENTS	Drawn	Checked	Date	Initial Issue Date:
				LAC	KEL		

RECORD DRAWING
BY: Anne Cook
DATE: 6-03-08

Permitted design drawings stamped by:
Kerry E. Lankford
Landscape
Architect 369
May 09, 1997

West Hills DEVELOPMENT
735 SW 158TH AVENUE
BEAVERTON, OR 97006

"AS BUILT DRAWING"
DATE 6-03-08 BY Anne Cook

AS-BUILT PLAN RE-SUBMITTAL- MAY 30, 2008

ARBOR COVE

LANDSCAPE PLAN
WATER QUALITY SWALE PLANTING PLANS
AND PLANTING DETAILS

otak Incorporated
17355 SW Boones Ferry Rd.
Lake Oswego, OR 97035-5217
Phone: (503) 635-3618
FAX: (503) 635-5395
Internet: www.otak.com

14165 L165P011
Project No. Drawing No.

L1.1
Sheet No.

Copyright 2007 ©

LKO: CHADM 06/02/2008 3:04pm --> L:\PROJECT\14100\14165\DWG\L165P011.DWG

XREF LIST
Ltscale: 10
Resolved
C165X001
C165X230
O165X190
C165X010
L165X700
L165X006
L165X701
C165X430

SWALE A PLANTING LEGEND

TREES

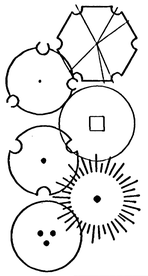

SYMBOL	QUANTITY	COMMON NAME / Botanical name: Size and Description
	3	PACIFIC DOGWOOD / Cornus nuttallii: 1 1/2" Cal., B&B
	3	BIG LEAF MAPLE / Acer macrophyllum: 1 1/2" Cal., B&B
	5	SERVICEBERRY / Amelanchier alnifolia: 1 1/2" Cal., B&B
	6	OREGON WHITE OAK / Quercus garryana: 1 1/2" Cal., B&B
	9	DOUGLAS FIR / Pseudotsuga menziesii: 6' Ht.
	10	RED ALDER / Alnus rubra: 1 1/2" CaL., B&B
TOTAL	36	NUMBER OF POND TREES REQUIRED: 2625 S.F./100 S.F.= 26 1 TREE X 26= 26 TREES

LARGE SHRUBS / SMALL TREES

SYMBOL	QUANTITY	COMMON NAME / Botanical name: Size and Description
	11	VINE MAPLE / Acer circinatum: 5 Gal.
	17	MOCK-ORANGE / Philadelphus lewisii: 5 Gal.
	28	INDIAN PLUM / Oemleria cerasiformis: 5 Gal.
	32	OCEANSPRAY / Holodiscus discolor: 5 Gal.
	12	BLUE ELDERBERRY / Sambucus cerulea: 5 Gal.
	36	NOOTKA ROSE / Rosa nutkana: 5 Gal.
TOTAL	136	NUMBER OF POND SHRUBS REQUIRED: 2625 S.F./100 S.F.=26 4 SHRUBS X 26 = 104 SHRUBS

SHRUBS

SYMBOL	QUANTITY	COMMON NAME / Botanical name: Size and Description
	36	RED FLOWERING CURRENT / Ribes sanguineum: 1 Gal.
	16	OREGON GRAPE / Mahonia nervosa: 3 Gal.
	28	SNOWBERRY / Symphorocarpus alba: 3 Gal.
	21	PACIFIC NINEBARK / Physocarpus capitatus: 3 Gal.
	23	RED TWIG DOGWOOD / Cornus sericea: 3 Gal.
	16	SHINY LEAF SPIRAEA / Spiraea betulifolia: 3 Gal.
	26	SALAL / Gaultheria shallon: 3 Gal.
TOTAL	166	NUMBER OF POND SHRUBS REQUIRED: 2625 S.F./100 S.F.=26 6 SHRUBS X 26 = 156 SHRUBS

GROUND COVER PLANTS

SYMBOL	QUANTITY	COMMON NAME / Botanical name: Size and Description
	164	SLOUGH SEDGE / Carex obnupta': 4" Pots 379 S.F. / 3.1 S.F. Coverage at maturity = 122 – 4" Pot Emergents
	347	SMALL FRUITED BULRUSH / Scirpus microcarpus: 4" Pots 670 S.F. / 1.8 S.F. Coverage at maturity = 372 – 4" Pot Emergents
	256	CREEPING SPIKE RUSH / Eleocharis palustris: 4" Pots 388 S.F. / 1.8 S.F. Coverage at maturity = 216 – 4" Pot Emergents
	269	GROOVED RUSH / Juncus patens: 4" Pots 614 S.F. / 1.8 S.F. Coverage at maturity = 341 – 4" Pot Emergents
	538	TUFTED HAIRGRASS / Deschampsia cespitosa: 1 Gal. 459 S.F. / .8 SF Coverage at maturity= 574 – 1 Gal. Emergents
TOTAL	1574	2517 S.F. TREATMENT AREA / 100 = 25, 25 X 20 1 GAL = 500 AND 25 X 40 4" POTS = 1000. 500 – 1 GAL. + 1000 – 4" POTS = 1500 TOTAL EMERGENTS

GRASS SEED MIX

(BY HOBBS & HOPKINS LTD.)

'COMPANION' SEED MIX	3-5 LBS. / 1000 S. F.
PR8820 DWARF PERENNIAL RYEGRASS / LOLIUM PERENNE 'PR8820'	80%
CREEPING RED FESCUE / FESTUCA RUBRA	20%
TOTAL 3977 S.F. (.09 ACRES)	

SWALE B PLANTING LEGEND

GROUND COVER PLANTS

SYMBOL	QUANTITY	COMMON NAME / Botanical name: Size and Description
	32	SLOUGH SEDGE / Carex obnupta': 4" Pots 99 S.F. / 3.1 S.F. Coverage at maturity = 32 – 4" Pot Emergents
	53	SMALL FRUITED BULRUSH / Scirpus microcarpus: 4" Pots 96 S.F. / 1.8 S.F. Coverage at maturity = 53 – 4" Pot Emergents
	44	CREEPING SPIKE RUSH / Eleocharis palustris: 4" Pots 79 S.F. / 1.8 S.F. Coverage at maturity = 44 – 4" Pot Emergents
	34	GROOVED RUSH / Juncus patens: 4" Pots 61 S.F. / 1.8 S.F. Coverage at maturity = 34 – 4" Pot Emergents
	85	TUFTED HAIRGRASS / Deschampsia cespitosa: 1 Gal. 68 S.F. / .8 SF Coverage at maturity= 68 – 1 Gal. Emergents
TOTAL	248	404 S.F. TREATMENT AREA / 100 = 4, 4 X 20 1 GAL = 80 AND 4 X 40 4" POTS = 160. 80 – 1 GAL. + 160 – 4" POTS = 240 TOTAL EMERGENTS

NOTES

1. SWALE PLANT MATERIAL SHALL BE PROVIDED WITH A TEMPORARY AUTOMATIC IRRIGATION SYSTEM DESIGNED BY CONTRACTOR. CONTRACTOR WILL PROVIDE MATERIALS AND INSTALL ALL IRRIGATION DOWNSTREAM OF THE WATER METER. TEMPORARY IRRIGATION SYSTEM SHALL BE MAINTAINED A MINIMUM OF THREE (3) GROWING SEASONS.

2. TREE AND SHRUB QUANTITIES DERIVED FROM CITY OF PORTLAND STORMWATER MANAGEMENT AND GROUNDCOVER EMERGENT QUANITIES DERIVED FROM CITY OF GRESHAM GREEN DEVELOPMENT PRACTICES FOR SUSTAINABLE STORMWATER MANAGEMENT.

NOTES:

1.) SEE SHEET L1.0 FOR GENERAL PLANTING NOTES.

2.) SEE SHEET L1.0 FOR STREET TREE PLATNING PLAN.

3.) SEE SHEET L1.1 FOR PLANTING DETAILS.

4.) SEE SHEET L1.1 FOR SWALE PLANTING PLAN.

5.) SEE SHEET L1.2 FOR SWALE PLANTING LEGEND.

6.) ALL PLANTER STRIPS TO BE LAWN. SEED WITH HOBBS AND HOPKINS, LTD PRO-TIME 309 SUPREME MIX AS SPECIFIED BY MANUFACTURER.

7.) SEE CIVIL PLANS FOR TREE PROTECTION PLANS, DETAILS, AND NOTES.

8.) REMOVE INVASIVE SPECIES AND POPLARS IN TRACTS A & B, RESEED WITH HOBBS AND HOPKINS, LTD CCOMPANION SEED MIX AT A RATE OF 3-5 LBS / 1000 S.F.

9.) TREATMENT FACILITY INSIDE FENCE TO BE MAINTAINED BY THE CITY OF WEST LINN. OPEN SPACE TO BE MAINTAINED BY HOA OR DEVELOPER.

LEGEND:

EXISTING TREE TO REMAIN

EXISTING TREE TO BE REMOVED

NO.	DATE	BY	REVISION COMMENTS

Design LAC
Drawn LAC
Checked KEL
Date
Initial issue Date:

RECORD DRAWING
BY: [signature]
DATE: 6-03-08
Permitted design drawings stamped by:
Kerry E. Lankford
Landscape Architect
369
May 09, 1997

West Hills DEVELOPMENT
735 SW 158TH AVENUE
BEAVERTON, OR 97006

"AS BUILT DRAWING"
DATE 6/03/08 BY [signature]

AS-BUILT PLAN RE-SUBMITTAL- MAY 30, 2008

ARBOR COVE
LANDSCAPE PLAN
SWALE PLANTING LEGENDS

otak Incorporated
17355 SW Boones Ferry Rd.
Lake Oswego, OR 97035-5217
Phone: (503) 635-3618
FAX: (503) 635-5395
Internet: www.otak.com

14165 L165P012
Project No. Drawing No.
L1.2
Sheet No.

Copyright 2007 ©

LKO: SARAHN 02/29/2008 10:19am ---> L:\PROJECT\14100\14165\DWG\L165P012.DWG

XREF LIST
Uiscale: 60
Resolved
C165X001
C165X600
C165X230
C165X010
0165X190
STREETLIGHTING 072407
Unresolved
northstar

GENERAL NOTES:

1. SEE EL2.0 AND EL3.0 FOR STREET LIGHT NOTES AND DETAILS
2. STREET LIGHTING LOCATION AND DESIGN PROVIDED BY NORTHSTAR ELECTRIC

NorthStar
Electrical Contractors

Northstar Electrical Contractors
19450 S.W. Cipole Road, Suite 107
Tualatin, Oregon 97062-7111
Phone 503-612-0840
Fax 503-612-0891
Email ltgdesign@NorthStarElect.com

LEGEND:

EXISTING

STORM DRAIN — SD
WATER LINE — W
SANITARY SEWER — SS
STORM MANHOLE
STORM CATCH BASIN
GAS LINE — G
TELEPHONE LINE — T
TELEPHONE MANHOLE
WATER VALVE
TV LINE — T.V.
POWER LINE — E
STREET LIGHT
FIRE HYDRANT
WATER METER
SANITARY MANHOLE
STORM DRAIN MANHOLE

PROPOSED

STORM DRAIN — SD
STORM LATERAL
STORM MANHOLE
STORM CATCH BASIN
SANITARY SEWER — SS
SANITARY LATERAL
SANITARY MANHOLE
WATER LINE — W
FIRE HYDRANT
GATE VALVE
WATER METER (SINGLE)
STREET LIGHT
STREET LIGHT

STREET LIGHT LOCATION CHART

LIGHT	STREET	STATION (OFFSET)	LUMINAIRE TYPE
SL-1	JOSEPH FIELDS ST.	1+45.52 (18.29'RT)	LP-1*
SL-2	JOSEPH FIELDS ST.	3+34.02 (18.41'RT)	LP-1*
SL-3	JOSEPH FIELDS ST.	4+84.01 (20.00'RT)	LP-1*
SL-4	JOSEPH FIELDS ST.	6+57.67 (20.32'LT)	LP-1*
SL-5	JOSEPH FIELDS ST.	8+34.01 (20.38'RT)	LP-1*
SL-6	MEEK WAY	7+13.06 (19.02'RT)	LP-1*
SL-7	MEEK WAY	5+61.39 (19.19'RT)	LP-1*
SL-8	MEEK WAY	3+76.53 (19.45'LT)	LP-1*
SL-9	MEEK WAY	2+17.32 (18.69'RT)	LP-1*
SL-10	EPPERLY WAY	1+46.82 (18.75'RT)	LP-1*
SL-11	EPPERLY WAY	3+11.24 (20.40'LT)	LP-1*
SL-12	EPPERLY WAY	4+70.74 (18.18'LT)	LP-1*
SL-13	EPPERLY WAY	6+37.02 (19.09'LT)	LP-1*
SL-14	EPPERLY WAY	8+21.33 (20.30'RT)	LP-1*
OSL-1	WFD	8+97.93 (28.06'LT)	LP-2*
OSL-2	WFD	10+64.09 (24.42'RT)	LP-3*
OSL-3	WFD	10+92.75 (30.83'LT)	LP-2*
OSL-4	WFD	13+20.76 (23.72'RT)	LP-3*
OSL-5	WFD	14+53.16 (29.05'LT)	LP-2*
OSL-6	WFD	16+09.25 (19.98'RT)	LP-3*
OSL-7	WFD	17+49.95 (24.61'RT)	LP-3*
OSL-8	WFD	19+15.14 (23.64'RT)	LP-3*
OSL-9	WFD	20+73.74 (22.70'RT)	LP-3*

*SEE SHEET EL2.0 FOR LUMINAIRE SCHEDULE AND LUMINAIRE TYPE

NO.	DATE	BY	REVISION COMMENTS

Design	Drawn	Checked	Date
RCR/CLM	LMB	BV	Initial Issue Date:

RECORD DRAWING
BY: Mike Peebles
DATE: 6/3/08
Permitted design drawings stamped by:
Mike A. Peebles
Engineer 16682
July 20, 1993

West Hills DEVELOPMENT
735 SW 158TH AVENUE
BEAVERTON, OR 97006

"AS BUILT DRAWING"
BY: [illegible]
DATE: 6/26/08

AS-BUILT PLAN RE-SUBMITTAL- MAY 30, 2008

ARBOR COVE

STREET LIGHTING PLAN
STREET LIGHTING AND DETAILS

otak Incorporated
17355 SW Boones Ferry Rd.
Lake Oswego, OR 97035-5217
Phone: (503) 635-3618
FAX: (503) 635-5395
Internet: www.otak.com

14165 C165EL01
Project No. Drawing No.
EL1.0
Sheet No.

Copyright 2007 ©

LKD: DEREKW 10/22/2007 1:30pm --> L:\PROJECT\14100\14165\DWG\C165EL01.DWG

XREF LIST
Utscale: 60
Resolved
C165X001
C165X600
C165X230
C165X010
0165X190
--Images--
North~tarLogo
WL-517
WL-518

LUMINAIRE MOUNTED ON EXISTING POLE

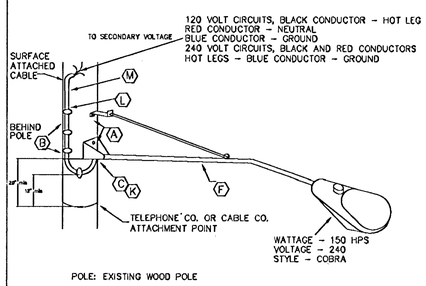

POLE: EXISTING WOOD POLE

MAST ARM INSTALLATION DRAWING
NEW CONSTRUCTION WHERE VOLTAGE
IS LIMITED TO 300 VOLTS

ITEM	DESCRIPTION
A	Bolt,Mach.,Galv.,5/8"x12"
B	Washer, Flat 3/16"x2-1/4"
C	Screw, Lag, 1/2"x4-1/2"
F	Arm, Mast, Upswept - 8'
K	Bushing, Insulation 1-1/4"
L	Staples - Flat Head Type
M	Wire,#10 TC 3 Conductor

Mast Arm Detail

West Linn

DATE: JAN 2000
DRAWING NO. WL-517
FILE NO. 00-517

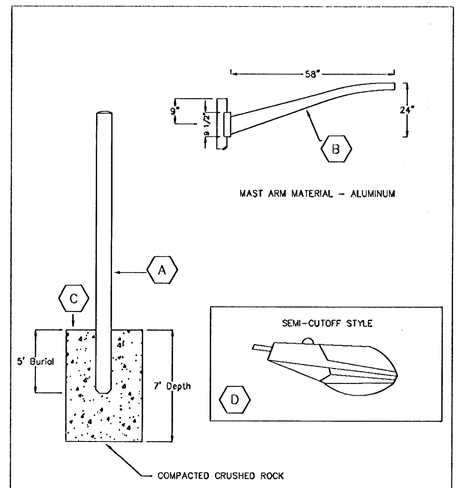

ITEM	DESCRIPTION
A	25' Gray Fiberglass Pole
B	5' Aluminum Mast Arm
C	Compacted Crushed Rock
D	100 W HPS Roadway Lamp (Will Vary Depending on Lighting Requirement)

Standard Street Light

West Linn

DATE: JAN 2000
DRAWING NO. WL-518
FILE NO. 00-518

LIGHT LEVEL REQUIREMENTS

ROADWAY	CLASSIFICATION		LIGHT LEVEL	UNIFORMITY
INTERIOR STREETS	LOCAL	TARGET	0.4 FC AVG	6:1 AVG/MIN
		ACHIEVED	0.42 FC	4.20:1
WILLAMETTE FALLS DRIVE	COLLECTOR	TARGET	0.6 FC AVG	4:1 AVG/MIN
		ACHIEVED	0.67 FC	3.35:1

LUMINAIRE SCHEDULE
PROJECT: ARBOR COVE

QTY	LABEL	DESCRIPTION	WATTS	LUMENS	ARM	ARRANGEMENT	LLF
14	LP1-PROPOSED STREETLIGHT	HPS, 'SHOEBOX' STYLE LUMINAIRE MOUNTED ON A 25' MOUNTING HEIGHT BRONZE FIBERGLASS POLE	100	9500	1	SINGLE	0.690
3	LP2-PROPOSED STREETLIGHT	HPS, 'COBRA' STYLE, FLAT LENS LUMINAIRE MOUNTED ON A 30' MOUNTING HEIGHT GRAY FIBERGLASS POLE	150	16000	6	SINGLE	0.690
6	LP3-PROPOSED STREETLIGHT	HPS, 'COBRA' STYLE, FLAT LENS LUMINAIRE MOUNTED 30' ON A WOOD POWER POLE	150	16000	6	SINGLE	0.690

NUMERIC SUMMARY
PROJECT: ARBOR COVE

LABEL	CALC TYPE	UNITS	AVG	MAX	MIN	AVG/MIN	MAX/MIN
INTERIOR STREETS	ILLUMINANCE	Fc	0.42	2.2	0.1	4.20	22.00
WILLAMETTE FALLS DRIVE	ILLUMINANCE	Fc	0.67	2.97	0.2	3.35	14.85

Northstar Electrical Contractors
19450 S.W. Cipole Road, Suite 107
Tualatin, Oregon 97062-7111
Phone 503-612-0840
Fax 503-612-0891
Email ltgdesign@NorthStarElect.com

Northstar Electrical Contractors
19450 S.W. Cipole Road, Suite 107
Tualatin, Oregon 97062-7111
Phone 503-612-0840
Fax 503-612-0891
Email ltgdesign@NorthStarElect.com

NO.	DATE	BY	REVISION COMMENTS

Design RCR/CLM | Drawn LMB | Checked BV | Date | Initial Issue Date:

RECORD DRAWING
BY: MAW
DATE: 6/3/08
Permitted design drawings stamped by:
Mike A. Peebles
Engineer 16682
July 20, 1993

West Hills DEVELOPMENT
733 SW 158TH AVENUE
BEAVERTON, OR 97006

"AS BUILT DRAWING"
DATE 6/3/08 BY

AS-BUILT PLAN RE-SUBMITTAL- MAY 30, 2008

ARBOR COVE
STREET LIGHTING PLAN
STREET LIGHTING AND DETAILS

otak Incorporated
17355 SW Boones Ferry Rd.
Lake Oswego, OR 97035-5217
Phone: (503) 635-3618
FAX: (503) 635-5395
Internet: www.otak.com

Project No. 14165 Drawing No. C165EL02

Sheet No. EL2.0

Copyright 2007 ©

LKO: SARAHN 02/29/2008 10:21am --> L:\PROJECT\14100\14165\DWG\C165EL02.DWG

XREF LIST
Ltscale: 60
Resolved
C165X001
C165X230
C165X010
O165X190
STREETLIGHTING 072407
Unresolved
northstar
--Images--
North~tarLogo
North~rLogo_1

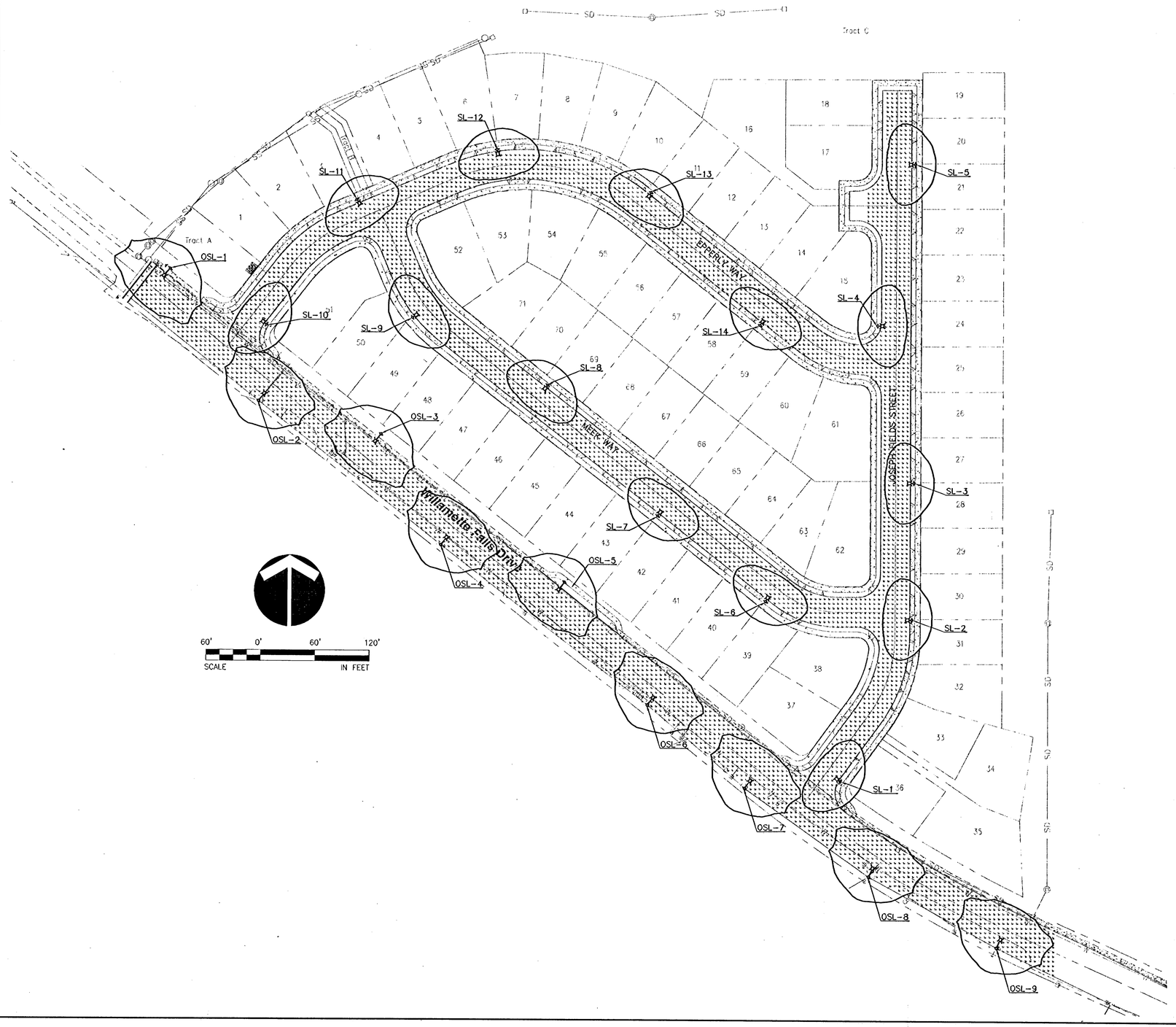

GENERAL NOTES:

1. SEE EL1.0 AND EL2.0 FOR STREET LIGHT NOTES AND DETAILS
2. STREET LIGHTING LOCATION AND DESIGN PROVIDED BY NORTHSTAR ELECTRIC

Northstar Electrical Contractors
19450 S.W. Cipole Road, Suite 107
Tualatin, Oregon 97062-7111
Phone 503-612-0840
Fax 503-612-0891
Email ltgdesign@NorthStarElect.com

LEGEND:

EXISTING

STORM DRAIN
WATER LINE
SANITARY SEWER
STORM MANHOLE
STORM CATCH BASIN
GAS LINE
TELEPHONE LINE
TELEPHONE MANHOLE
WATER VALVE
TV LINE
POWER LINE
STREET LIGHT
FIRE HYDRANT
WATER METER
SANITARY MANHOLE
STORM DRAIN MANHOLE

PROPOSED

STORM DRAIN
STORM LATERAL
STORM MANHOLE
STORM CATCH BASIN
SANITARY SEWER
SANITARY LATERAL
SANITARY MANHOLE
WATER LINE
FIRE HYDRANT
GATE VALVE
WATER METER (SINGLE)
STREET LIGHT
STREET LIGHT

STREET LIGHT LOCATION CHART

LIGHT	STREET	STATION (OFFSET)	LUMINAIRE TYPE
SL-1	JOSEPH FIELDS STREET	1+45.52 (18.29'RT)	LP-1*
SL-2	JOSEPH FIELDS STREET	3+34.02 (18.41'RT)	LP-1*
SL-3	JOSEPH FIELDS STREET	4+84.01 (20.00'RT)	LP-1*
SL-4	JOSEPH FIELDS STREET	6+57.67 (20.32'LT)	LP-1*
SL-5	JOSEPH FIELDS STREET	8+34.01 (20.38'RT)	LP-1*
SL-6	MEEK WAY	7+13.06 (19.02'RT)	LP-1*
SL-7	MEEK WAY	5+61.39 (19.19'RT)	LP-1*
SL-8	MEEK WAY	3+76.53 (19.45'LT)	LP-1*
SL-9	MEEK WAY	2+17.32 (18.69'RT)	LP-1*
SL-10	EPPERLY WAY	1+46.82 (18.75'RT)	LP-1*
SL-11	EPPERLY WAY	3+11.24 (20.40'LT)	LP-1*
SL-12	EPPERLY WAY	4+70.74 (18.18'LT)	LP-1*
SL-13	EPPERLY WAY	6+37.02 (19.09'LT)	LP-1*
SL-14	EPPERLY WAY	8+21.33 (20.30'RT)	LP-1*
OSL-1	WFD	8+97.93 (28.06'LT)	LP-2*
OSL-2	WFD	10+64.09 (24.42'RT)	LP-3*
OSL-3	WFD	10+92.75 (30.83'LT)	LP-2*
OSL-4	WFD	13+20.76 (23.72'RT)	LP-3*
OSL-5	WFD	14+53.16 (29.05'LT)	LP-2*
OSL-6	WFD	16+09.25 (19.98'RT)	LP-3*
OSL-7	WFD	17+49.95 (24.61'RT)	LP-3*
OSL-8	WFD	19+15.14 (23.64'RT)	LP-3*
OSL-9	WFD	20+73.74 (22.70'RT)	LP-3*

*SEE SHEET EL2.0 FOR LUMINAIRE SCHEDULE AND LUMINAIRE TYPE

NO.	DATE	BY	REVISION COMMENTS

Design RCV/CLM Drawn LMB Checked BV Date Initial Issue Date:

RECORD DRAWING
BY: [signature]
DATE: 6/3/08
Permitted design drawings stamped by:
Mike A. Peebles
Engineer 16682
July 20, 1993

West Hills DEVELOPMENT
735 SW 158TH AVENUE
BEAVERTON, OR 97006

"AS BUILT" DRAWING
BY [signature]
DATE 6/4/08

AS-BUILT PLAN RE-SUBMITTAL- MAY 30, 2008

ARBOR COVE

STREET LIGHTING PLAN
STREET LIGHTING DIAGRAM

otak Incorporated
17355 SW Boones Perry Rd.
Lake Oswego, OR 97035-5217
Phone: (503) 635-3618
FAX: (503) 635-5395
Internet: www.otak.com

14165 C165EL03
Project No. Drawing No.
EL3.0
Sheet No.

Copyright 2007 ©

LKO: CHADM 02/29/2008 3:13pm --> L:\PROJECT\14100\14165\DWG\C165EL03.DWG